April 14, 1964 L. S. KUNETKA 3,128,700

STRUCTURE FOR MOUNTING RUBBER PRINTING PLATES FOR PRINTING ON CORRUGATED AND THE LIKE BOARD

Filed May 11, 1961 2 Sheets-Sheet 1

Fig. 1.

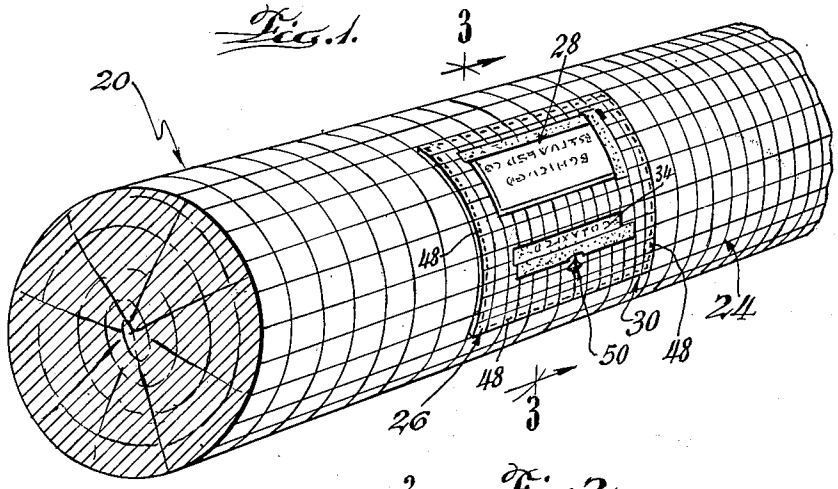

Fig. 2.

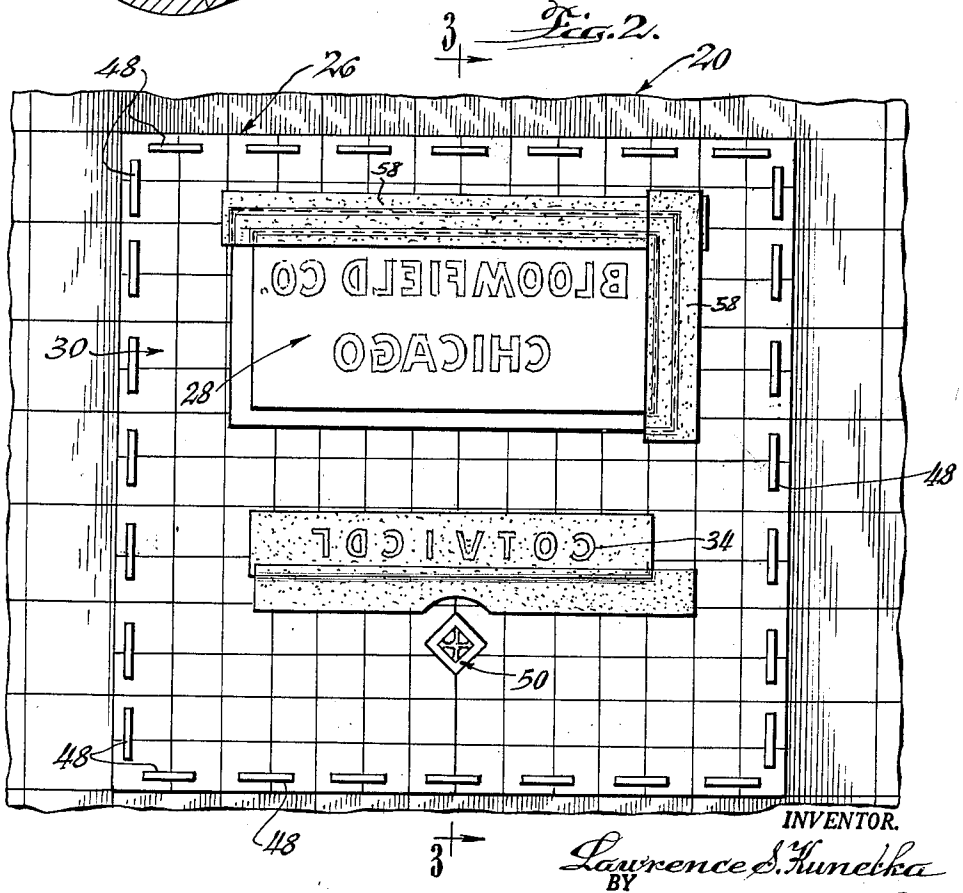

INVENTOR.
Lawrence S. Kunetka
BY
Silverman, Mullin & Cass
Attorneys.

April 14, 1964 L. S. KUNETKA 3,128,700

STRUCTURE FOR MOUNTING RUBBER PRINTING PLATES FOR PRINTING ON CORRUGATED AND THE LIKE BOARD

Filed May 11, 1961 2 Sheets-Sheet 2

Fig. 4.

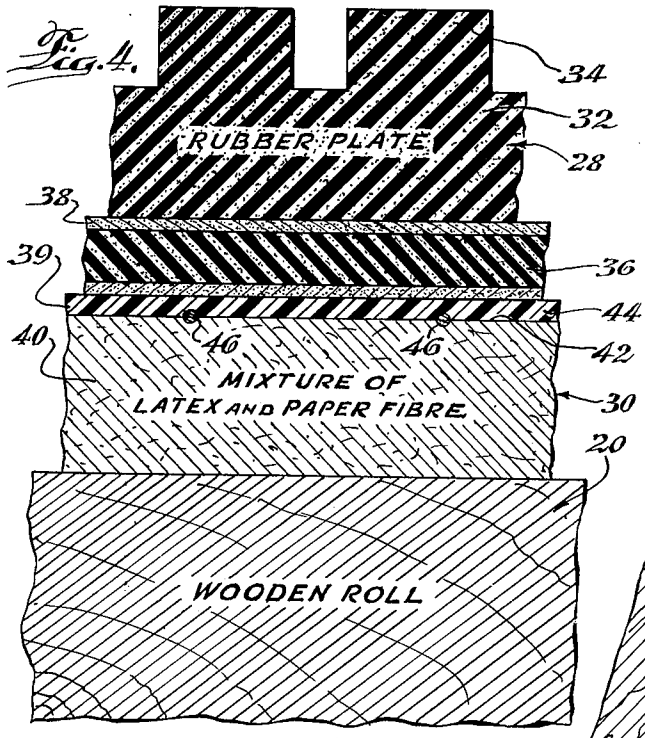

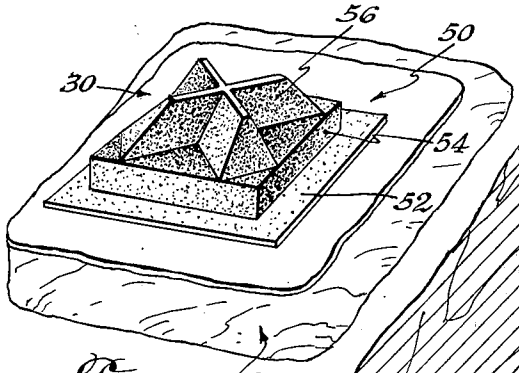

Fig. 5.

Fig. 3.

INVENTOR.
Lawrence S. Kunetka
BY
Silverman, Mullin & Cass
Attorneys

United States Patent Office

3,128,700

Patented Apr. 14, 1964

3,128,700

STRUCTURE FOR MOUNTING RUBBER PRINTING PLATES FOR PRINTING ON CORRUGATED AND THE LIKE BOARD

Lawrence S. Kunetka, Chicago, Ill., assignor to Jefferson State Bank, Chicago, Ill., an Illinois banking association

Filed May 11, 1961, Ser. No. 109,379

1 Claim. (Cl. 101—379)

This invention relates generally to the typographic arts and more particularly, relates to an improved mounting structure for rubber printing plates of the kind used to print on corrugated paperboard or the like and ancillary thereto, to provide an improved index device for achieving proper registration of impressions from a rubber printing plate mounted on the said structure.

In the art of printing upon sheet material which is easily crushed and weakened by the printing plate, such as corrugated paper and the like, it has been customary to use rubber printing plates the type face of which has been cut manually or otherwise and to mount the printing plate on a flexible backing member which, in turn, is mechanically fastened on the circumference of the printing cylinder or roller of the press. Prior to the printing run, it is necessary always to adjust the position of the rubber printing plate relative to the backing member in order to achieve proper registration of the imprint on the corrugated board. Accordingly, the rubber printing plate is removably secured on the backing member by means of a suitable pressure sensitive adhesive having sufficient adhesive strength to prevent movement of the printing plate on the backing member during printing and yet which will permit the printing plate to be removed for adjusting registration, substituting other printing plates or other reason occasioned by the printing process. Also, the printing plates and backing members are subjected to printing inks and ink solvents and washes during the printing process which are penetrating and corrosive in character.

Heretofore, several different materials have been used for such backing structures; however, these have been entirely unsatisfactory for diverse reasons. One such material was a flexible, laminated paperboard. In order to realize sufficient strength and body for such a backing member, it was considered necessary to use a relatively stiff paper material having the fibers thereof running in one direction for imparting desired strength. Further, such sheet material usually available was approximately 10/1000th of an inch thick and since the desired thickness of the backing member normally exceeded 10/1000th of an inch, it was necessary to produce a multiple-ply sheet by laminating additional thicknesses of such material. This paperboard backing member was relatively stiff and did not bend readily in a direction transverse to the length thereof, which would be in a direction parallel to the axis of the printing roller on which it was to be mounted. Because it was necessary to remove the printing plate from the backing member for purposes of registration adjustments, the strong adhesive employed frequently caused the relatively soft surface of the paper backing member to peel when the printing plate was stripped off. This not only made re-attachement of the printing plate on the paperboard backing member very difficult, but was time consuming and resulted in an uneven mounting surface on the backing member. As a result, when re-affixing the rubber printing plate on such an irregular surface, the type face of the printing plate was improperly located relative to the printing roller or cylinder and gave rise to unevenness of printing and uneven wear on the type faces of the rubber printing plate. Such irregularities in the printing surface of the rubber plate also caused the undesirable condition of non-uniform pressure being applied to the corrugated board by the printing plate which, in many instances, resulted in crushed or ruptured corrugated board surfaces where the ink was applied from the printing plate.

Another difficult problem which arose in connection with the use of such a paperboard backing member was in connection with the penetrating character of the printing inks and the solvents and washes used to remove the ink from the rubber type. Because the mounting surface of the backing member was soft and relatively porous, the inks and solvents readily penetrated the paperboard member and seeped between the rubber printing plate and the backing member with resulting undesirable eruptions on the mounting surface and separation of the laminations of the multi-ply paperboard member. This adverse condition further was encouraged by the rather stiff character of the backing member which limited the flexibility thereof and facilitated cracking and rupturing of the mounting surface of the backing member transverse to the length thereof. The resulting fissures in the mounting surface of the backing member permitted such inks, washes and solvents to be absorbed readily and easily and thereby limited the extent of which such backing member could be used repeatedly.

Another type of material which was used for such backing members was a fabric material. The fabric backing members also were disadvantageous because they were likely to tear readily and could not be made with a sufficiently hard and non-porous mounting surface so that they absorbed printing inks, washes and solvents commonly used in such printing processes. In order to obtain sufficient body for the backing member, a relatively stiff fabric was used which interfered with realizing an even printing or type face when the printing plate was secured on the backing member. Also, frequent stripping of the printing plate from the backing member for registration purposes further rendered the surface of the fabric member uneven and irregular with attendant disadvantages.

Another type of material heretofore employed consisted of a sheet of plastic. Such plastic material was relatively thin in order to obtain the desired flexibility for the purpose of mounting same on the circumference of the cylinder but, as a result, the material was too flexible, did not have sufficient body and readily stretched and buckled especially after successive uses thereof. Thus, the plastic backing members would shrink or stretch, that is, vary in dimension thereof and would therefore prevent proper registration adjustments to be obtained and maintained.

Although these various materials have been used for such backing members, in no instance was it possible to successfully provide a grid or ruled surface thereon for assisting in adjustments for registration. It was common to provide such grids on the printing rollers for positioning the backing member. However, because imprinting of the grid on the backing members of previous structures would be obliterated, washed or worn away, they were not employed in connection with any of the backing members heretofore used. Consequently, proper adjustment of the printing plate on the backing member was a matter of repeated guess-work and trial-and-error procedure which further encouraged unevenness and irregularities in the mounting surface of the backing member.

Consequently, it is a major object of the invention to provide a structure of the character described for mounting rubber printing plates which will substantially obviate the disadvantages hereinabove enumerated.

A primary object of the invention is to provide a backing member for mounting rubber printing plates having a grid or ruled surface which will not be obliterated or washed off during normal use of the printing plate.

Another object of the invention is to provide a backing structure of the character described having a hard mounting surface conducive to adhesion of a rubber printing plate thereon by means of a strong pressure sensitive adhesive, said mounting surface being impervious to printing inks and printing ink solvents and resistant to peeling thereof when the printing plate is stripped therefrom repeatedly.

An object of the invention is to provide a backing member for mounting rubber printing plates which comprises, a relatively thin sheet of paperboard material formed of a mixture of latex and paper fiber which is characterized by a significantly higher degree of flexibility than that of previous backing sheet materials used for the aforesaid purpose, and a continuous plastic film secured upon a surface of said sheet of paperboard which is impervious to the inks, washes and solvents generally employed in connection with such rubber printing plates, said plastic film permitting adherence of the rubber printing plate thereon by means of a strong, pressure sensitive adhesive albeit, permitting the printing plate to be lifted or stripped from the plastic film repeatedly without peeling of the surface of the backing member.

Another important object of the invention is to provide a backing structure for rubber printing plates comprised of a thin, single-ply paperboard material having a grid or ruled surface formed thereon and a film of transparent plastic secured upon said surface, said paperboard material being formed of a mixture of latex and paper fibers blended together to realize a backing member having a substantially higher degree of flexibility than heretofore customary for such backing members, and said plastic film forming a very hard surface and being impervious and resistant to the inks and solvents customarily used in the printing process.

An object of the invention is to provide a mounting structure for rubber printing plates comprising, a relatively thin, flexible, latex impregnated paperboard member having a hard, plastic mounting surface resistant to printing ink and printing ink solvents, and said paperboard member having a grid provided thereon visible through said plastic surface.

A further object of the invention is to provide an indexing device for registration of impressions from rubber printing plates comprising, a rubber body having a type face for applying an index impression adapted to be adhesively secured upon a backing structure for rubber printing plates, said body being readily removable from the backing structure prior to a printing run.

Other objects achieved by the invention will become apparent from the ensuing description, among which are significant economies of manufacture of the backing structure, resistance of the backing structure embodying the invention to creasing and cracking, greater dimensional stability therefor and desirable strength and body for the backing structure entirely unexpected and unique considering the relative thin gauge thereof.

A preferred embodiment of the invention has been described in detail in the specification and illustrated in the accompanying drawings. Minor variations in structural details thereof may occur to the skilled artisan without departing from the spirit or sacrificing any of the advantages of the invention.

In the drawings:

FIG. 1 is a fragmentary perspective view of a wooden printing roller and having a backing structure mounting a rubber printing plate and an indexing device all embodying the invention secured on the circumference of said roller.

FIG. 2 is an enlarged fragmentary plan view of said roller showing the structure of FIG. 1 secured thereon.

FIG. 3 is a fragmentary sectional view taken along the line 3—3 of FIG. 1 or FIG. 2 and in the direction indicated generally, a portion of a sheet of corrugated paperboard being shown receiving imprints from the rubber printing plate.

FIG. 4 is a fragmentary sectional view taken through the structure of FIG. 1 and showing the various layers of materials greatly enlarged.

FIG. 5 is a perspective view of the indexing device installed on the backing structure embodying the invention.

Referring to the drawings, the reference character **20** represents a wooden printing roller or cylinder of a printing press customarily used for printing on corrugated paperboard **22** or the like. Ordinarily, the circumference of the roller **20** is scored or otherwise provided with a grid or ruled surface **24** which is utilized to position a printing plate properly on the circumference of the roller.

For purposes of describing the invention, certain terms will be used in connection with the various component parts discussed and illustrated with the following intended definitions. The term "printing plate assembly" is defined as the assemblage of components or parts as a unit which is secured on the printing roller **20** whereas the terms "rubber printing plate" or "printing plate" is defined as the rubber sheet member having the type face provided thereon. The terms "backing member" or "backing structure" will be used to define the sheet member on which the rubber printing plate or printing plate is adhesively secured. As seen in FIGS. 1 and 2, the printing plate assembly is represented generally by the reference character **26** and which is secured, as a unit, on the printing roller **20**. The reference character **28** identifies generally the rubber printing plate which is adhesively secured on the backing member or structure identified generally by the reference character **30**.

As seen in FIG. 4, the rubber printing plate **28** comprises a sheet **32** of rubber or rubber-like material the upper surface of which has been cut or otherwise provided with a printing face of type **34** designed to transfer a predetermined imprint of indicia to a surface of the corrugated paperboard **22**. The sheet **32** is affixed on a very thin sheet **36** of rubber by means of a coating of pressure sensitive adhesive **38**, the opposite or outer surface of the rubber sheet **36** also being coated with pressure sensitive adhesive **39** which may be similar to the adhesive **38**. The printing plate **28** is secured releasably on the backing member **30** by means of the coating of adhesive **39**. Any suitable pressure sensitive adhesive may be employed such as a latex cement or glue. The printing plate **28** may be obtained from a supplier already coated with adhesive **39** or may be coated by the printer preparatory to using the same.

Backing member **30** includes a specially constructed paperboard sheet **40** which is produced from a mixture of latex and paper fibers beaten in a Fourdrinier machine, for instance. The sheet **40** is thin and flexible to a degree heretofore not employed or considered feasible for backing sheet materials of this character. One surface **42** of the latex impregnated paperboard sheet **40** has a transparent or translucent plastic film **44** secured thereon which does not reduce the flexibility of the backing member **30** or materially increase the thickness thereof over the thickness of sheet **40**.

The plastic film **44** provides a very hard, non-porous mounting surface for the rubber printing plate. Said film **44** may consist of a thin sheet of polyethylene terephthalate, commonly known as "Mylar," laminated on the sheet **40** or may be formed by deposition of a vinyl plastic material over surface **42** in liquid form which subsequently is cured, to seal the surface **42**. Therefore, the term "film" will be used to connote a coating of plastic secured on surface **42** of sheet **40** to form a hard, impervious and non-porous mounting surface for the member **30**. The plastic film **44** preferably is transparent or translucent.

The backing member **30** also has a grid or ruled surface provided thereon which corresponds to the grid or ruled surface **24** on the printing roller **20**. The grid of the

backing member can be provided by suitable lines **46** printed or otherwise applied on the surface **42** of sheet **40** which will be covered by the plastic film **44**. Obliteration, erasure or wearing away of the grid is positively prevented by film **44**. The lines **46** forming the grid on the backing member will be visible through the normally transparent or translucent film **44**.

The backing member **30** is suitably flexible and thin to permit same to be wound on spools and supplied in rolls to the printer. Although the paperboard sheet **40** is sufficiently flexible to encourage such winding of the material **30** on reels, it will be apparent that any weakening of the sheet **40** which might result during winding will not result subsequently in penetration by printing inks and ink solvents of the sheet **40** by reason of the protective covering provided by film **44**.

As seen in FIG. 4, the printing plate **28** is removably secured on the film **44** by means of the pressure sensitive adhesive **39**. Although the printing plate **28** can be lifited or stripped from the backing member **30** repeatedly, no resulting peeling of the backing member will be encountered. Also, since the plastic film **44** prevents printing inks and printing ink solvents from being absorbed into the sheet material **40**, there will be no de-lamination of the backing member encountered such as separation of the paperboard material **40** and plastic film **44**. Further, the plastic film **44** is tough and the sheet member **40** is dimensionally stable and in this manner, the strength and dimensional stability of the entire backing member **30** is maintained over longer periods of time than heretofore considered probable. Creasing and cracking of the backing member **30** is entirely absent under normal conditions of use. As a result, when the printing plate **28** is adhesively affixed on the backing member **30**, there is no concern that an irregular printing face **34** will be presented to the corrugated material **22** during printing, as seen in FIG. 3.

It may further be noted from FIGS. 2 and 3 that the printing plate assembly **26** is secured on the roller **20** by mechanical fasteners such as staples **48** arranged around the perimeter of the backing member **28**. The assembly **26** must be properly positioned relative to the roller **20** so as to avoid high printing portions on the printing face **34**. The superior flexibility of the backing member **30** enables the assembly **26** to be installed on roller **20** in uniform engagement with the circumference of the roller as illustrated in FIG. 3.

Referring to FIG. 5, the indexing device embodying the invention is designated generally by the reference characted **50**. The device **50** is comprised of a thin sheet **52** of rubber or rubberized material similar to the sheet **36** seen in FIG. 2. Secured on the sheet **52** is a rubber body **54** having a type face **56** cut therein of suitable configuration for registration purposes, such as a character of indicia having the cruciform configuration illustrated. The underside of the sheet **52** is coated with a pressure sensitive adhesive, such as adhesive **39**, by means of which the device **50** can be secured removably on the backing member **30**.

As seen in FIG. 2, the indexing device **50** can be advantageously positioned on the backing member **30** during set-up of a printing press for locating the printing plate **28** properly on the backing member **30**. Once the press is set up for a printing run, if desired, the device **50** conveniently can be removed merely by stripping same from the backing member. However, the device **50** is constructed so that it will not interfere with the printing by printing plate **28** even if left on the backing member **30** because the height thereof above the backing member **30** is substantially the same as the height of the printing face **34** above said member **30**.

As a precaution against the deleterious effect of printing ink or printing ink solvent seeping between the printing plate **28** and the backing member **30**, after the printing plate **30** is adhesively secured on the plate **28**, strips **58** of adhesive tape can be used selectively to prevent such seepage. As seen in FIGS. 2 and 3, the strips of tape **58** can be sufficiently wide to cover both the edges of the rubber sheet **32** and the thin rubber sheet **36**.

It is believed that the invention has been described in sufficient detail to enable the skilled artisan to understand and practice the same. The invention has been pointed out distinctly in the appended claim in language intended to be liberally and broadly construed.

What it is desired to secure by Letters Patent of the United States is:

A printing plate assembly for printing directly upon corrugated paperboard and the like, comprising, a rubber printing plate, a unitary, flexible backing structure adapted to be installed on a printing cylinder and having said printing plate secured on the upper surface thereof, said printing plate being smaller in both length and width than said backing structure, said backing structure comprising, a flexible, single-ply sheet of latex impregnated paperboard having a very thin, plastic film permanently bonded thereto overlying a face of said paperboard sheet and coextensive therewith to provide said surface, said film being harder than said sheet and impervious to conventional printing inks and solvents, said assembly being removable from and replaceable on said cylinder without requiring separating of the printing plate from the backing structure, and adhesive tape strips secured overlying the entire edges of said printing plate and adjacent portions of said film for sealing said edges.

References Cited in the file of this patent

UNITED STATES PATENTS

1,531,554	Harley	Mar. 31, 1925
1,607,267	Lublintz et al.	Nov. 16, 1926
1,799,217	De Cew	Apr. 7, 1931
1,964,236	Welch	June 26, 1934
2,099,154	Waters	Nov. 16, 1937
2,294,879	Affelder	Sept. 8, 1942
2,907,274	Taylor	Oct. 6, 1959

OTHER REFERENCES

Heitt et al.: "Silk-Screen Process Production," 1950. (Pages 61 and 62 relied on.)