April 18, 1944. J. L. BREESE 2,346,816

SIDE WALL PILOT

Filed Aug. 8, 1941

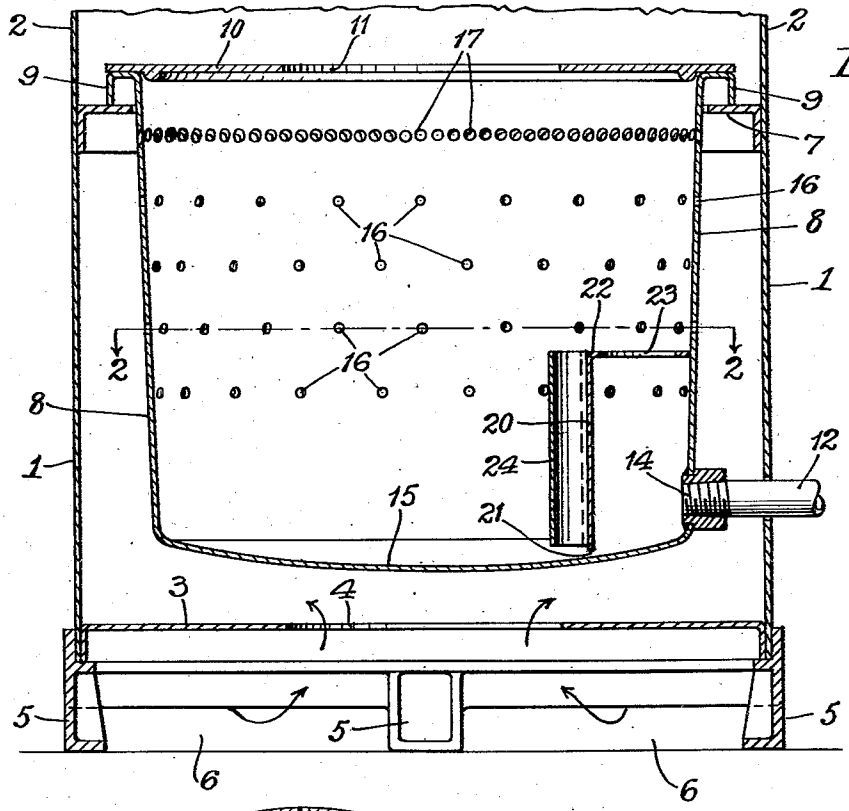

Fig. 1.

Fig. 2.

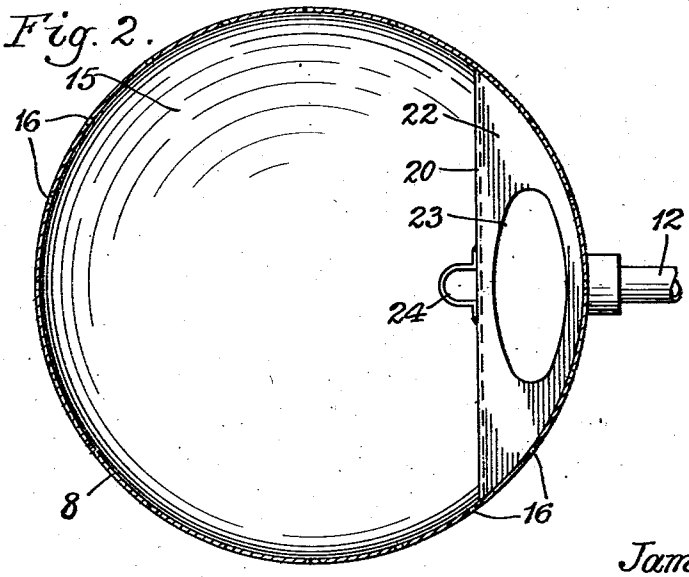

Inventor.
James L. Breese.
by Parker & Carter
Attorneys.

Patented Apr. 18, 1944 2,346,816

UNITED STATES PATENT OFFICE

2,346,816

SIDE WALL PILOT

James L. Breese, Santa Fe, N. Mex., assignor to Oil Devices, Santa Fe, N. Mex., a limited partnership of Illinois

Application August 8, 1941, Serial No. 405,920

5 Claims. (Cl. 158—91)

This invention relates to an improvement in pot type burners for liquid fuels, and has for one purpose the provision of an improved pilot means for providing a low turndown for pot type burners.

Another purpose is to provide an improved pilot means which shall be efficient in use and easily applied and removed.

Another purpose is to provide means for carrying flame to the bottom of the pot for ignition.

Other purposes will appear from time to time in the course of the specification and claims.

The invention is illustrated more or less diagrammatically in the accompanying drawing wherein:

Fig. 1 is a vertical axial section; and

Fig. 2 is a section on the line 2—2 of Fig. 1.

Like parts are indicated by like symbols throughout the specification and drawing.

Referring to the drawing, 1 indicates an outer housing, herein shown in the form of a drum having an upper extension, or continuation 2, which serves as a combustion chamber. 3 indicates a partition adjacent the bottom of the drum 1 and having a central air admitting aperture 4. 5 indicates any suitable supporting means or legs, with ample air gaps 6 between them, whereby air may be admitted through the aperture 4 to the space within the drum 1.

7 indicates a pot support herein shown as in the form of an angle ring secured to the inner face of the drum 1. 8 is a pot having an upper flange 9 resting upon the ring 7. 10 is any suitable flame ring for the top of the pot, having a central aperture 11.

12 is a fuel duct extending from any suitable source of liquid fuel supply not herein shown. Any suitable means not herein shown may be employed for varying the rate of flow of fuel along said duct and thereby varying the height of the fire within the pot. 14 is any suitable liquid fuel inlet nozzle, the details of which do not of themselves form part of the present invention.

The pot is provided with a generally concave bottom 15, upon which fuel may flow to be vaporized by the heat of combustion occurring above in the pot. The wall of the pot is provided with a plurality of air inlet apertures 16, located at various levels. Any suitable means may be employed for delivering a secondary air supply to the top of the pot. Illustrated for example is a plurality of secondary air inlets 17.

In the so-called hydroxylating type burners, liquid fuel flowing into the pot is vaporized by the heat of combustion taking place in or above the bottom. The vaporized hydrocarbon rises and becomes mixed with the primary air supplied by the primary air inlet apertures 16. This mixture then rises upwardly through the pot and receives a secondary air supply from the air inlets 17, and combustion takes place at or above the level of the secondary inlets, flame extending up into the combustion chamber at the high fire. It is important in this type of burner, however, to provide means for maintaining a low turndown or a pilot stage at which stage the amount of heat delivered is small. A pilot structure is provided, which shall be called a side wall pilot. This structure includes a wall 20, herein shown as generally vertical and flat and cutting off a portion of the interior of the pot adjacent the fuel inlet and including the fuel inlet. This wall 20 may terminate short of the bottom of the pot, as at 21, or may be provided with any other suitable means, apertures, notches, or the like, whereby fuel delivered from the nozzle 14 may flow downwardly and outwardly into the center of the bottom 15. The top of the space enclosed between the partition 20 and the adjacent pot wall is further cut off by a horizontal wall 22, extending from the upper edge of the partition 20 to the pot wall. It may be provided with any suitable aperture or apertures, but an oval aperture 23 is indicated. 24 indicates a lighting tube, which extends from or adjacent the top of the partition 20 to a point adjacent the bottom of the pot.

In the normal operation of the device, at high fire more fuel is admitted than can be burned in the pilot chamber. This excess fuel flows out upon the bottom 15 of the pot, and is vaporized by the heat of combustion taking place in the upper portion or above the pot. The level at which combustion takes place is controlled by varying the supply of fuel. When the supply or rate of fuel flow is cut to a minimum, then the volume of fuel delivered is entirely burned in the pilot area.

The pilot supply of oil is delivered from the nozzle 14 and may be dropped to the bottom of the pot, and is vaporized by combustion at or above the top of the pilot area defined by the partitions 20 and 22. Vaporized hydrocarbon mixes with the primary air supplied by the lowest row of primary apertures 16, part of which row is in communication with the space within the pilot piece formed by the partitions 20 and 22. The hydroxylated mixture thus provided flows upwardly to and through the aperture 23 and receives its secondary supply of air at or above the level of the apertures 23 from the air delivered to

the interior of the pot as a whole by the primary air inlets 16. That is to say, these air inlets outside of the pilot area are primary air inlets when the flame is at the high stage, but provide secondary air for the pilot flame. At the pilot stage all of the fuel supplied is vaporized within the pilot area and is burned at or above the top of the pilot structure.

If the rate of flow is increased, the excess oil then begins to flow out into the bottom 15 of the pot. In practice, as the rate of flow is increased, the level of combustion rises until finally at the high fire all of the inlet apertures 16 are effective as primary air inlet apertures, and the secondary air supply is received through the inlets 17.

When the oil spills out under the partition, a certain amount of the vaporized hydrocarbon rises through the tube 24, the end of which is adjacent the flame, which is located at the fuel orifice or aperture 23, and the tube then serves as a lighting or flame carrying tube, which directs the flame to light the vaporized hydrocarbon at the bottom of the burner adjacent the lower end of the tube.

It will be realized that, whereas a practical and operative device is described and illustrated, nevertheless many changes may be made in the size, shape, number and disposition of parts without departing from the spirit of the invention. It is therefore wished that the description and drawing be taken as in a broad sense illustrative or diagrammatic, rather than as a limitation to the precise showing.

What is claimed is:

1. In combination, in a pot type burner, a burner pot having a plurality of air inlet apertures located at various levels, means for supplying liquid fuel to the bottom of the pot including a liquid fuel inlet member, and a pilot member, including a partition adapted to cut off from the rest of the interior of the pot a space adjacent and surrounding the fuel inlet member, said partition including an apertured generally horizontal top portion, and said partition being spaced from the pot bottom to admit liquid fuel from the space within said pilot member to the bottom of the pot outside of said pilot member, and an open ended flame tube the top of which is adjacent the apertured top portion of the pilot member and the lower end of which is adjacent the pot bottom.

2. In combination, in a pot type burner, a burner pot having a plurality of air inlet apertures located at various levels, means for supplying liquid fuel to the bottom of the pot including a liquid fuel inlet member, and a pilot member, including a partition adapted to cut off from the rest of the interior of the pot a space adjacent and surrounding the fuel inlet member, said partition including an apertured generally horizontal top portion, and said partition being spaced from the pot bottom to admit liquid fuel from the space within said pilot member to the bottom of the pot outside of said pilot member, and an open ended flame tube the top of which is adjacent the apertured top portion of the pilot member and the lower end of which is adjacent the pot bottom, and in communication with the space in the pot exterior to said pilot member.

3. In combination, in a pot type burner, a burner pot having a plurality of air inlet apertures located at various levels, means for supplying liquid fuel to the bottom of the pot including a liquid fuel inlet member, and a pilot member, including a partition adapted to cut off from the rest of the interior of the pot a space adjacent and surrounding the fuel inlet member, said partition including an apertured generally horizontal top portion, and said partition being spaced from the pot bottom to admit liquid fuel from the space within said pilot member to the bottom of the pot outside of said pilot member, and an open ended flame tube the top of which is adjacent the apertured top portion of the pilot member and the lower end of which is adjacent the pot bottom, the tube being mounted on the partition.

4. In combination, in a pot type burner, a burner pot having a plurality of air inlet apertures located at various levels, means for supplying liquid fuel to the bottom of the pot including a liquid fuel inlet member, and a pilot member, including a partition adapted to cut off from the rest of the interior of the pot a space adjacent and surrounding the fuel inlet member, and said partition being spaced from the pot bottom to admit liquid fuel from the space within said pilot member to the bottom of the pot outside of said pilot member, and an open ended flame tube the top of which is adjacent the top portion of the pilot member and the lower end of which is adjacent the pot bottom.

5. In combination, in a pot type burner, a burner pot having a circumferential generally cylindrical side wall provided with a plurality of primary air inlet apertures located at various levels in the wall, said pot having a closed bottom and an open top and a centrally apertured flame ring partially closing the open top, a liquid fuel duct extending to said pot, and in communication with the interior of the pot adjacent the bottom thereof, and a pilot member located within the interior of said burner pot and including a generally vertical wall portion adapted to separate from the rest of the interior of the pot a limited space of the pot adjacent and surrounding the point of entry of liquid fuel from the liquid fuel duct and a generally horizontal top wall portion having an aperture therein, said horizontal top wall portion extending from the top of the vertical portion to the adjacent portion of the pot side wall, at a level above the level of the lowest of the primary air inlet apertures, said vertical wall portion having its lower edge spaced from the bottom of the pot, and an open ended flame tube the top of which is adjacent the apertured top wall portion of the pilot member and the lower end of which is adjacent the pot bottom.

JAMES L. BREESE.