March 20, 1945. F. P. TUCKER 2,371,921

BATTEN

Filed Sept. 22, 1943

Fig. 1.

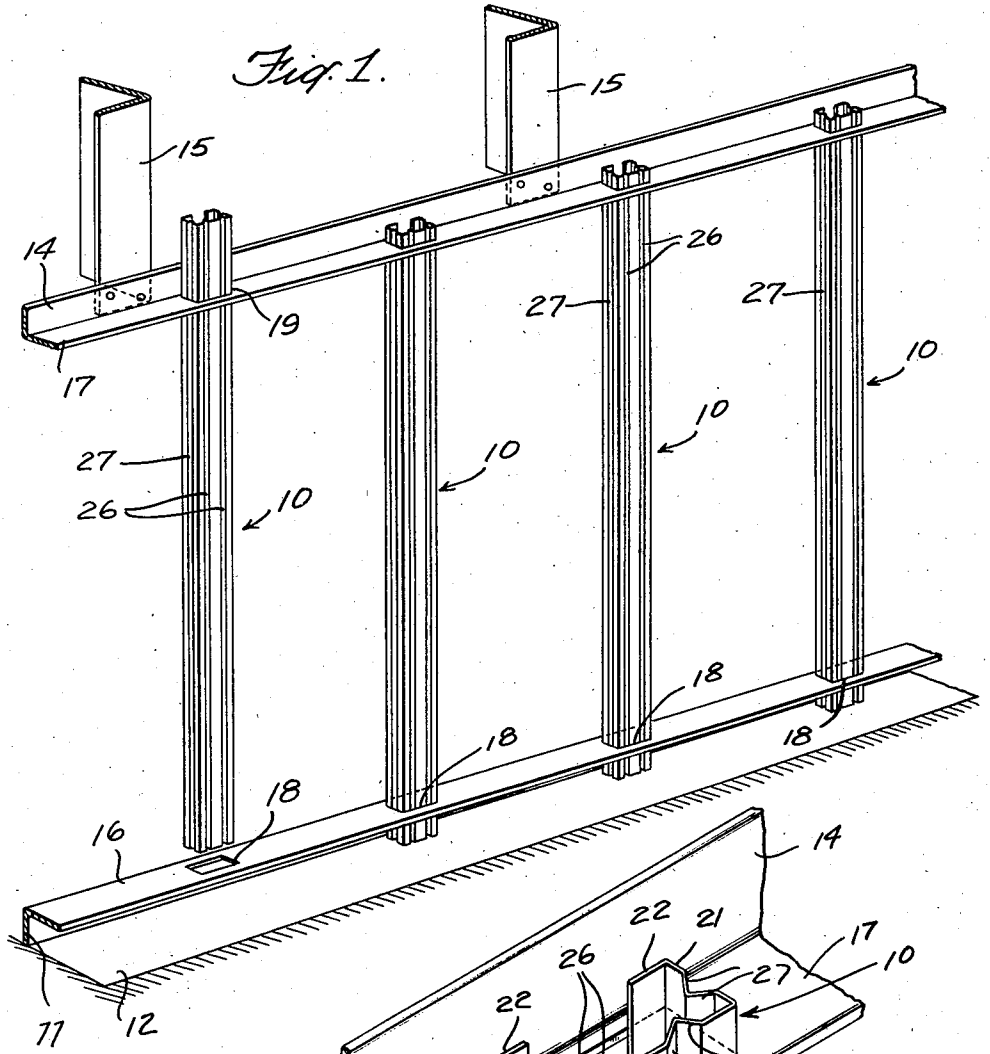

Fig. 2.

INVENTOR.
FRANK PHILIP TUCKER

BY Victor D. Borrel

ATTORNEY

Patented Mar. 20, 1945 2,371,921

UNITED STATES PATENT OFFICE

2,371,921

BATTEN

Frank Philip Tucker, Little Silver, N. J.

Application September 22, 1943, Serial No. 503,452

2 Claims. (Cl. 189—34)

This invention relates to movable partitions and more particularly to partitions for dividing the cargo space of vessels so as to prevent shifting of the cargo. Such partitions usually take the form of spaced vertical battens which are held in deck and ceiling supports and are arranged so that they may be variably positioned as required in each particular instance.

An object of the present invention is to provide a removable batten of the type above indicated having novel and improved details of construction.

Another object is to provide a batten for the purpose above indicated which combines lightness of weight with extreme rigidity.

Various other objects and advantages will be apparent as the nature of the invention is more fully disclosed.

In accordance with the present invention, the batten is made from sheet metal bent in the form of a three sided channel having inturned side flanges forming corner angles at the free edges. Each of the three sides is formed with re-entrant grooves or ribs for strengthening purposes. The open side between the free edges provides resilience to permit the batten to be readily positioned or removed, and the corner angles together with the vertical re-entrant grooves provide strength and rigidity.

Although the novel features which are believed to be characteristic of this invention are pointed out more particularly in the claims appended hereto, the invention itself may be better understood by referring to the following description, taken in connection with the accompanying drawing in which a specific embodiment thereof has been set forth for purposes of illustration.

In the drawing,

Fig. 1 is a perspective view of a partition embodying the present invention; and

Fig. 2 is an enlarged detail view showing the construction of the batten.

Various details are identified herein by specific terms for convenience. It is to be understood, however, that these terms are to be given an interpretation commensurate with the state of the art.

Referring to the drawing more in detail, the invention is shown as applied to vertical battens 10 of substantially rectangular section, which are secured in a lower supporting member 11 attached to the deck 12 of the cargo space and to an upper supporting member 14 which is attached by brackets 15 to the ceiling of said space. The members 11 and 14 are provided with horizontal flanges 16 and 17 respectively, having rectangular openings 18 and 19 aligned to receive the battens 10.

The upper supporting member 14 is spaced below the ceiling a sufficient distance to provide clearance for the batten 10 to be first inserted in the opening 19 of the upper supporting member 14 and then to be pushed upwardly a sufficient distance so that the bottom of the batten clears the lower supporting member 11 as illustrated by the batten at the left in Fig. 1. The batten may then be lowered through the opening 18 in the lower supporting member 11 and is thus secured as illustrated by the three battens at the right in Fig. 1.

More specifically, the batten 10 is formed from a sheet metal which is bent to form a channel having a closed side 20, ends 21, and corner flanges 22 forming a part of a fourth open side. The metal of the closed side 20 is bent inwardly to form V-shaped flanges 26 extending longitudinally of the batten and the two ends 21 are similarly bent inwardly to form V-shaped flanges 27. The V-shaped flanges 26 and 27 increase the transverse stiffness of each of the sides of the batten in both directions. The flanges 22, forming angles at the free edges, likewise increase the transverse rigidity, whereas the open side provides the necessary resilience to permit the batten to be inserted in the openings 18 as above described and to be securely held therein by friction.

It is to be noted that the portions of the side wall 20 and the end walls 21 between the flanges 26 and 27 constitute angle corner sections. Hence the batten is provided with four angle corners and with strengthening flanges on three sides. By means of this construction a batten having extreme rigidity in four directions is obtained while retaining the lightness in weight which is important for the purpose for which the batten is to be used.

Although a specific construction has been shown for purposes of illustration, it is to be understood that the invention is capable of various adaptations as will be readily apparent to a person skilled in the art. The invention is only to be restricted in accordance with the scope of the following claims.

What is claimed is:

1. A partition batten comprising a sheet metal member bent in the form of a channel having a side and two end sections, inturned edge flanges formed on each end section forming angle corners at the free edges, a longitudinal V-shaped

flange formed in each end section and a pair of spaced, longitudinal, V-shaped flanges formed in said side, the portions of the side and ends between said V-shaped flanges forming angle corners, whereby each corner comprises an angle section and each side includes strengthening ribs, the free edges of said inturned edge flanges being spaced apart to form an open side and to provide resilience to permit the batten to be inserted in a support.

2. A partition comprising upper and lower supporting members, each supporting member having a horizontal flange provided with aligned rectangular openings therein, battens secured in said aligned openings, each of said battens comprising a sheet metal member bent in the form of a channel having a side and two end sections, inturned edge flanges formed on each end section forming angle corners at the free edges, a longitudinal V-shaped flange formed in each end section and a pair of spaced, longitudinal, V-shaped flanges formed in said side, the portions of the side and ends between said V-shaped flanges forming angle corners, whereby each corner comprises an angle section and each side includes strengthening ribs, the free edges of said inturned edge flanges being spaced apart to form an open side and to provide resilience to permit the batten to be inserted in a support.

FRANK PHILIP TUCKER.