July 15, 1930. C. E. WOLFSTYN 1,770,763

CLAMP

Filed Feb. 3, 1928

Fig. 1.

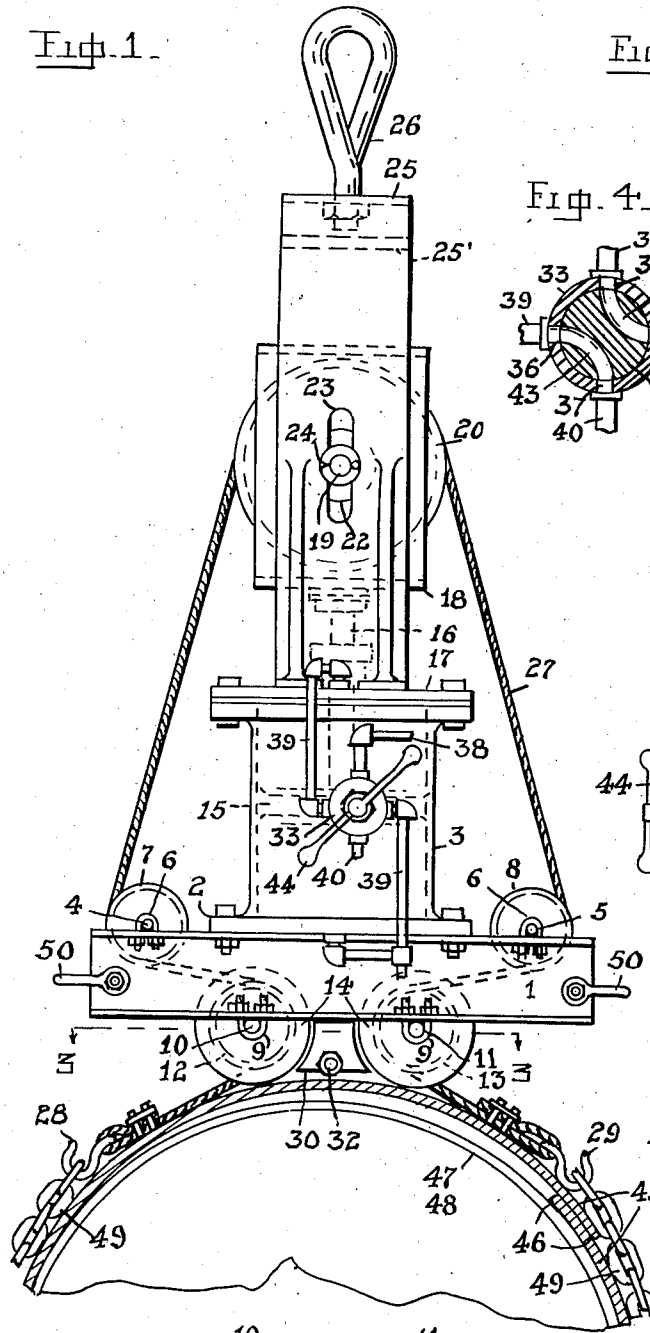

Fig. 4.

Fig. 2.

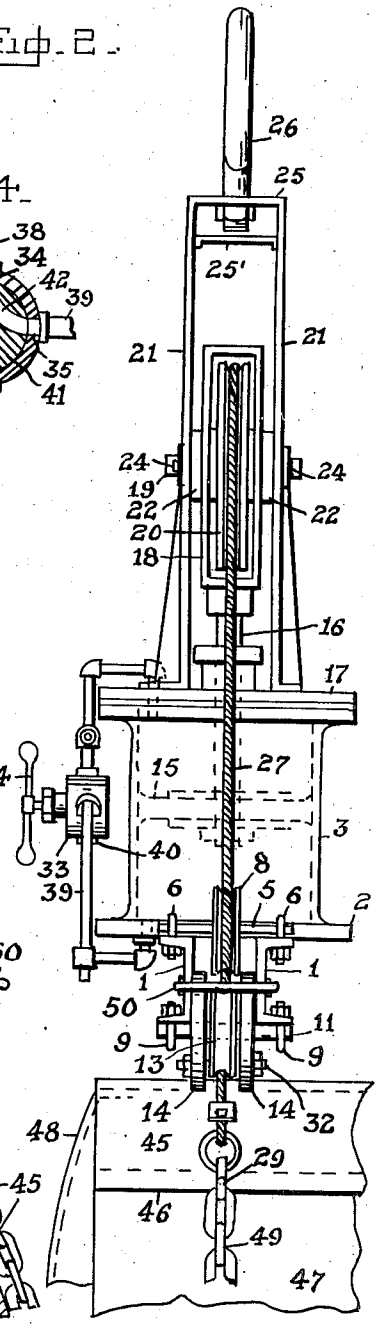

Fig. 3.

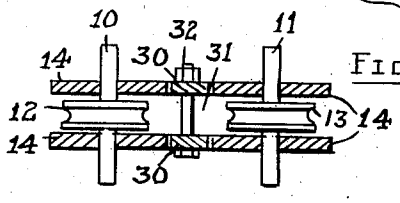

INVENTOR

C. E. Wolfstyn,

by F. N. Barber,

Attorney.

Patented July 15, 1930

1,770,763

UNITED STATES PATENT OFFICE

CARL E. WOLFSTYN, OF CRAFTON, PENNSYLVANIA, ASSIGNOR TO PITTSBURGH-DES MOINES COMPANY, OF PITTSBURGH, PENNSYLVANIA, A CORPORATION OF PENNSYLVANIA

CLAMP

Application filed February 3, 1928. Serial No. 251,727.

My invention relates to clamps for squeezing or compressing hollow sheet or plate metal bodies having cylindrical, elliptical, angular or similarly shaped cross-sections with an open side, and operating so as to bring the longitudinal edges along the open side into such abutting or overlapping relation, or the ends of such bodies into definite abutting or overlapping relations with heads or flat ends seated in or against the said ends, or both, as may be required for welding or otherwise firmly securing together the said edges, or the said ends to the said flat ends, heads, or both.

It is the object of this invention to accomplish not only the results just enumerated, but also, if required, to provide such a clamp with means which, while the clamp is in operation, produces a constant hugging, squeezing or compressing action on the metal forms or bodies. This constant action is particularly valuable when the open cylindrical or like forms or bodies are to have their ends drawn around peripheries of flat heads or around the flanges of cupped or dished heads which are to be welded or otherwise secured to the forms or bodies. The friction of the cylindrical or like forms against the peripheries of the said heads or flanges is so great that the forms can not usually be squeezed so as to bring the heads and the bodies or the longitudinal edges of the bodies to their desired final position without hammering the outside of the forms at the portions opposite the said heads or flanges. During this hammering the friction between the heads or flanges and the forms is somewhat eased so that the constant hug or squeeze of the clamp instantly produces between the head and the form slippage which is instantly taken up by the clamp.

Referring to the accompanying drawing, Fig. 1 is an end view of one form of my invention applied to a cylindrical body shown in cross-section with about two-thirds broken away. Fig. 2 is an elevation of my invention, the view being that seen when looking at Fig. 1 from the right. Fig. 3 is a section on the line 3—3 on Fig. 1. Fig. 4 is a section through the steam-controlling valve for the steam motor.

On the drawings, I show a pair of channel-beams 1 spaced apart and having their upper edges bolted to the lower head 2 of the steam cylinder 3. On the upper edges of the beams 1 and at opposite sides of the head 2 are the two stationary axles 4 and 5 whose ends are clamped to the flanges of the beams by the U-bolts 6. Sheaves 7 and 8 are loosely mounted on these axles and between their ends and have their lower portions between the beams 1.

U-bolts 9 clamp the two axles 10 and 11 to the lower flanges of the beams. Sheaves 12 and 13 are loosely mounted on the axles 10 and 11 respectively, there being at each side of each of these sheaves a roller 14 having a larger diameter than that of the said sheaves. The rollers and sheaves have their upper portions between the beams 1, and are positioned near the center of the clamp and below the cylinder 3.

The cylinder 3 contains the piston 15 having the piston-rod 16 which extends up through the upper cylinder head 17 and has its upper end secured to the lower member of the rectangular metal frame 18. The axle 19 is mounted in the side members of the frame 18 and supports the sheave 20 positioned between the said side members. The top of the head 17 has attached thereto, as by welding, the two vertical guide members 21 arranged at opposite sides of the frame 18 and spaced therefrom by the washers 22. The guide members have vertical slots 23 through which the ends of the axle 19 project, cotter pins 24 being passed through the axle and at the outer faces of the guide members 21 to hold the axle in place. The upper ends of the guide members are connected to the cross-piece 25 to which the swivel-eye 26 is secured. 25′ is a spacer between the members 21.

A flexible device, as the cable 27, has its middle portion on the sheave 20, one branch going down on the outer edge of the sheave 7 and thence on the inner part of the sheave 12 and thence below the rollers 14 and terminating in the hook 28. The other

branch of the cable goes down on the outer edge of the sheave 8 and thence on the inner portion of the sheave 13 and thence below the rollers 14 and terminating in the hook 29.

I weld to the lower edges of the beams 1 and between the rollers 14 the metal plates 30 so as to provide an enclosed space 31, bounded at its ends by the opposing rims of the sheaves 12 and 13 and at its sides by the said plates 30 and the adjacent portions of the rollers 14, so that the cable can not escape laterally between opposing rollers 14. I pass a bar or bolt 32 through the plates and the said space so as to keep the ends of the cable at their respective sides of the said space and prevent the ends from becoming twisted together. This bar keeps the cable-ends in their places so that the cable end or hook hanging nearest to one of the sheaves is the one that runs on that sheave.

33 is a valve casing having the four ports 34 to 37. The steam inlet pipe 38 in connected to the port 34; the steam pipe 39 is connected to the port 35 and carries steam through the head 2 and into the cylinder 3 below the piston 15; the steam pipe 39 is connected to the port 36 and carries steam through the head 17 and into the cylinder above the piston 15; and the pipe 40 is connected to the port 37 and is the steam exhaust pipe. Within the casing 33 is the rotary four-way valve member 41 having the passages 42 and 43, the passage 42 in one position connecting the ports 34 and 35, and in its alternate position the ports 34 and 36, while the passage 43 in one position connects the ports 36 and 37 and in its alternate position connects the ports 35 and 37. 44 is a handle for turning the valve member 41.

45 represents a cylindrical sheet metal body having the overlapping longitudinal edges 46, one end of the body containing the circular flange 47 of the head 48. A flexible member, as the chain 49, embraces the body 45 and has its ends connected to the hooks 28 and 29.

50 are metal handles attached to the beams 1 and are to be grasped by the operator of the machine to assist him in adjusting the position thereof.

The operation is as follows:

The mechine shown together with the chain 49 surrounding the body 45 and connected to the hooks 28 and 29 is suspended from a crane or other support connected to the swivel-eye 26, the head 48 having its flange 47 in one end of the body, as shown. The body 45 engages the lower edges of the rollers 14 which form an anti-friction rest for the body 45 when it is pulled toward the sheaves 12 and 13 by the flexible device 27—49. The rollers 14 being larger than the sheaves 12 and 13 prevent the contact of the latter with the body 45. The plates 30 are also spaced from the body 45. The valve member 41 is turned from its off position, wherein the ends of the passages 42 and 43 are all between consecutive ports, to that shown in Fig. 4. Steam flows from any suitable source through the pipe 38, the passage 42, and the pipe 39 into the lower end of the cylinder 3, and causes the piston 15 to rise and carry the middle part of the cable upwardly. This produces a strain on the chain 49 which squeezes the body 45 tending to decrease the circumference of the body 45. Owing to the friction, particularly of the inner face of the body with the periphery of the flange 47 of the head 48, the steam motor described will not ordinarily be able to squeeze the body to the desired fit with the said flange. Workmen beat the body particularly opposite to the flange 47 in order to ease the friction and to cause a slippage between the body and the flange due to the constant squeezing or hugging action of the flexible device on the body, the steam pressure being constantly maintained in contact with the lower face of the piston. The steam pressure constantly tending to lift the piston acts flexibly like a spring under tension to cause slippage between the friction surfaces as soon as the friction is eased by the hammers or otherwise. The body being in contact only with the sheaves 12 and 13 and the flexible loop, and not in contact with any fixed member, readily adjusts itself in the manner just described.

It is not necessary that my device shall be suspended as it may in some situation be made stationary. It may be supended at any angle from that shown by attaching its supporting means to the eye 26 and one of the handles 50 or to other parts of the device. My invention may be used with bodies having various cross-sections, as circular, angular or ellipitical, for example.

When it is desired to release the body from the flexible device, the valve member 41 is moved so as to make the passage 42 connect the ports 34 and 36, and the passage 43 the ports 35 and 37, whereupon steam enters the upper end of the cylinder and lowers the sheave 20 and provides slack in the flexible device 27—49. The valve member may then be moved to the said off position, if desired.

I do not limit my invention to the use of steam motors, as other fluid-operated motors or electric motors or other means furnishing a constant pull on the flexible device may be used.

The two flexible devices 27 and 49 act as a single device which may be used if desired.

Although the drawing shows only one end of the cylinder 45 it is to be understood that my invention can be used to shrink the cylinder around a head at each end thereof, and that, if need be, more than one of my machines may be distributed along the cylinder.

My invention may be applied to the bundling or baling of rods or other objects, which may by my invention be squeezed into suitable shape and held during the application of suitable hoops, ties or the like for holding the objects in shape assumed under the action of the invention.

I claim—

1. In a machine for reducing the circumference of an open-sided hollow metal body, an endless flexible device adapted to be looped around the body, means engaged by the flexible device and tending constantly to contract the loop to take up any slack as soon as resistance to the contraction of the said body becomes eased and means carried by the first means for allowing the travel of the flexible device lengthwise and of the first means on the body, one relative to the other.

2. In a machine for reducing the circumference of an open-sided hollow metal body, an endless flexible device looped around the body and a motor and means constantly actuated by the motor and engaging the loop to contract the same to take up any slack as soon as resistance to the contraction of the said body becomes eased, the flexible device being throughout free to move lengthwise.

3. In a machine for reducing the circumference of an open-sided hollow metal body, an endless flexible device looped around the body, a fluid-operated motor, a piston therefor, and means connecting the latter to the flexible device to contract the loop to take up any slack as soon as resistance to the contraction of the said body becomes eased, the flexible device being throughout free to move lengthwise.

4. In a machine for reducing the circumference of an open-sided hollow metal body, a fluid-pressure cylinder, a piston therein, a sheave supported by the piston, a base attached to the lower head of the cylinder, a pair of opposing sheaves carried by the base and arranged near each other, and an endless flexible device having free travel on the said sheave and guided by the said pair of sheaves between which the flexible device lies, the latter below the said pair of sheaves being formed into a loop surrounding an open-sided hollow metal body.

5. In a machine for reducing the circumference of an open-sided hollow metal body, a fluid-pressure cylinder, a piston therein, a base attached to the lower head of the cylinder, a pair of opposing sheaves carried by the base and arranged near each other, and an endless flexible device controlled by the piston and guided by the said pair of sheaves between which the flexible device lies, the latter below the said pair of sheaves being formed into a loop surrounding an open-sided hollow metal body, the flexible device being throughout free to creep lengthwise.

6. In a machine for reducing the circumference of an open-sided hollow metal body, a fluid-pressure cylinder, a piston therein, a pair of bars secured to the bottom of the cylinder, a pair of opposing sheaves carried by the bars below the cylinder and arranged near each other, a pair of sheaves carried by the bars, one sheave being at each side of the cylinder, an endless flexible device, a piston-rod operated by the piston, and a sheave carried by the piston-rod, the flexible device being looped over the said sheave and thence extending downwardly at each side thereof and on the outer edges of the second pair of sheaves and thence on the opposing edges of the first pair of sheaves and thence continuing to form a loop.

7. In a machine for reducing the circumference of an open-sided hollow metal body, a fluid-pressure cylinder, a piston therein, a pair of bars secured to the bottom of the cylinder, a pair of opposing sheaves carried by the bars below the cylinder and arranged near each other, a pair of sheaves carried by the bars, one sheave being at each side of the cylinder, an endless flexible device, a piston-rod operated by the piston, and a sheave carried by the piston-rod, the flexible device being looped over the said sheave and thence extending downwardly at each side of the cylinder and on the outer edges of the second pair of sheaves and thence on the opposing edges of the first pair of sheaves and thence continuing to form a loop in combination with a roller positioned at each side of each member of the first pair of sheaves and having a larger diameter than that of the last named sheaves, and a plate between the edges of opposing rollers to prevent the lateral escape of the flexible device.

8. In a machine for reducing the circumference of an open-sided hollow metal body, a fluid-pressure cylinder, a piston therein, a pair of bars secured to the bottom of the cylinder, a pair of opposing sheaves carried by the bars below the cylinder and arranged near each other, a pair of sheaves carried by the bars, one sheave being at each side of the cylinder, an endless flexible device, a piston-rod operated by the piston, and a sheave carried by the piston-rod, the flexible device being looped over the said sheave and thence extending downwardly at each side of the cylinder and on the outer edges of the second pair of sheaves and thence on the opposing edges of the first pair of sheaves and thence continuing to form a loop in combination with a roller positioned at each side of each member of the first pair of sheaves and having a larger diameter than that of the last named sheaves, a plate between the edges of opposing rollers to prevent the lateral escape of the flexible device, and means between the plates to keep the opposing legs of the flexible device apart.

9. In combination, a cylinder, a piston

therein, a piston-rod carried thereby, a frame carried by the piston-rod, a sheave mounted on the frame, a pair of guides carried by the cylinders and arranged at opposite sides of the frame and guiding the latter, the guides having slots arranged parallel with the piston-rod, to receive and guide the axle on which the sheave is mounted, a base attached to the cylinder, sheaves carried by the base, and a flexible device arranged to run on the said sheaves and formed into a loop below the said base.

10. In a machine for reducing the circumference of a body, a pair of sheaves, an endless flexible device adapted to have one portion looped around the body and its intermediate portion lying between the sheaves and guided thereby, antifriction means on which another portion of the endless flexible device has free travel and means tending constantly to contract the loop to take up any slack as soon as resistance to the contraction of the said body becomes eased.

11. In a machine for reducing the circumference of a body, a pair of sheaves, an endless flexible device adapted to have one portion looped around the body and its intermediate portion lying between the sheaves and guided thereby, and a motor operating on another portion of the endless flexible device and tending constantly to contract the loop to take up any slack as soon as resistance to the contraction of the said body becomes eased, the flexible device being throughout free to creep lengthwise.

12. In a machine for reducing the circumference of a body, a pair of sheaves, an endless flexible device adapted to have one portion looped around the body and its intermediate portion lying between the sheaves and guided thereby, and a fluid operated motor, a piston therefor operating on another portion of the endless flexible device and tending constantly to contract the loop to take up any slack as soon as resistance to the contraction of the said body becomes eased, the flexible device being throughout free to creep lengthwise.

13. In a machine for reducing the circumference of a body, a pair of sheaves, an endless flexible device adapted to have one portion looped around the body and its intermediate portion lying between the sheaves and guided thereby, and means operating on another portion of the endless flexible device and tending constantly to contract the loop to take up any slack, as soon as resistance to the contraction of the said body becomes eased, in combination with antifriction means to space the sheaves from the said body.

14. In a machine for reducing the circumference of an open-sided hollow metal body, a fluid-pressure cylinder, a piston therein, a pair of bars secured to the bottom of the cylinder, a pair of opposing sheaves carried by the bars below the cylinder and arranged near each other, a pair of sheaves carried by the bars, one sheave being at each side of the cylinder, an endless flexible device, a piston-rod operated by the piston, and a sheave carried by the piston-rod, the flexible device being looped over the said sheave and thence extending downwardly at each side of the cylinder and on the outer edges of the second pair of sheaves and thence on the opposing edges of the first pair of sheaves and thence continuing to form a loop in combination with a roller positioned at each side of each member of the first pair of sheaves and having a larger diameter than that of the last named sheaves.

15. In a machine for reducing the circumference of an open-sided hollow metal body, a fluid-pressure cylinder, a piston therein, a pair of bars secured to the bottom of the cylinder, a pair of opposing sheaves carried by the bars below the cylinder and arranged near each other, a pair of sheaves carried by the bars, one sheave being at each side of the cylinder, an endless flexible device, a piston-rod operated by the piston, and a sheave carried by the piston-rod, the flexible device being looped over the said sheave and thence extending downwardly at each side of the cylinder and on the outer edges of the second pair of sheaves and thence on the opposing edges of the first pair of sheaves and thence continuing to form a loop in combination with a roller positioned at each side of each member of the first pair of sheaves and having a larger diameter than that of the last named sheaves, and a plate between the edges of opposing rollers to prevent the lateral escape of the flexible device.

16. In a machine for reducing the circumference of a body, a pair of sheaves, a flexible device adapted to form a loop around the body and lying between and guided by the sheaves, means contracting the loop, and antifriction means for spacing the sheaves from the body.

17. In a machine for reducing the circumference of an open-sided hollow metal body, an endless flexible device adapted to be looped around the body, means engaged by the flexible device and tending constantly to contract the loop to take up any slack as soon as resistance to the contraction of the said body becomes eased, and antifriction means on the first means to provide free relative movement of the flexible device and the first means, one with respect to the other.

18. In a machine for reducing the circumference of a body, a pair of sheaves, an endless flexible device adapted to have one portion looped around the body and its intermediate portion lying between the sheaves and guided thereby, antifriction means on which another portion of endless flexible device has free travel and means tending constantly to

contract the loop to take up any slack as soon as resistance to the contraction of the said body becomes eased, and antifriction means carried by the first means and adapted to space the first means from the body.

In testimony whereof I hereunto affix my signature.

CARL E. WOLFSTYN.