Dec. 7, 1948. M. R. HANNA 2,455,864

METHOD OF MANUFACTURE OF PLURAL CIRCUIT CONNECTING MEMBERS

Filed Dec. 4, 1945

Fig. 1.

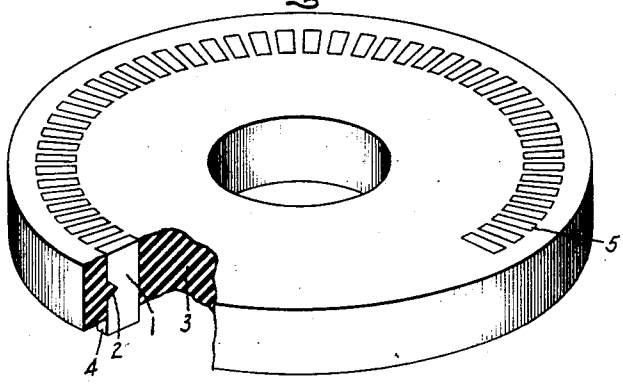

Fig. 2.

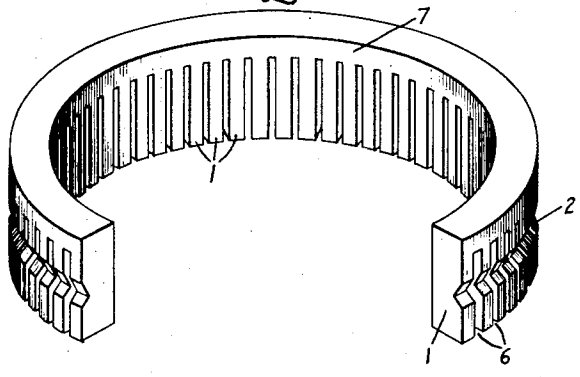

Fig. 3.

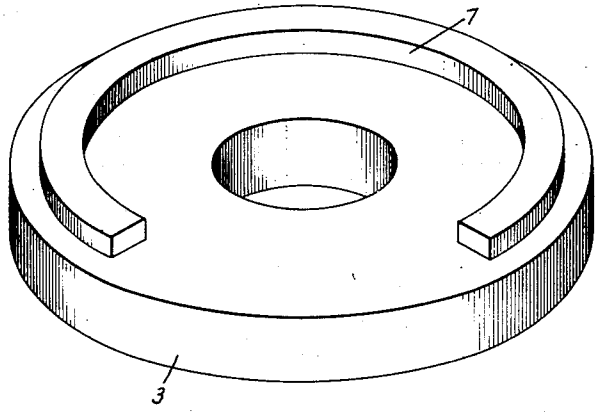

Inventor:
Max R. Hanna,
by Parrell & Mack
His Attorney.

Patented Dec. 7, 1948 2,455,864

UNITED STATES PATENT OFFICE

2,455,864

METHOD OF MANUFACTURE OF PLURAL CIRCUIT CONNECTING MEMBERS

Max R. Hanna, Erie, Pa., assignor to General Electric Company, a corporation of New York

Application December 4, 1945, Serial No. 632,733

2 Claims. (Cl. 29—155.54)

1

My invention relates to a method of manufacture of plural circuit connecting members such as may be used for rotary switches or commutators.

An object of my invention is to provide an improved method of manufacture of a commutator.

A further object of my invention is to provide an improved method of making a plural circuit connecting member.

Further objects and advantages of my invention will become apparent and my invention will be better understood from the following description referring to the accompanying drawing, and the features of novelty which characterize my invention will be pointed out with particularity in the claims annexed to and forming part of this specification.

In the drawing, Fig. 1 is a perspective view, partly broken away, showing an embodiment of the improved plural circuit connecting member; Fig. 2 is a perspective view of a cylindrical member used in the process of making the improved circuit connecting member shown in Fig. 1; and Fig. 3 is a perspective view of the cylindrical member shown in Fig. 2 with the insulating material molded thereabout prior to the removal of the solid connecting ring portion of the conductive member.

Referring to the drawing, I have shown an embodiment of the improved plural circuit connecting member comprising a plurality of longitudinally extending electrically conductive members 1, with a groove 2 formed in a peripheral edge thereof, which are supported and secured in circumferentially spaced apart relation by an insulating member 3 which is molded around the conductive members 1 and extends around all four sides thereof and into the groove 2 for securing these members in position with an end 4 thereof projecting longitudinally beyond the insulating member to provide circuit connecting portions with the opposite ends 5 exposed for contact with a contact brush member. This construction is preferably made by my improved method which includes forming a blank of the desired configuration which, as indicated in Fig. 2, is a hollow cylindrical member of electrically conductive material, and then forming a circumferentially extending groove 2 in a peripheral surface thereof and slotting the blanks as shown at 6, forming a plurality of bars 1 connected to a solid unslotted ring portion 7. The insulating material, which may comprise any suitable hardenable moldable insulating substance, is then molded around the bars 1 to a point longitudinally

2

beyond the circumferentially extending groove 2, so as to anchor the bars 1 securely in the insulating material. Then the unslotted solid ring portion 7 is removed in any suitable manner, as by turning or grinding, leaving exposed end surfaces 5 of the bars for contact by a suitable contact brush member and leaving a plurality of separate circumferentially spaced apart conductor bars 1, as shown in Fig. 1, with circuit connecting portions 4 extending longitudinally from the ends of the conductors 1 opposite the contact ends 5, so that these ends 4 of the bars 1 may be connected to the desired circuit which may comprise any control circuit or the leads of an armature winding.

While I have illustrated and described a particular embodiment of my invention and a particular method of making this improved construction, modifications thereof will occur to those skilled in the art. I desire it to be understood, therefore, that my invention is not to be limited to the particular arrangement and method disclosed, and I intend in the appended claims to cover all modifications which do not depart from the spirit and scope of my invention.

What I claim as new and desire to secure by Letters Patent of the United States is:

1. The method of making a plural circuit connecting member comprising forming a groove in a peripheral surface of a hollow cylindrical member of electrically conductive material, longitudinally slotting said member for a distance less than the longitudinal width thereof to form a plurality of bars connected to a solid ring portion, molding insulating material around said bars substantially from said solid ring portion longitudinally to a point beyond said groove but less than the outer extremity of said bars away from said solid portion so that an end portion on said bars beyond said insulating material is left exposed for providing lead connecting portions, and removing said solid ring portion as by grinding, whereby newly formed end surfaces of separate spaced conductor bars are exposed and adapted to make contact with a suitable brush contact member at the face of said plural circuit connecting member opposite said end portions providing lead connecting portions.

2. The method of making a commutator which comprises the steps of forming a cylindrical ring member of electrically conductive material, cutting a circumferentially extending groove in a peripheral surface of said ring member, slotting said ring member perpendicular to said groove and to a predetermined depth thereby forming

a plurality of individual bars connected at one end thereof to an unslotted portion of said ring member, molding insulating compound around said bars substantially from said unslotted portion longitudinally to a point beyond said groove, and removing by machining said unslotted portion of said ring member, thereby providing a plurality of insulated conductor bars circumferentially held in spaced relationship by said compound and having newly machined radially extending surfaces exposed for contact with a collector member.

MAX R. HANNA.

REFERENCES CITED

The following references are of record in the file of this patent:

UNITED STATES PATENTS

Number	Name	Date
1,633,922	Carter	June 28, 1927
1,826,443	Aufiero et al.	Oct. 6, 1931
2,104,141	Stevens	Jan. 4, 1938
2,188,423	Andrews	Jan. 30, 1940
2,316,651	Moeller	Apr. 13, 1943
2,388,006	Moeller	Oct. 30, 1945