PATENT SPECIFICATION

(11) S85620

(21) Application No. S2009/0086

(22) Date of Filing of Application: 28/01/2009

(45) Specification Published: 27 October 2010

(51) Int. Cl. (2009)
E05B 65/00
E05B 3/00
E05B 15/00

---

(54) Title: A security cap and a locking device for a cap

(72) Inventor: MICHAEL HANLY

(73) Patent Granted to: MICHAEL HANLY, an Irish citizen, Courtmacsherry Co. Cork, Ireland

© Copyright 2010, Government of Ireland

"A security cap and a locking device for a cap"

The present invention relates to a security cap, and in particular, though not limited to a security cap for closing a filling opening of a tank, for example, an oil tank or the like, and the invention also relates to a locking device for a cap.

According to the invention there is provided a security cap for a tank of the type having a neck extending from the tank and defining an open mouth to the tank, the security cap comprising a closure element for closing the open mouth and a pair of mounting means extending from the closure element for engaging an elongated retaining member extending transversely through the neck for retaining the cap captive with the neck with the closure element closing the open mouth, the retaining member being adapted for facilitating locking thereof in engagement with the mounting means and the neck.

In another embodiment of the invention the closure element of the security cap comprises a disc, and preferably, a flange extends around the disc adjacent the periphery thereof, and respective spaced apart portions of the flange form the respective mounting means. Preferably, the respective portions of the flange which form the mounting means are equi-spaced apart around the flange.

In one embodiment of the invention the flange extends substantially perpendicularly from the closure element.

In another embodiment of the invention a pair of flange bores are provided in the

respective portions of the flange which form the mounting means for engaging the retaining member.

Preferably, the retaining member comprises an elongated pin for engaging the respective flange bores. Ideally, the elongated pin is adapted for engaging corresponding neck bores in the neck, which preferably, are equi-spaced apart around the neck.

In another embodiment of the invention the retaining member extends from a head, which preferably extends transversely of the retaining member, and ideally, the head of the retaining member is adapted for abutting the flange of the disc adjacent the portion thereof forming one of the mounting means.

In another embodiment of the invention at least one transverse bore extends substantially transversely through the retaining member spaced apart from the head of the retaining member, and is accessible adjacent the other portion of the flange forming the other mounting means remote from the mounting means abutting the head of the retaining member.

Preferably, the transverse bore is adapted for receiving a locking means, and preferably, a padlock.

In another embodiment of the invention an abutment element is engageable with the retaining member for locating between the flange of the security cap and the transverse bore of the retaining member and for abutting the flange of the security

cap.

In another embodiment of the invention a bore extends through the abutment element for accommodating the retaining member therethrough.

In another embodiment of the invention at least one spacer element engageable with the retaining member is provided for locating on the retaining member intermediate the abutment element and the padlock.

The invention also provides a tank comprising a neck extending therefrom and defining an open mouth to the tank, and a security cap according to the invention secured to the neck of the tank by the retaining member with the closure element closing the open mouth. Preferably, the retaining member is retained in engagement with the security cap and the neck by a locking means engaging the retaining member.

The invention also provides a locking device for securing a cap to a neck of a tank, the locking device comprising a retaining member for engaging the cap and the neck of a tank, and a locking means engageable with the retaining member for retaining the retaining member in engagement with the cap and the neck. Preferably, the retaining member comprises an elongated pin extending from a head.

In another embodiment of the invention an abutment element is engageable with the pin for abutting one of the cap and the neck at a location opposite to the location at which the head abuts the one of the cap and the neck.

In another embodiment of the invention a bore extends through the abutment element for accommodating the pin therethrough.

In another embodiment of the invention at least one spacer element engageable with the pin is provided for locating on the spacer element intermediate the abutment element and the locking means.

In another embodiment of the invention at least one transverse bore extends substantially transversely through the pin at an end thereof spaced apart from the head for receiving the locking means, which ideally, is a padlock.

The invention also provides a method for securing a cap to a tank of the type comprising a neck extending therefrom and defining an open mouth to the tank, the method comprising placing the cap in or on the neck to close the open mouth defined by the neck and retaining the cap in or on the neck by a retaining member extending transversely through the neck and engageable with the cap.

Preferably, the cap is provided with a flange extending from the periphery thereof, and the retaining member is engageable with the flange. Advantageously, the retaining member is releasably retained in engagement with the cap and the neck by a locking means, which preferably, is a padlock, and ideally, the padlock is engaged with the retaining member in a transverse opening extending through the retaining member.

The invention will be more clearly understood from the following description of an

embodiment thereof, which is given by way of example only, with reference to the accompanying drawings, in which:

Fig. 1 is an exploded perspective view of a security cap according to the invention,

Fig. 2 is an exploded top plan view of a retaining member also according to the invention,

Fig. 3 is a side elevational view of the retaining member of Fig. 2,

Fig. 4 is a perspective view of a tank also according to the invention illustrating the security cap of Fig. 1 secured thereto, and

Fig. 5 is a transverse cross-sectional side elevational view of the portion of the tank of Fig. 4 with the security cap secured thereto.

Referring to the drawings, there is illustrated a tank according to the invention, indicated generally by the reference numeral 1. In this embodiment of the invention the tank 1 is of plastics material and is of the type typically used for storing fuel oil for a domestic central heating system. A neck 3 of circular transverse cross-section extending from the tank 1 defines an open mouth 4 to the tank for facilitating filling of the tank 1 with fuel oil. A security cap according to the invention, indicated generally by the reference numeral 5 secured to the neck 3 securely closes the open mouth 4 in order to prevent unauthorised removal of oil from the tank through the open mouth

4.

The security cap 5 comprises a closure element 7 formed by a circular disc of steel, and a circular flange 8 also of steel extending around and from the closure element 7 substantially perpendicularly therefrom. A pair of spaced apart mounting means, which in this embodiment of the invention are formed by respective portions 9 of the flange 8, which are equi-spaced apart around the flange 8 are provided with respective flange bores 10 for releasably engaging a retaining member 11 also according to the invention extending therethrough and transversely through the neck 3 through corresponding neck bores 12 equi-spaced apart around the neck 3 at 180° intervals.

The retaining member 11 comprises a retaining pin 15 of steel extending from a head 16 also of steel which extends transversely of the retaining pin 15 and is bent at 18 so that opposite wings 19 of the head 16 abut the flange 8 of the security cap 5 adjacent opposite sides of the retaining member 11. A plurality of spaced apart transverse bores 20 extend transversely through the retaining pin 15 for accommodating a locking means, namely, a padlock 21 on the opposite side of the security cap 5 to that against which the head 16 abuts for retaining the retaining member 11 captive in the respective flange and neck bores 10 and 12, and in turn retaining the security cap 5 captive on the neck 3. An abutment member 23 also of steel and of similar shape and construction to the head 16 of the retaining member 11 is provided with a bore 24 for engaging the retaining pin 15 between the padlock 21 and the adjacent portion of the flange 8 of the security cap 5. Side wings 25 of the abutment member 23 abut the flange 8 of the security cap 5 in similar manner as

the wings 19 of the head 16 also abut the flange 8 on the opposite side thereof.

Spacer means, namely, spacer washers 27 are also provided for locating on the retaining pin 15 between the abutment member 23 and the padlock 21 in order that the padlock 21 tightly secures the retaining member 11, the security cap 5 and the neck 3 together.

A lug 28 extends from the flange 8 of the security cap 5 substantially equi-spaced from the flange bores 10, and is alignable with a corresponding lug 29 located on the tank 1 adjacent the neck 3. Both lugs 28 and 29 are provided with corresponding alignable bores 30, and if desired, the lugs 28 and 29 may also be secured by a padlock through the bores 30 thereof.

In use, the security cap 5 is placed on the neck 3 with the flange 8 extending externally around the neck 3, and the closure element 7 of the security cap 5 closing the open mouth 4 of the neck 3. The security cap 5 is oriented on the neck 3 so that the flange bores 10 of the security cap 5 are aligned with the neck bores 12. The retaining member 11 is then engaged with the security cap 5 and the neck 3 by passing the retaining pin 15 through the flange bores 10 and the neck bores 12 until the head 16 of the retaining member 11 abuts the flange 8 of the security cap 5. The abutment member 23 is then passed on to the retaining pin 15 and if necessary, spacer washers 27 are also passed on to the retaining pin 15. The padlock 21 is then passed through the appropriate one of the transverse bores 20 and locked for tightly retaining the security cap 5, the neck 3 and the retaining member 11 in tight secure engagement. If desired, the two lugs 28 and 29 may also be secured by a

separate padlock (not shown).

When it is desired to charge the tank 1 with fuel oil, the padlock 21 is disengaged from the retaining member 11, which is then withdrawn through the respective flange bores 10 and neck bores 12. If the lugs 28 and 29 are locked with a padlock (not shown), the padlock is also removed. The security cap 5 is then removed and the tank 1 is charged with fuel oil. On completion of charging of the tank 1 with the fuel oil, the security cap 5 is again secured to the neck 3 as already described by the retaining member 11 and the padlock 21.

The advantages of the invention are many. A particularly important advantage of the invention is that the security cap 5 is securely retained on the neck 3 of the tank, thereby preventing unauthorised removal of fuel oil through the open mouth of the tank. A problem with tanks of plastics material of the type according to the invention is that the closure caps which close the open mouth of the neck, in general, are of plastics material and are hingedly coupled to suitable brackets of the tank to be hingeable between a closed state closing the open mouth, and an open state providing access to the tank through the open mouth. However, the pivotal mounting of such caps to known tanks is relatively flimsy, and in general, closure caps of known tanks can readily easily be disengaged from the tank, thereby permitting unauthorised removal of fuel oil from the tank.

It is envisaged that in certain cases, instead of providing a security cap 5 of steel as described, it is envisaged that the existing closure cap of the tank may be used and may be bored to provide the flange bores 10 for engaging the retaining pin of the

retaining member 11. Thereafter, securing of the closure cap to the tank 1 would be similar to securing of the security cap according to the invention to the tank 1. In this case the retaining member would be provided as a locking device for locking the existing cap of the tank to the neck thereof.

It will be appreciated that while the security cap according to the invention has been described for use with a domestic fuel oil tank, the security cap may be used in conjunction with any other type of tank or container which would have a neck extending outwardly from the tank and defining an open mouth.

While the tank has been described as being of a type which comprises a particular type of locking system for locking the cap which includes a lug 29 for engaging a corresponding lug 28 on the cap, the security cap according to the invention may be adapted to suit any other type of tank, and even where the tank is provided with such a lug as the lug 29, it is not necessary for the security cap to be provided with a corresponding lug 28, and needless to say where the retaining member 11 is being used with an existing cap to secure the existing cap to a tank, the existing cap may be of any other suitable type, and may be provided on a tank with any other suitable locking arrangement, which may be allowed to become redundant since the cap is secured to the tank by the retaining member according to the invention.

The invention is not limited to the embodiment hereinbefore described, which may be varied in construction and detail.

Claims

1. A security cap for a tank of the type having a neck extending from the tank and defining an open mouth to the tank, the security cap comprising a closure element for closing the open mouth and a pair of mounting means extending from the closure element for engaging an elongated retaining member extending transversely through the neck for retaining the security cap captive on the neck with the closure element closing the open mouth, the retaining member being adapted for facilitating locking of the retaining member in engagement with the mounting means and the neck.

2. A security cap substantially as described herein with reference to and as illustrated in the accompanying drawings.

3. A tank comprising a neck extending therefrom and defining an open mouth to the tank, and a security cap as claimed in Claim 1 or 2 secured to the neck of the tank by the retaining member with the closure element of the security cap closing the open mouth.

4. A method for securing a cap to a tank of the type comprising a neck extending therefrom and defining an open mouth to the tank, the method comprising placing the cap in or on the neck to close the open mouth defined by the neck and retaining the cap in or on the neck by a retaining member extending transversely through the neck and engageable with the cap.

5. A method for securing a cap to a tank, the method being substantially as

described herein with reference to and as illustrated in the accompanying drawings.

F.F. GORMAN & CO.

5

S85620

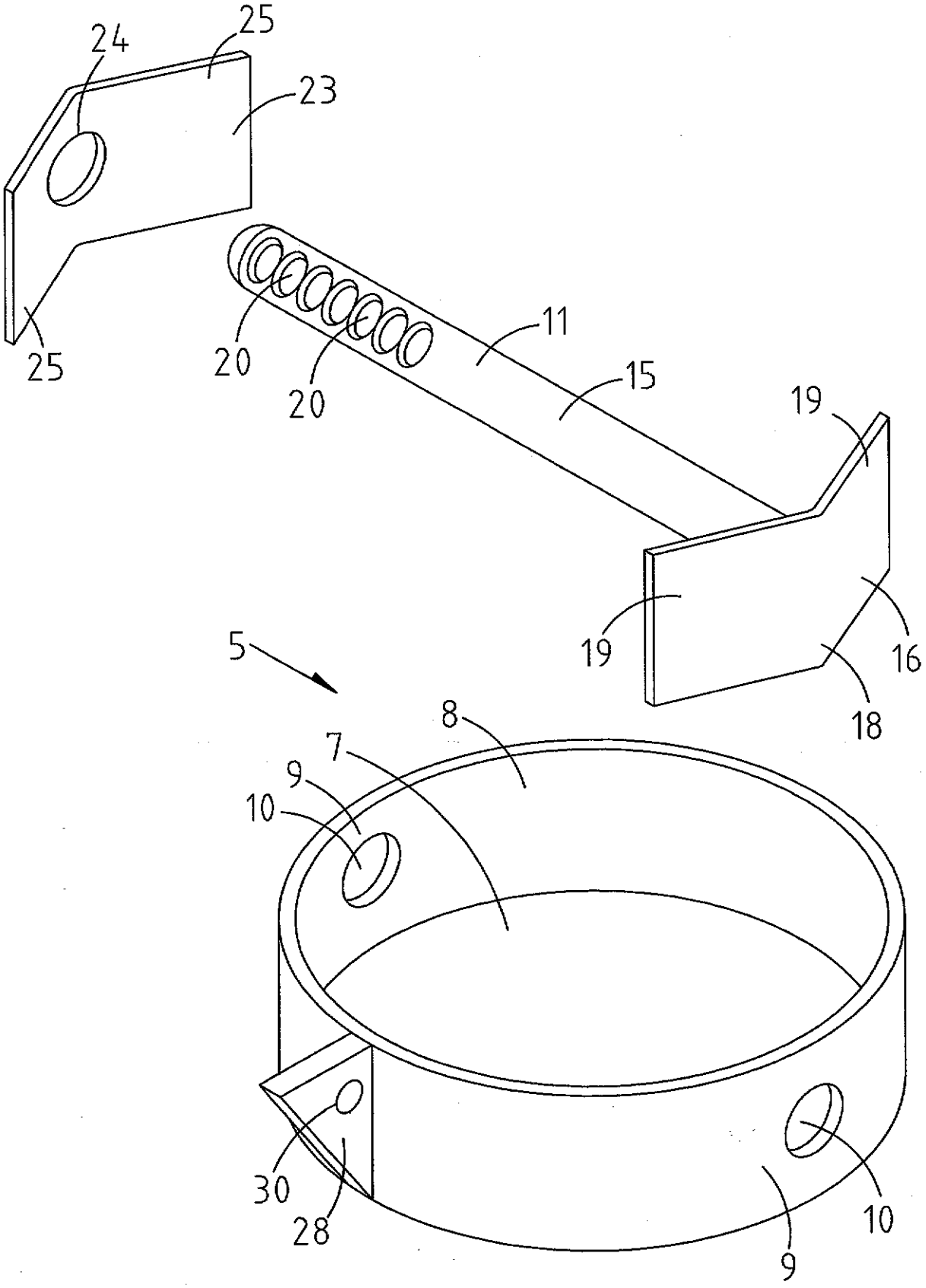

Fig. 1

S85620

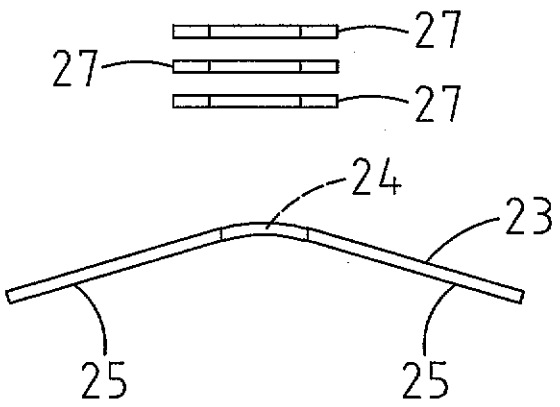

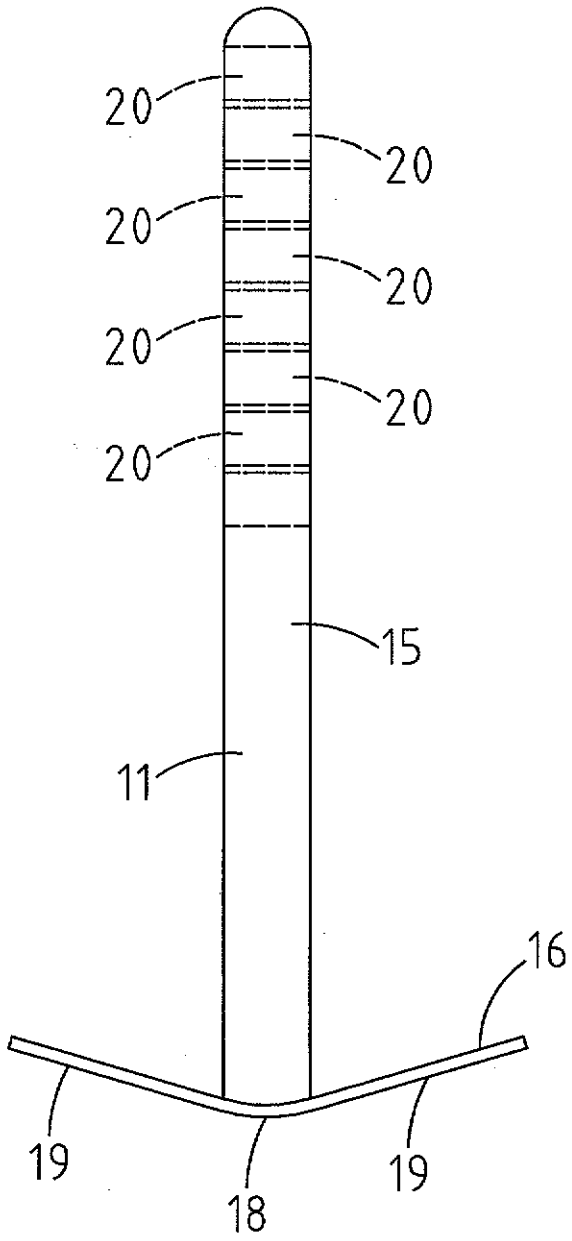

Fig. 2

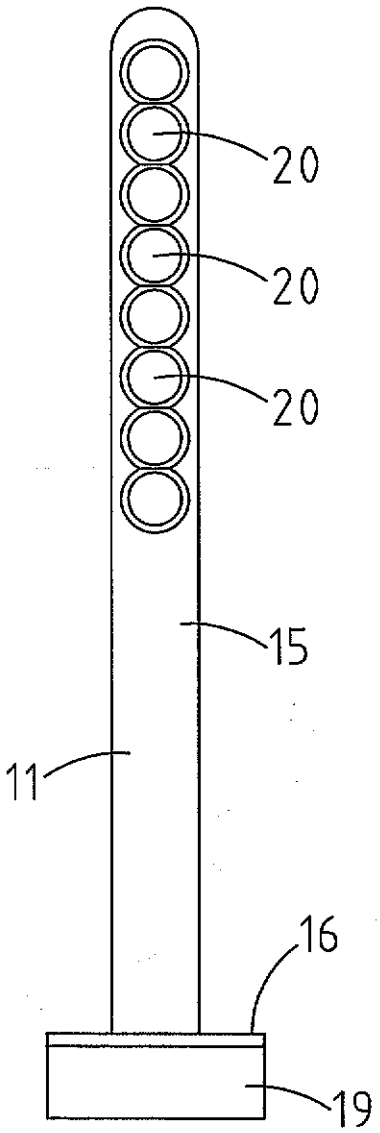

Fig. 3

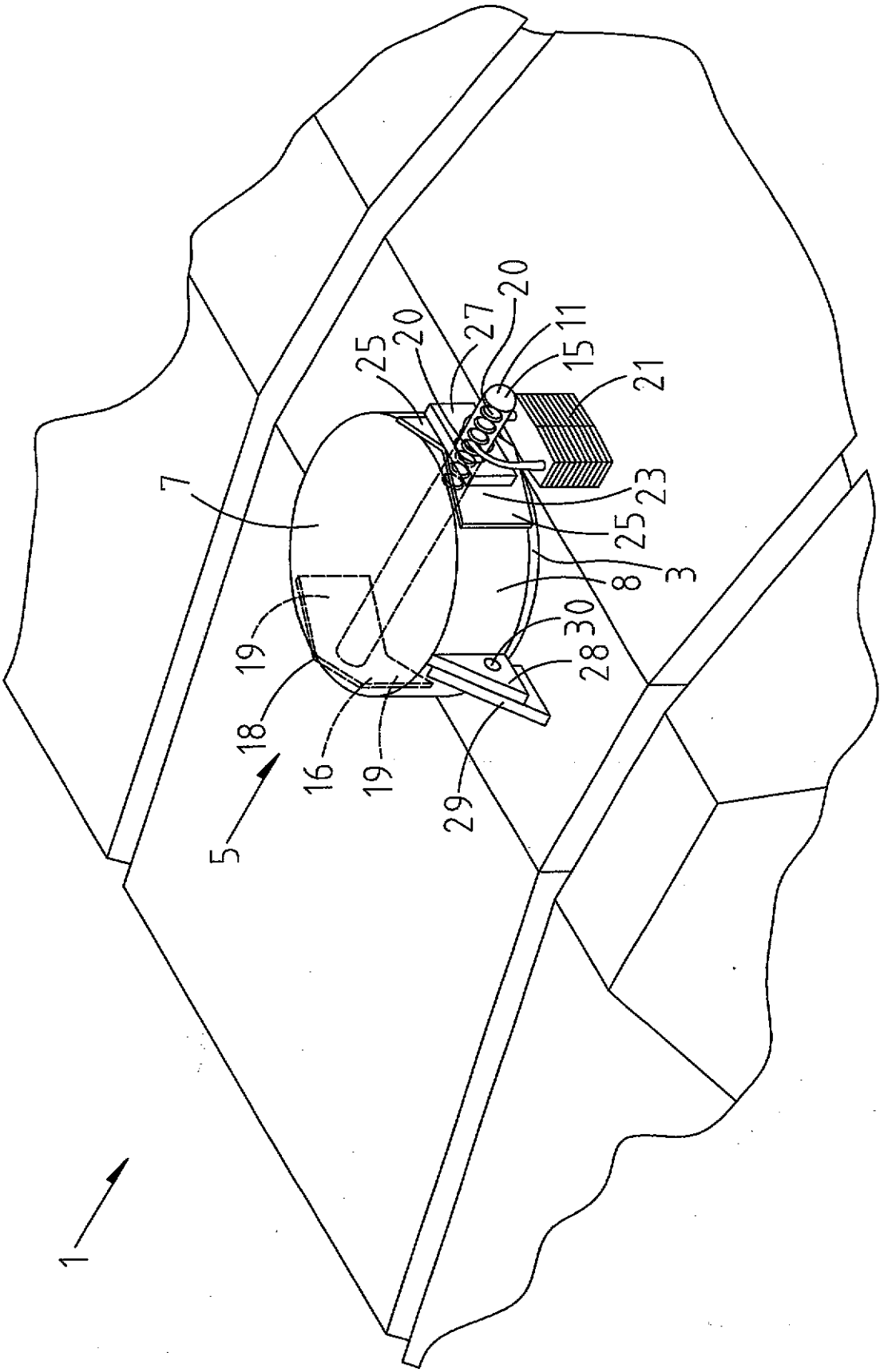

Fig. 4

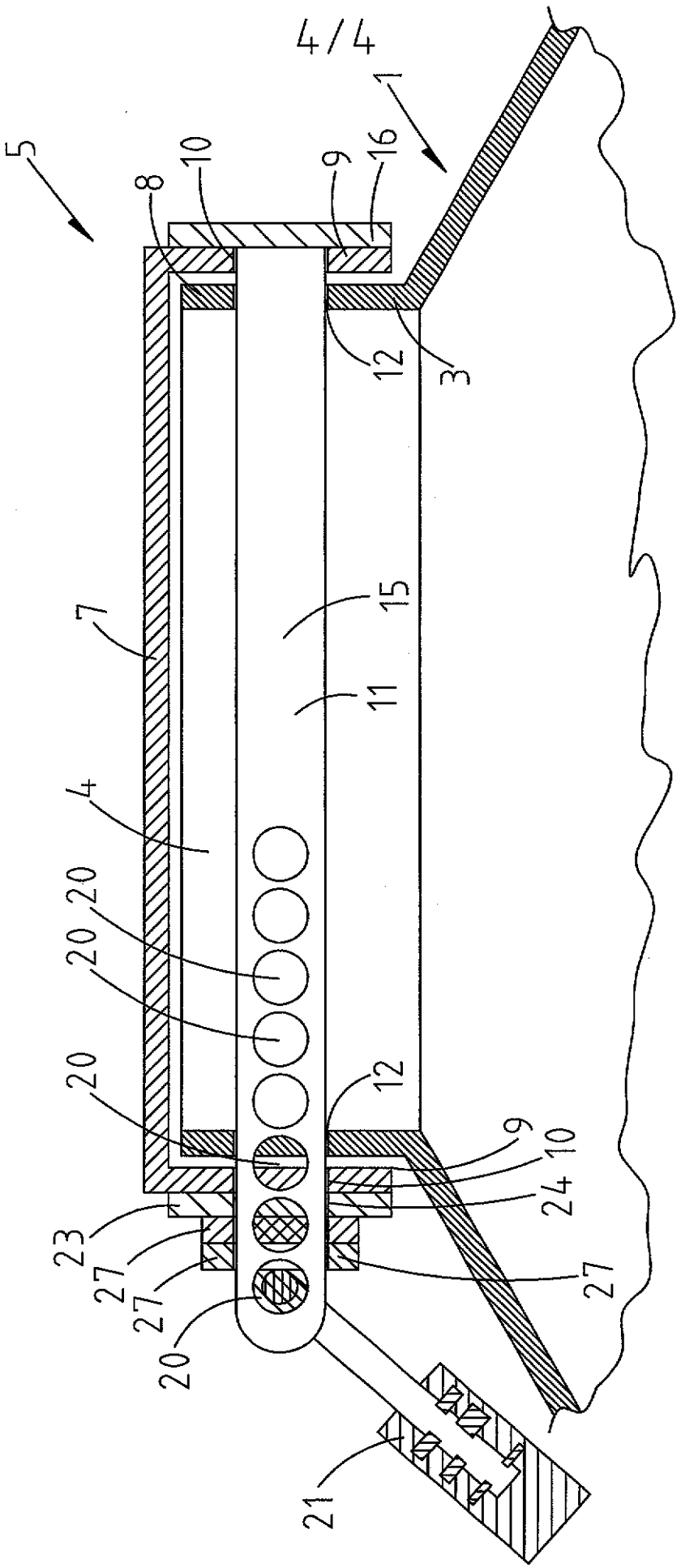

Fig. 5