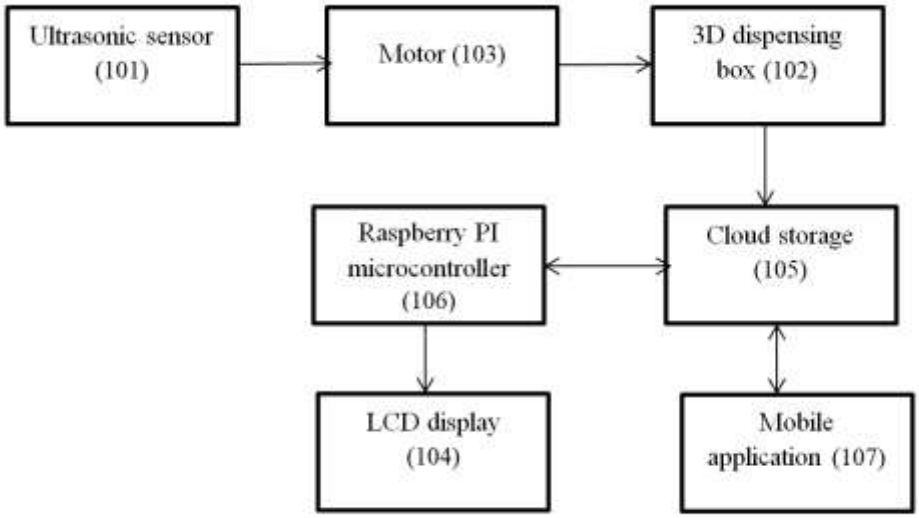

Figure 1 implies the block diagram of SmartMediLink.

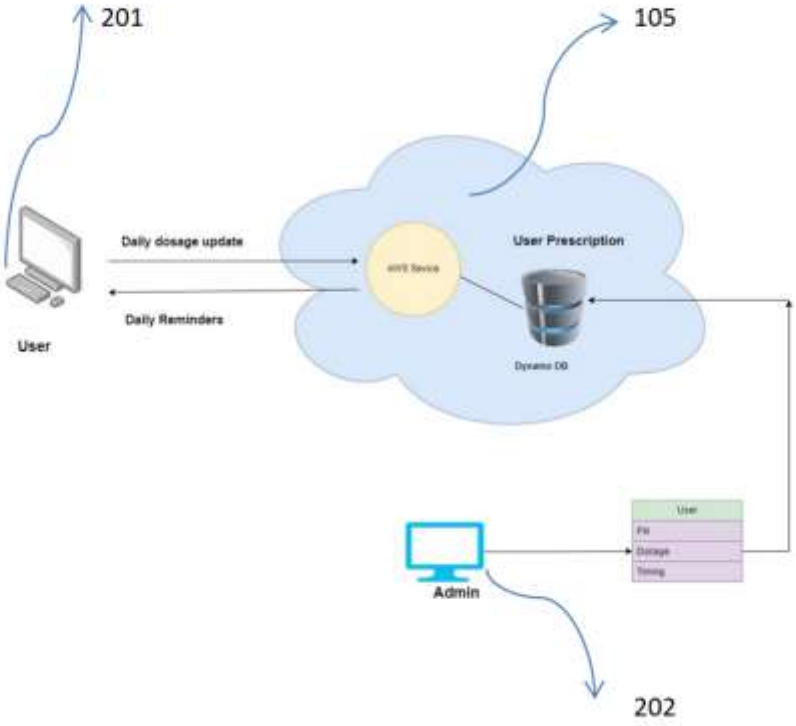

Figure 2 implies the communication between user/admin with cloud storage.

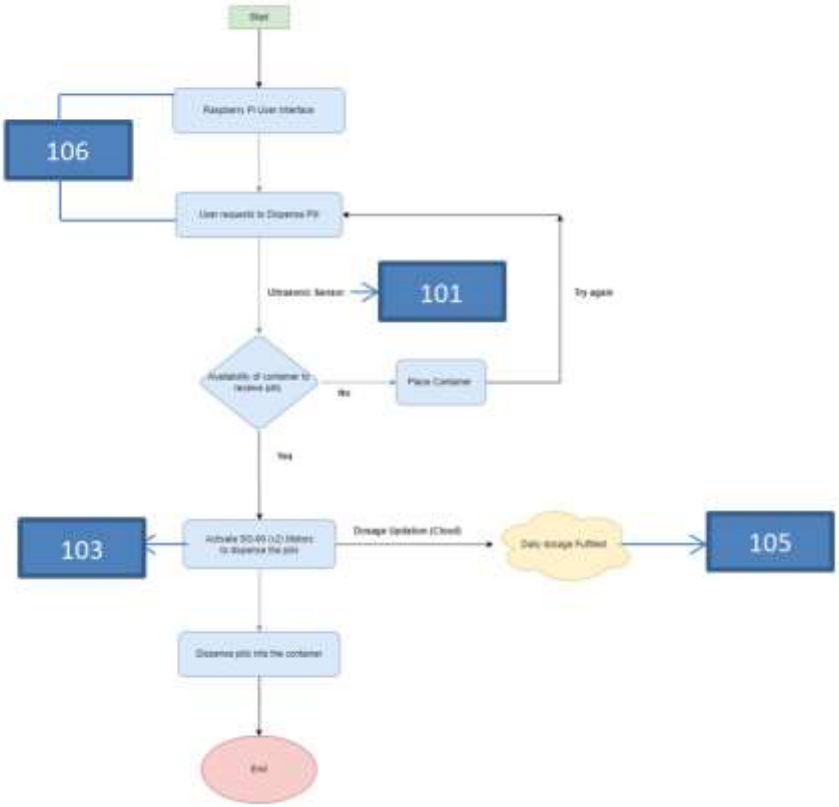

Figure 3 implies the flow chart of SmartMediLink.

FORM 2

THE PATENTS ACT 1970

39 OF 1970

&

THE PATENT RULES 2003

COMPLETE SPECIFICATION

(SEE SECTIONS 10 & RULE 13)

1. TITLE OF THE INVENTION

SmartMediLink

2. APPLICANTS (S)

NAME	NATIONALITY	ADDRESS
School of Computer Science & Engineering, VIT-AP University	Indian	School of Computer Science & Engineering, VIT-AP University, Amaravati, Andhra Pradesh, 522237

3. PREAMBLE TO THE DESCRIPTION

COMPLETE SPECIFICATION

The following specification particularly describes the invention and the manner in which it is to be performed

5

SmartMediLink

[0001] The present invention relates to the field electronics more particularly a system named SmartMediLink for old aged people to dispense pills and provide pill recommendations at correct time.

BACKGROUND

[0002] Background describe the option includes information that may be useful in understanding the present invention. It is not an admission that any of the information provided herein is prior art or relevant to the presently claimed invention, or that any publication specifically or implicitly referenced is prior art.

[0003] All publications herein are incorporated by reference to the same extent as if each individual or patent application were specifically and individually indicated to be incorporated by reference. Where a definition or use of a term in an incorporated reference is inconsistent or contrary to the definition of that term provided herein, the definition of that term provided herein applies and the definition of that term in the reference does not apply.

[0004] Elderly people usually struggle with issues like not eating and taking their medications on time, among other serious issues that lower their quality of life. Due to their growing number and the difficulties they encounter on a daily basis, they can no longer live independently. Thus there is a need of a system that dispenses medicine on time. Existing smart pill dispensers have a generalized dispensing machine , which consists of a mobile robot with a tray, a stationary dispensing robot, and a smartphone carried by the user. Basically mobile controlled evaluating system’s delivery performance. Some have added path following feature which consists of an object detecting sensor(IR) to avoid the obstacle in the path and uses RFID card to link the patient id which hold all the data of the patients such as identity and their prescription. Others have also added feature of intimating regarding intake of the pill using Wi-Fi Technology.

[0005] Another existing technology disclosed in patent no KR20240003354A provides technology that automatically dispenses and dispenses one dose of medicine to reduce the possibility of the medicine breaking, contamination, and oxidation. A roller is positioned at the discharge port of the dispenser and the width of the roller is adjusted to discharge one grain at a time. The roller turns from bottom to top to prevent the discharge port from clogging, and then the roller stops and turns downward to discharge one grain at a time. When the process of storing pills inside the dispenser is completed, preventing the pills from being oxidized by introducing nitrogen into the space where the pills are stored in the dispenser. When dispensing medicine according to a user's command, a scale located in the discharging path determines whether the weight of a single dose of medicine is correct.

[0006] If the weight of the just-discharged pill is significantly less than the stored weight, moving the pill to a storage container provided on the side and then discharging one dose of the medicine again; In the above process, the one dose of medicine can be set in advance by the user using the input device located on the surface of the dispenser. In this process, the weight of the medicine can be directly entered or the one dose of medicine placed on the scale at the bottom of the dispenser and the weight stored. A step of designating using a method. The smart pill dispenser comprising the step of inputting the dosage of the drug through a camera located on the surface of the dispenser or inputting it through a control panel located on the surface of the dispenser.

[0007] Yet another existing technology disclosed in the patent number EA020809B1, exchangeable cartridge containing the pharmaceutical portions (T), the receiving means for the cartridge are in the form of a receiving shaft which extends in the axial direction for insertion of the cartridge , at least one locking means for locking the cartridge , the locking means being a rotatably movable locking lever designed with two arms and having locking lugs on the lower part of the locking lever. The thrust means is designed in such a way that it locks the locking means when inserting the cartridge into the pharmaceutical dispenser

by pressing against an upper part of the locking lever, so that the locking lugs of the locking means are locked with one or several locking cartridge profiles, and the thrust means is designed in such a way that it codes the filling level of the cartridge with medicament portions (T) and, by way of this coding, cancels the locking of the cartridge by cancelling the locking of the locking lever lugs when there are no medicament portions (T) remaining in the cartridge.

[0008] Yet another existing system disclosed in patent no CA2417103C, describes the system can receive pills individually from a reservoir has a cylindrical housing a base with an opening through which a pill may pass. There is a wheel-like component on the base that has a plurality of slots about its outer periphery. The slots are sized to receive a single pill in the form of a tablet, capsule or caplet and are oriented to have walls that are 10~ to 45~ from vertical. A gear mechanism is provided to connect the wheel-like component to a motor to rotate the wheel-like component. That rotation will sequentially align the slots with the opening in the base allowing a pill within the slot to pass from the slot through the opening. The orientation of the slots enables the wheel to receive a wider range of pill sizes without jamming and without dispensing more than one unit from a slot. Preferably, there is a trap door in the medicine feeder that directs a dispersed pill directly to packaging material in a packaging machine.

[0009] The existing technologies mentioned above are complex in nature, highly expensive to manufacture and not old age people friendly.

[0010] The present invention solves above mentioned problem by providing automated dispensing machine named SmartMediLink using ultrasonic sensor combined with a mobile Application which collects pill data from the patient and stores it in a cloud and database.

[0011] As used in the description herein and throughout the claims that follow, the meaning of “a,” “an,” and “the” includes plural reference unless the context clearly dictates

otherwise. Also, as used in the description herein, the meaning of "in" includes "in" and "on" unless the context clearly dictates otherwise.

OBJECTS OF THE INVENTION

[0012] The object of the present invention is to provide a system for old aged people to dispense pills and provide pill recommendations at correct time.

[0013] The object of the present invention is to ensure that no patient especially older ones should miss any kind of dosage leading to any health issues overall.

[0014] The object of the present invention to provide a system to find patterns in missed dosage for providing recommendations to take pills at correct time, using deep learning techniques.

SUMMARY OF THE INVENTION

[0015] In an aspect, the present invention is a smartmedilink system for old aged people to dispense pills and provide pill recommendations at correct time. The ultrasonic sensor is integrated into a 3D dispensing box for dispensing pills by activating a motor , and the ultrasonic sensor detect presence of the 3D dispensing box to prevent accidental loss of pills.

[0016] In an aspect the cloud storage store data of medicine intake comprising of quantity of pills, time of pills in taking and missed pill dosage details. The Raspberry PI microcontroller receives data from the cloud storage and analysis the data to find patterns in missed dosage for providing recommendations to take pills at correct time, using deep learning techniques.

[0017] In another aspect the cloud storage is configured with a mobile application for accessing the medicine intake data by the user and doctors.

BRIEF DESCRIPTION OF THE DRAWINGS

[0018] The accompanying drawings are included to provide a further understanding of the present disclosure and are incorporated in and constitute a part of this specification. The drawings illustrate exemplary embodiments of the present disclosure and, together with the, serve to explain the principles of the present disclosure.

[0019] Figure 1 implies the block diagram of SmartMediLink.

[0020] Figure 2 implies the communication between user/admin with cloud storage.

[0021] Figure 3 implies the flow chart of SmartMediLink.

DETAILED DESCRIPTION

[0022] The following description includes the preferred best mode of one embodiment of the present invention. It will be clear from this description of the invention that the invention is not limited to these illustrated embodiments but that the invention also includes a variety of modifications and embodiments thereto. Therefore, the present description should be seen as illustrative and not limiting. While the invention is susceptible to various modifications and alternative constructions, it should be understood, that there is no intention to limit the invention to the specific form disclosed, but, on the contrary, the invention is to cover all modifications, alternative constructions, and equivalents.

[0023] Figure 1 implies the block diagram of SmartMediLink. The ultrasonic sensor (101) of the present invention is integrated into a 3D dispensing box (102) for dispensing pills by activating a motor (103), and the ultrasonic sensor (101) detect presence of the 3D dispensing box (102) to prevent accidental loss of pills. The cloud storage (105) store data of medicine intake comprising of quantity of pills, time of pills in taking and missed pill

dosage details. The Raspberry PI microcontroller (106) receives data from the cloud storage (105) and analysis the data to find patterns in missed dosage for providing recommendations to take pills at correct time, using deep learning techniques, the cloud storage (105) is configured with a mobile application (107) for accessing the medicine intake data by the user and doctors.

[0024] In aspect a LCD display (104) to display current time and next due time of taking pills. The LCD display (104) is an alarming light and starts to blink when it is time to take the pill. The 3D dispensing box (102) comprising of a plurality of containers embedded on the 3D dispensing box (102), filled with a plurality of pills according to doctor's prescription and dispenses the pills as per user's need after receiving signals from the Raspberry PI microcontroller. The 3D dispensing mechanism ensures only the designated amount of pills is dispensed into the container to prevent over dosage.

[0025] In an aspect The Raspberry PI microcontroller (106) sends a Gmail notification to the user containing the medicine intake data and dispense the missed medicine again after an interval of 5 minutes. The Raspberry PI microcontroller (106) is configured with a speaker for alerting the user and it update the cloud storage (105) if there is any change in medicine dosage.

[0026] In an aspect a maximum combination of four pills can be taken, the dispensing box has 4 containers which are filled with the four desired pills according to the doctor's prescription. Then in the SmartMediLink App need to set the Pillname, PillTime, and No_of_Dosages to be taken and click "Add Pill" button to send it and store to the cloud servers or storage (105). A WebUI can be accessed by the doctors or nurses to monitor and analyse the data of patients or user and can change the prescription as and when needed.

[0027] Figure 2 implies the communication between user/admin with cloud storage. The user (201) gave daily doss update to the cloud storage or server (105). The cloud

server is an Amazon web service (AWS) cloud server, but the present invention do not limited to the said cloud server. The cloud server is configured with a dynamic data base and stores user's prescriptions. The admin/doctors (202) give user details comprising of pill details, dosage details and timing of intake to the cloud server (105).

[0028] Figure 3 implies the flow chart of SmartMediLink. The raspberry pi microcontroller (106) has an interface, through the interface it send user's request to dispense pills. The raspberry pi microcontroller (106) send signal to check weather where the 3D dispensing box is available via ultrasonic sensor (101). If the availability of container is not detected by the raspberry pi microcontroller (106), the user can try again by placing the container once again for dispensing the medicine. If the availability of container is detected by the raspberry pi microcontroller (106), send signals to the motor most preferably an active SG 90 motors (103) to dispense the pill to the container. The daily dosage updates will be given to the cloud (105) as per user requirements.

[0029] In an aspect all data stored in the cloud storage (AWS) (105) which can be accessed using the SmartPill mobile Application. This application can also be used to change any particular pill configuration.

[0030] In any embodiment described herein, the open-ended terms "comprising," "comprises," and the like (which are synonymous with "including," "having" and "characterized by") may be replaced by the respective partially closed phrases "consisting essentially of," consists essentially of," and the like or the respective closed phrases "consisting of," "consists of, the like.

[0031] As used herein, the singular forms "a", "an", and "the" designate both the singular and the plural, unless expressly stated to designate the singular only.

[0032] Although the present invention has been particularly described with reference to implementations discussed above, various changes, modifications and Substitutes are can

be made. Accordingly, it will be appreciated that in numerous instances some features of the invention can be employed without a corresponding use of other features. Further, variations can be made in the number and arrangement of components illustrated in the figures discussed above.

We Claim:

1. A smartmedilink system for old aged people to dispense pills and provide pill recommendations at correct time, the system comprising of:

an ultrasonic sensor (101) integrated into a 3D dispensing box (102) for dispensing pills by activating a motor (103), wherein the ultrasonic sensor (101) detect presence of the 3D dispensing box (102) to prevent accidental loss of pills;

a LCD display (104) to display current time and next due time of taking pills;

a cloud storage (105) for storing data, wherein the cloud storage (105) store data of medicine intake comprising of quantity of pills, time of pills in taking and missed pill dosage details; and

an Raspberry PI microcontroller (106) configured with the ultrasonic sensor (101), the LCD display (104) and the cloud storage (105);

wherein the Raspberry PI microcontroller (106) receives data from the cloud storage (105) and analysis the data to find patterns in missed dosage for providing recommendations to take pills at correct time, using deep learning techniques,

wherein the 3D dispensing box (102) comprising of a plurality of containers embedded on the 3D dispensing box (102), filled with a plurality of pills according to doctor's prescription and dispenses the pills as per user's need after receiving signals from the Raspberry PI microcontroller, and

wherein the cloud storage (105) is configured with a mobile application (107) for accessing the medicine intake data by the user and doctors.

2. The smartmedilink system for old aged people to dispense pills and provide pill recommendations at correct time as claimed in claim 1, wherein the LCD display (104) is an alarming light and starts to blink when it is time to take the pill.

3. The smartmedilink system for old aged people to dispense pills and provide pill recommendations at correct time as claimed in claim 1, wherein the Raspberry PI microcontroller (106) sends a Gmail notification to the user containing the medicine intake data.

4. The smartmedilink system for old aged people to dispense pills and provide pill recommendations at correct time as claimed in claim 1, wherein the Raspberry PI microcontroller (106) dispense the missed medicine again after an interval of 5 minutes.

5. The smartmedilink system for old aged people to dispense pills and provide pill recommendations at correct time as claimed in claim 1, wherein the Raspberry PI microcontroller (106) is configured with a speaker for alerting the user.

6. The smartmedilink system for old aged people to dispense pills and provide pill recommendations at correct time as claimed in claim 1, wherein the Raspberry PI microcontroller (106) update the cloud storage (105) if there is any change in medicine dosage.

ABSTRACT

SmartMediLink

The present invention is a smartmedilink system for old aged people to dispense pills and provide pill recommendations at correct time. The ultrasonic sensor (101) of the present invention is integrated into a 3D dispensing box (102) for dispensing pills by activating a motor (103), and the ultrasonic sensor (101) detect presence of the 3D dispensing box (102) to prevent accidental loss of pills. The cloud storage (105) store data of medicine intake comprising of quantity of pills, time of pills in taking and missed pill dosage details. The Raspberry PI microcontroller (106) receives data from the cloud storage (105) and analysis the data to find patterns in missed dosage for providing recommendations to take pills at correct time, using deep learning techniques, the cloud storage (105) is configured with a mobile application (107) for accessing the medicine intake data by the user and doctors.

Fig 1 will be the reference.

Figure 1

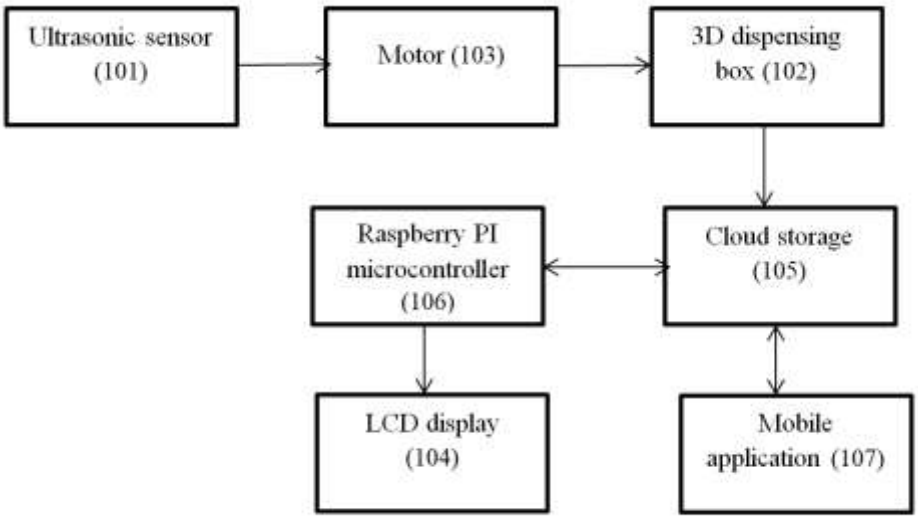

Figure 1 implies the block diagram of SmartMediLink.