(12) INTERNATIONAL APPLICATION PUBLISHED UNDER THE PATENT COOPERATION TREATY (PCT)

(19) World Intellectual Property Organization
International Bureau

(43) International Publication Date
11 November 2021 (11.11.2021)

WIPO | PCT

(10) International Publication Number
WO 2021/225557 A2

(51) International Patent Classification:
Not classified

(21) International Application Number:
PCT/TR2021/050450

(22) International Filing Date:
10 May 2021 (10.05.2021)

(25) Filing Language: Turkish

(26) Publication Language: English

(30) Priority Data:
2020/07246 08 May 2020 (08.05.2020) TR

(71) Applicant: **YAPIRAY DEMİRYOLU İNŞAAT SİSTEMLERİ SANAYİ VE TİCARET ANONİM ŞİRKETİ** [TR/TR]; Kısıklı Mah. Alemdağ Cad. Masaldan İş Merkezi No:60 E Blok D.5-9 K.1, Üsküdar/İstanbul (TR).

(72) Inventor: **KOÇ, Enver**; Kısıklı Mah. Alemdağ Cad. Masaldan İş Merkezi No:60 E Blok D.5-9 K.1, Üsküdar/İstanbul (TR).

(74) Agent: **DESTEK PATENT, INC.**; Konak Mahallesi Kudret Sokak Ruzi Plaza No:20 Kat:6, Beşevler, 16110 Nilüfer/Bursa (TR).

(81) Designated States *(unless otherwise indicated, for every kind of national protection available)*: AE, AG, AL, AM, AO, AT, AU, AZ, BA, BB, BG, BH, BN, BR, BW, BY, BZ, CA, CH, CL, CN, CO, CR, CU, CZ, DE, DJ, DK, DM, DO, DZ, EC, EE, EG, ES, FI, GB, GD, GE, GH, GM, GT, HN, HR, HU, ID, IL, IN, IR, IS, IT, JO, JP, KE, KG, KH, KN, KP, KR, KW, KZ, LA, LC, LK, LR, LS, LU, LY, MA, MD, ME, MG, MK, MN, MW, MX, MY, MZ, NA, NG, NI, NO, NZ, OM, PA, PE, PG, PH, PL, PT, QA, RO, RS, RU, RW, SA, SC, SD, SE, SG, SK, SL, ST, SV, SY, TH, TJ, TM, TN, TR, TT, TZ, UA, UG, US, UZ, VC, VN, WS, ZA, ZM, ZW.

(84) Designated States *(unless otherwise indicated, for every kind of regional protection available)*: ARIPO (BW, GH, GM, KE, LR, LS, MW, MZ, NA, RW, SD, SL, ST, SZ, TZ, UG, ZM, ZW), Eurasian (AM, AZ, BY, KG, KZ, RU, TJ, TM), European (AL, AT, BE, BG, CH, CY, CZ, DE, DK, EE, ES, FI, FR, GB, GR, HR, HU, IE, IS, IT, LT, LU, LV, MC, MK, MT, NL, NO, PL, PT, RO, RS, SE, SI, SK, SM, TR), OAPI (BF, BJ, CF, CG, CI, CM, GA, GN, GQ, GW, KM, ML, MR, NE, SN, TD, TG).

(54) Title: UNDERGROUND CRANE SYSTEM

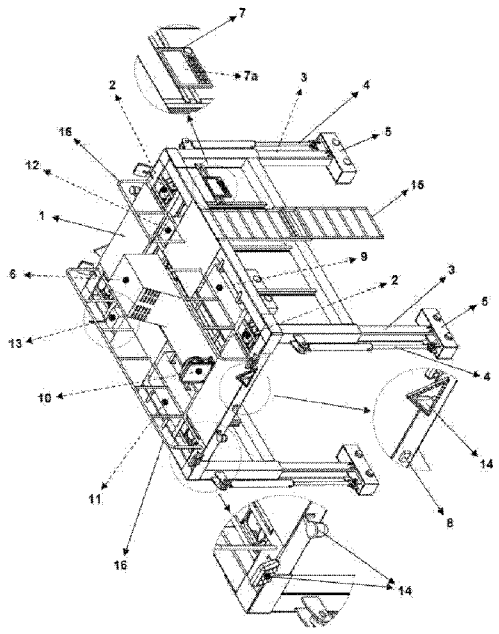

Figure 1

(57) Abstract: An underground crane system that is suitable for use in tunnels with different opening values extending perpendicular to the ground and enables the material to be used in the work area to be transported from one location to another and moved in two different directions on the axis perpendicular to the floor, comprises the following; a body (1) that allows the system elements to be transported, a lifting unit (2) that allows material to be hold, lifted away from the ground or lowered closer to the ground; feet (3) that allows the body (1) to be positioned on the ground or on the rail, each of which is adjustable in such a way that the length value is the same or different with the other, extending on the axis perpendicular to the floor; first movement element (4) that allow the length value of the feet (3) to be adjusted; second movement element (5) that enables the system to be advanced on the ground or rail; movement unit (6) that provides the energy required to move the lifting unit (2), first movement elements (4) and second movement (5) elements; control unit (7) that determines the distance information between the body (1) and/or material and the ground and the distance information of the system on the ground or rail, enables the movement of the lifting unit (2), the first movement elements (3) and the second movement elements (5) to be started or stopped in accordance with the determined distance information.

WO 2021/225557 A2

[Continued on next page]

Published:

— *without international search report and to be republished upon receipt of that report (Rule 48.2(g))*

— *in black and white; the international application as filed contained color or greyscale and is available for download from PATENTSCOPE*

UNDERGROUND CRANE SYSTEM

Technical Field of the Invention

The present invention relates to an underground crane system that works in harmony with the changing work area sizes on work sites with limited workspace, ensuring that the materials to be used in the work area are distanced from the ground, are moved toward to the ground, and are transported from one location to another.

The invention is particularly related to an underground crane system that is suitable for use in closed work areas such as tunnels, channels, pits and similar with space limitations, works in harmony with the work areas of varying sizes in the workplace, ensures that materials of various sizes such as precast panels and railway panels to be used in the work area are safely and quickly distanced from the ground, moved toward to the ground, and carried to a desired location in the work area.

Present State of the Art

Carrying/crane systems with different sizes and operating properties are used so as to transport precast elements or panels used during the construction of railways and to place the same on the ground. Current carrying/crane systems used in railway construction are generally used for above ground floor or railway installing operations, they are also used in work fields with a width suitable for the operation of the crane system, such as large railway tunnels or bridges. During the construction of the railway line, transport vehicles containing movement elements suitable for moving on wheels, pallets or rails are used so as to transport railway panels, precast panels or similar materials to a location on the work site. Then, the materials that are transported to the appropriate position are taken from said transport vehicle with the help of a line laying machine which contains movement elements suitable to move on wheels, tracks or rails and placed on the ground to form the continuation of the installed railway line. However, it is not possible to use the existing line laying machines in work areas with a narrower diameter and limited working area compared to railway tunnels such as metro tunnels due to their operating functions and dimensions. It is not possible to move the line laying machines which are appropriate for use in subway tunnels, on floors without rail tracks, due to the use of moving elements suitable for moving on the rail. Furthermore, disadvantages occur such as failure of

said adjustment of the rail line whose level and axis adjustment has been made and damage to existing laid panels as a result of advancing said line laying machines being on the rail line with incomplete panel sub-concrete or fillings and placing a point load on the location due to the weight of the materials carried on it.

Portal crane systems, which are used as an alternative to the known line laying machines, ensures the materials to be used to be transported to a desired location by moving on the rail or directly on the ground so as to be used in work areas with different physical properties. Furthermore, said portal crane systems can be used in work areas with a narrower diameter and limited work area compared to railway tunnels such as metro tunnels. However, the operation/movement of said portal crane systems inside the subway tunnels is very difficult due to the variation of the height distance between the floor and the ceiling in the tunnel along the tunnel, recesses, protrusions and slopes on the floor or the height differences called “super elevation" between the existing laid rails. For this reason, it is not possible to install the rail track efficiently and quickly. Furthermore, negative, and dangerous situations occur such as the electrical elements and the engine being negatively affected by moisture or leaking water in the tunnel and accidents that put the life of the users in danger as a consequence of using electric motors to provide movement in existing portal cranes.

In the patent document numbered CN102408069A, in the state of the art, a portal crane which is suitable for moving on the rail and enables the lifting and transporting of building materials, is disclosed. Said portal crane comprises the following; two support elements extending perpendicular to the floor and wheels that enable support elements to move on the rail, elbow element in connection with the support elements and movable in a way to move closer to and away from the floor, holding element that is connected to the elbow element with the help of steel ropes and ensures holding the building materials and rollers that allow the wire rope to be wound or unwound on the steel rope so as to move the holding element in a vertical axis to the ground. Furthermore, it also comprises a control element that ensures to control the portal crane by a computer. However, in said document, there is no statement that said portal crane should be propelled on a ground without rail line or suitable for use in physical conditions such as sloping ground in subway tunnels or in a humid environment. Furthermore, no solution regarding prevention of disadvantages such as failure of said adjustment of the rail line whose level and axis adjustment has been made and damage to existing laid panels as a result of advancing portal crane on the rail line with incomplete panel sub-concrete or fillings and placing a point load on the location due to the weight of the materials carried on it, is provided with said portal crane.

As a result, an underground crane system which is particularly suitable for use in tunnels with varying height values perpendicular to the ground, ensures safe and proper lowering of the transported material to the ground by advancing without being affected by recesses, protrusions or slopes on the ground and at the same time works safely without being affected by external factors such as moisture and water leakage in the tunnel, is required to be developed.

Aim of the Invention

The present invention is related to an underground crane system which fulfills the abovementioned requirements, eliminates all disadvantages, and brings some additional advantages.

The main aim of the inventive underground crane system is to obtain an underground crane system that provides fast and comfortable transportation of materials of different sizes and weights to be used in the work area in tunnels of different physical dimensions by adjusting the height value that extends perpendicular to the floor.

Another aim of the invention is to obtain an effective underground crane system that provides rapid transportation of the material to be used in the work area by progressing without being affected by the difference in recesses, protrusions, slopes and elevations on the ground or the difference in distance between the rails laid on the ground.

Another aim of the invention is to obtain an efficient underground crane system that ensures the materials to be used in the work area to be safely placed in the transported location and in different positions.

Another aim of the invention is to obtain a safe underground crane system that prevents damage to users and the environment without being affected by external factors such as moisture, water leakage in the tunnel during its operation.

Another aim of the invention is to obtain a portable underground crane system that can be easily transported inside or outside the tunnel.

In order to achieve the above-mentioned objectives in the most general way, the invention is an underground crane system that is suitable for use in tunnels with different opening values extending perpendicular to the ground and enables the material to be used in the work area to be transported from one location to another and moved in two different directions on the axis

perpendicular to the floor, comprises the following; at least one body that allows the system elements to be transported, at least one lifting unit that allows material to be hold, lifted away from the ground or lowered closer to the ground; at least two feet that allow the body to be positioned on the ground or on the rail, each of which is adjustable in such a way that the length value is the same or different with the other, extending on the axis perpendicular to the floor; at least two first movement elements that allow the length value of the feet to be adjusted; at least two second movement elements that enable the system to be advanced on the ground or rail; at least one movement unit that provides the energy required to move the lifting unit, first movement element and second movement element; at least one control unit that determines the distance information between said body and/or said material and the ground and the distance information of said system on the ground or rail, enables the movement of the lifting unit, the first movement elements and the second movement elements to be started or stopped in accordance with the determined distance information.

The structural and characteristic features of the present invention will be understood clearly by the following drawings and the detailed description made with reference to these drawings and therefore the evaluation shall be made by taking these figures and the detailed description into consideration.

Figures Clarifying the Invention

In order to understand the advantages of the present invention with its structure and additional elements, it shall be evaluated with the following defined figures.

Figure – 1 is a perspective view of the inventive underground crane system.
Figure – 2 is a section view of the inventive underground crane system.
Figure – 3 is another section view of the inventive underground crane system.

Part References

1. Body
2. Lifting unit
3. Foot
4. First movement element
5. Second movement element
6. Movement unit
7. Control unit

7a. Input element
8. Detection element
9. Storage element
10. Cooling element
11. Fuel storage element
12. Second drive element
13. Protection element
14. Warning element
15. Climbing element
16. Safety element

Detailed Description of the Invention

In this detailed description, the preferred embodiments of the inventive underground crane system is described only for clarifying the subject matter in a manner such that no limiting effect is created.

The underground crane system whose illustrative view is given in Figure 1, which is developed with the present invention, is suitable for use in tunnels with different opening values extending perpendicular to the ground and enables the material to be used in the work area to be transported from one location to another and moved in two different directions on the axis perpendicular to the floor, comprises the following; at least one body (1) that extends on the plane parallel to the floor, is suitable for the connection of the system elements on it and enables the elements belonging to the system to be carried, is preferably in the form of a quadrangle; at least one lifting unit (2) that ensures to hold the material connected with the body (1) to be used in the work area, to be lifted away from the ground or lowered by bringing the same closer to the ground, is preferably in the form of a crane; at least two feet (3) each of which extends from the body (1) towards the ground in connection with the body (1), enables the body (1) to be positioned on the ground or rail, adjusts the distance between the body (1) and the floor and is adjustable in such a way that the length value of each extending on the axis perpendicular to the floor is the same or different from the other so as to position the body (1) to be parallel to the floor; at least one first movement element (4) each of which is connected with one of the feet (3) and enables the adjustment of the length value of the feet (3) lying on the axis perpendicular to the floor, is preferably hydraulic piston; at least one second movement element (5) that is connected with the edge of the feet (3) which is close to the floor, is suitable to move on the ground or rail, enables the system to be moved on the ground or rail so as to move the material to be used on the work area from one location to another, is preferably in

wheel or track form; at least one movement unit (6) to which the lifting unit (2), the first movement elements (4) and/or the second movement elements (5) are connected, provides the energy required for the movement of the lifting unit (2), first movement elements (4) and the second movement elements (5); at least one control unit (7) that is positioned on the body (1) and connected with the movement unit (6), determines the information of the distance between said body (1) and/or said material and the ground and the distance information of said system to be advanced on the ground or rail, enables the movement of the lifting unit (2), the first movement elements (3) and the second movement elements (5) to be initiated or stopped in accordance with the determined distance information.

In an exemplary embodiment of the underground crane system developed with the present invention, operating the movement unit (6) in accordance with the movement information that is entered by the user to the control unit (7) and determines the distance between the body (1) and the ground and the adjustment of the length values of the legs (3) on the axis extending perpendicular to the ground by means of the first movement elements (4) are provided. Therefore, the distance value between the body (1) and the ground is determined in accordance with the distance value of the tunnel perpendicular to the ground and the underground crane system is provided to advance and operate easily inside the tunnel. Meanwhile, it is ensured that the body (1) is positioned parallel to the ground without being affected by the recesses, protrusions, slope elevation difference or the distance difference between the rails by means of adjusting the length values of the feet (3) of each of the first movement elements (4) independently from each other. Subsequently, it is ensured that a material to be used in the work area is kept and lifted by removing it from the ground again in accordance with the distance information entered into the control unit (7) and by means of the lifting unit (2). It is ensured that the system is advanced on the ground or rail and the material to be used in the work area is moved to a desired location by means of the control unit (7) and the second movement elements (5). It is ensured that the material is lowered on the ground to be used after transportation process by means of the control element (7) and the lifting unit (2). Meanwhile, it is ensured that the material is lowered on the ground in a desired position by adjusting the lengths of the legs (3) independently from each other by means of the first movement elements (4). After the process, the body (1) is approximated to the ground and brought into a form appropriate for easy handling inside or outside the tunnel by adjusting each of the feet (2) to the lowest length value by means of the control unit (7) and the first movement elements (4).

In a preferred embodiment of the invention, said underground crane system comprises; at least one movement unit (6) that provides the energy required for the operation of said lifting unit (2),

said first movement elements (4) and/or said second movement elements (5), includes a first drive element, preferably an internal combustion diesel engine.

In a preferred embodiment of the invention, said underground crane system comprises; at least one movement unit (6) that is connected with said first drive element, provides to obtain pressure force for moving said lifting unit (2), said first movement elements (4) and/or said second movement elements (5), enables a fluid material, preferably oil, to be sent to said lifting unit (2), said first movement elements (4) and/or said second movement elements (5), contains at least one pressure element, which is a hydraulic pump.

In another preferred embodiment of the invention, said underground crane system comprises; at least one control unit (7) comprising at least one input element (7a), preferably a touch screen, that receives movement information entered by the user.

In another preferred embodiment of the invention, said underground crane system comprises; at least one detection element (8), preferably an angle sensor, which is connected with said control unit (7) and enables the detection of recesses, protrusions, slopes and level difference values on the ground and their transmission to said control unit (7).

In another preferred embodiment of the invention, said underground crane system comprises; at least one control unit (7) comprising at least one control element that is preferably a programmable logic control (PLC) that controls the operation of said lifting unit (2), said first movement elements (4) and /or said second movement elements (5) in accordance with the information and/or values received from said input element (7a) and/or said detection element (8).

In an alternative embodiment of the invention, said underground crane system comprises; at least one storage element (9) that is located on said body (1), is connected with said pressure element and enables said fluid material to be stored.

In another preferred embodiment of the invention, said underground crane system comprises; at least one cooling element (10) that is located on said body (1) and connected with said storage element (9) and/or said pressure element, ensures cooling of said fluid material.

In another preferred embodiment of the invention, said underground crane system comprises; at least one fuel storage element (11) that is located on said body (1), connected with said first drive element and stores the fuel required for the operation of said first drive element.

In another preferred embodiment of the invention, said underground crane system comprises; at least one second drive element (12) which is located on said body (1) and is a generator that enables electricity generation. Thus, the required energy is obtained easily and quickly in case of need for electrical energy in the work area.

In another preferred embodiment of the invention, said underground crane system comprises; at least one protection element (13) that is located on said body (1), is an electrical panel that provides the positioning and protection of cables and/or electrical elements that provide electrical energy and signal transmission and protection from external factors.

In another preferred embodiment of the invention, said underground crane system comprises; at least one warning element (14), preferably a signboard, lamp and/or loudspeaker, that provides visual and/or auditory warning of the surrounding users during the operation of said system.

In another preferred embodiment of the invention, said underground crane system comprises; at least one climbing element (15), preferably a telescopic ladder, which is connected with said body (1) and helps the user to climb onto said body (1) from the ground and return to the ground.

In an alternative embodiment of the invention, said underground crane system comprises; at least one safety element (16) which is positioned along the edges of said body (1) in such a way that it extends perpendicular to the floor and which is in the form of a guardrail on said body (1) that prevents the user from falling.

The underground system developed with the present invention is suitable for use in tunnels with varying height values perpendicular to the ground it is ensured that the transported material is lowered to the ground in a safe and desired position without being affected by recesses, protrusions or slopes on the ground. Also, an effective, efficient, practical and safe underground crane system that provides the safety of the users and the environment without being affected by external factors such as moisture, water leakage in the tunnel during its operation is provided.

CLAIMS

1. An underground crane system which is suitable for use in tunnels with different opening values extending perpendicular to the ground and enables the material to be used in the work area to be transported from one location to another and moved in two different directions on the axis perpendicular to the floor, **characterized in comprising**

- at least one body (1) that extends on the plane parallel to the floor, is suitable for the connection of the system elements thereon and enables the elements belonging to the system to be carried;
- at least one lifting unit (2) that ensures to hold the material connected with the body (1) to be used in the work area, to be lifted away from the ground or lowered by bringing the same closer to the ground;
- at least two feet (3) each of which extends from the body (1) towards the ground in connection with the body (1), enables the body (1) to be positioned on the ground or rail, adjusts the distance between the body (1) and the floor and is adjustable in such a way that the length value of each extending on the axis perpendicular to the floor is the same or different from the other so as to position the body (1) to be parallel to the floor;
- at least one first movement element (4) each of which is connected with one of the feet (3) and enables the adjustment of the length value of the feet (3) lying on the axis perpendicular to the floor;
- at least one second movement element (5) that is connected with the edge of the feet (3) which is close to the floor, is suitable to move on the ground or rail, enables the system to be moved on the ground or rail so as to move the material to be used on the work area from one location to another;
- at least one movement unit (6) to which the lifting unit (2), the first movement elements (4) and/or the second movement elements (5) are connected, provides the energy required for the movement of the lifting unit (2), first movement elements (4) and the second movement elements (5);
- at least one control unit (7) that is positioned on the body (1) and connected with the movement unit (6), determines the information of the distance between said body (1) and/or said material and the ground and the distance information of said system to

be advanced on the ground or rail, enables the movement of the lifting unit (2), the first movement elements (3) and the second movement elements (5) to be initiated or stopped in accordance with the determined distance information.

2. The underground crane system according to claim 1, **characterized in that**; said body (1) has a square form.

3. The underground crane system according to claim 1, **characterized in that**; said lifting unit (2) is in the structure of a crane.

4. The underground crane system according to claim 1, **characterized in that**; said first movement elements (4) are hydraulic pistons.

5. The underground crane system according to claim 1, **characterized in that**; said second movement elements (5) are in wheel or track structure.

6. The underground crane system according to claim 1, **characterized in that**; said movement unit (6) comprises at least one first drive element that provides the energy required for the operation of said lifting unit (2), said first movement elements (4) and/or said second movement elements (5), is preferably an internal combustion diesel engine.

7. The underground crane system according to claim 1, **characterized in that;** said movement unit (6) comprises at least one pressure element that is connected with said first drive element, provides to obtain pressure force for moving said lifting unit (2), said first movement elements (4) and/or said second movement elements (5), enables a fluid material, preferably oil, to be sent to said lifting unit (2), said first movement elements (4) and/or said second movement elements (5), is a hydraulic pump.

8. The underground crane system according to claim 1, **characterized in that**; said control unit (7) comprises at least one input element (7a) that receives movement information entered by the user, is preferably a touch screen.

9. The underground crane system according to claim 1, **characterized in comprising** at least one detection element (8), preferably an angle sensor, which is connected with said control unit (7) and enables the detection of recesses, protrusions, slopes and level difference values on the ground and their transmission to said control unit (7).

10. The underground crane system according any of the claims 1 or 9, **characterized in that**; said control unit (7) comprises at least one control element that is preferably a programmable logic control, controls the operation of said lifting unit (2), said first movement elements (4) and /or said second movement elements (5) in accordance with the information and/or values received from said input element (7a) and/or said detection element (8).

11. The underground crane system according to claim 1, **characterized in comprising** at least one storage element (9) that is located on said body (1), is connected with said pressure element and enables said fluid material that provides to obtain pressure force to be stored.

12. The underground crane system according to claim 1, **characterized in comprising** at least one cooling element (10) that is located on said body (1) and connected with said storage element (9) and/or said pressure element, ensures cooling of said fluid material.

13. The underground crane system according to claim 1, **characterized in comprising** at least one fuel storage element (11) that is located on said body (1), is connected with said first drive element and stores the fuel required for the operation of said first drive element.

14. The underground crane system according to claim 1, **characterized in comprising** at least one second drive element (12) which is located on said body (1) and is a generator that enables electricity generation.

15. The underground crane system according to claim 1, **characterized in comprising** at least one protection element (13) that is located on said body (1), is an electrical panel that provides the positioning and protection of cables and/or electrical elements that provide electrical energy and signal transmission and protection from external factors.

16. The underground crane system according to claim 1, **characterized in comprising** at least one warning element (14), preferably a signboard, lamp and/or loudspeaker, that provides visual and/or auditory warning of the surrounding users during the operation of said system.

17. The underground crane system according to claim 1, **characterized in comprising** at least one climbing element (15), preferably a telescopic ladder, which is connected with said body (1) and helps the user to climb onto said body (1) from the ground and return to the ground.

18. The underground crane system according to claim 1, **characterized in comprising** at least one safety element (16) which is positioned along the edges of said body (1) in such a way

that it extends perpendicular to the floor and which is in the form of a guardrail on said body (1) that prevents the user from falling.

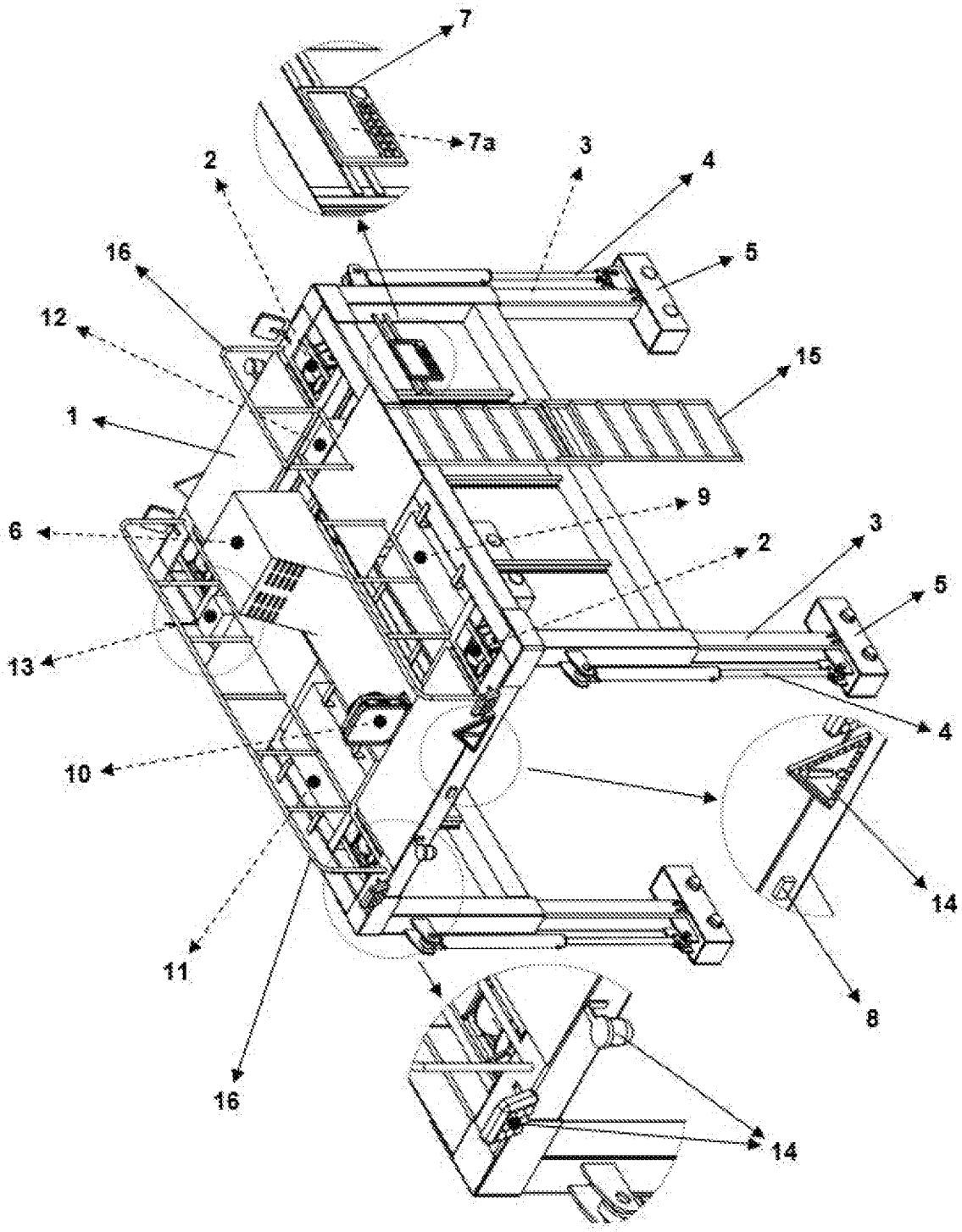

Figure 1

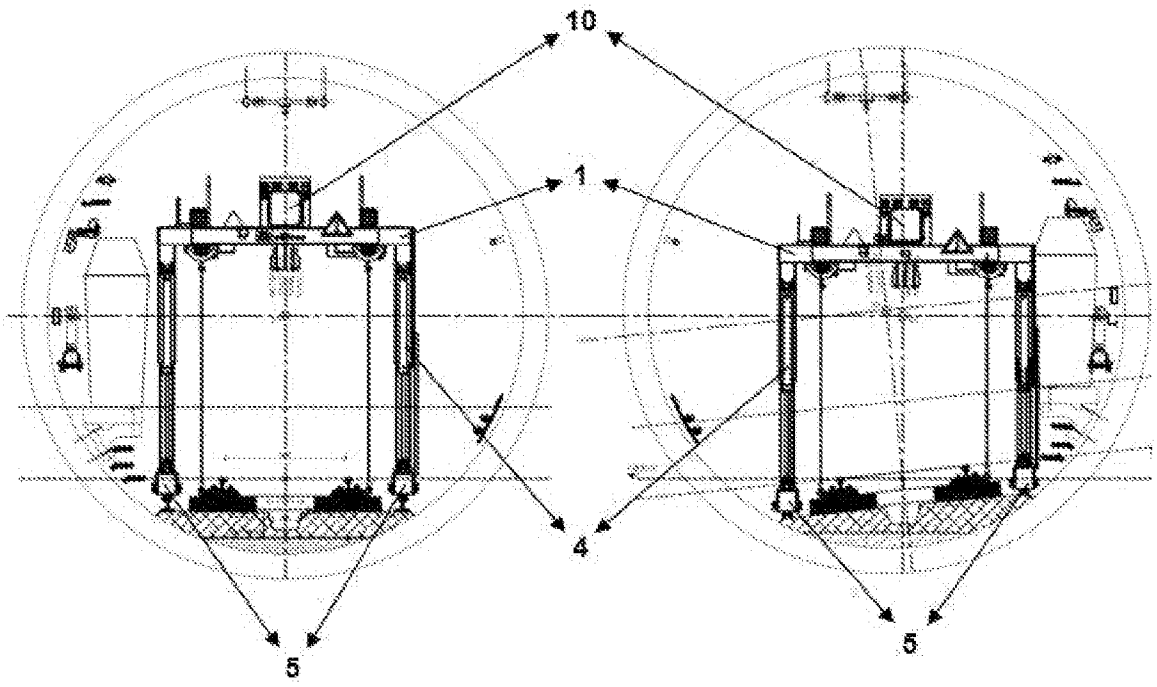

Figure 2

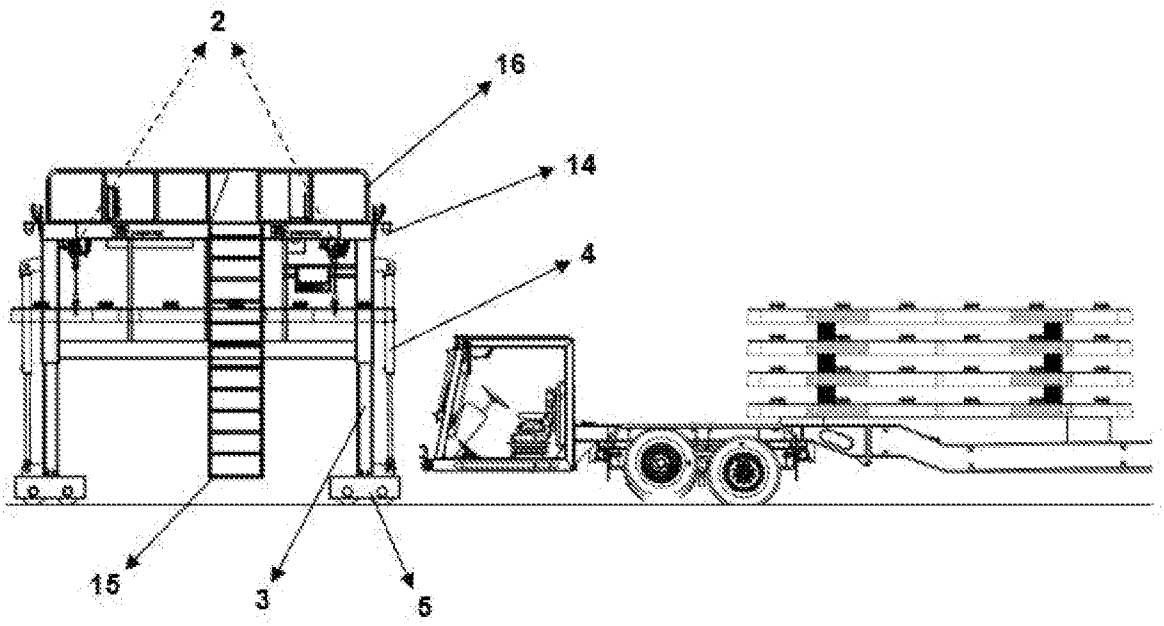

Figure 3