H. LEPAK.

GRAIN TREATING MACHINE.

APPLICATION FILED FEB. 6, 1920.

1,392,649.

Patented Oct. 4, 1921.

3 SHEETS—SHEET 1.

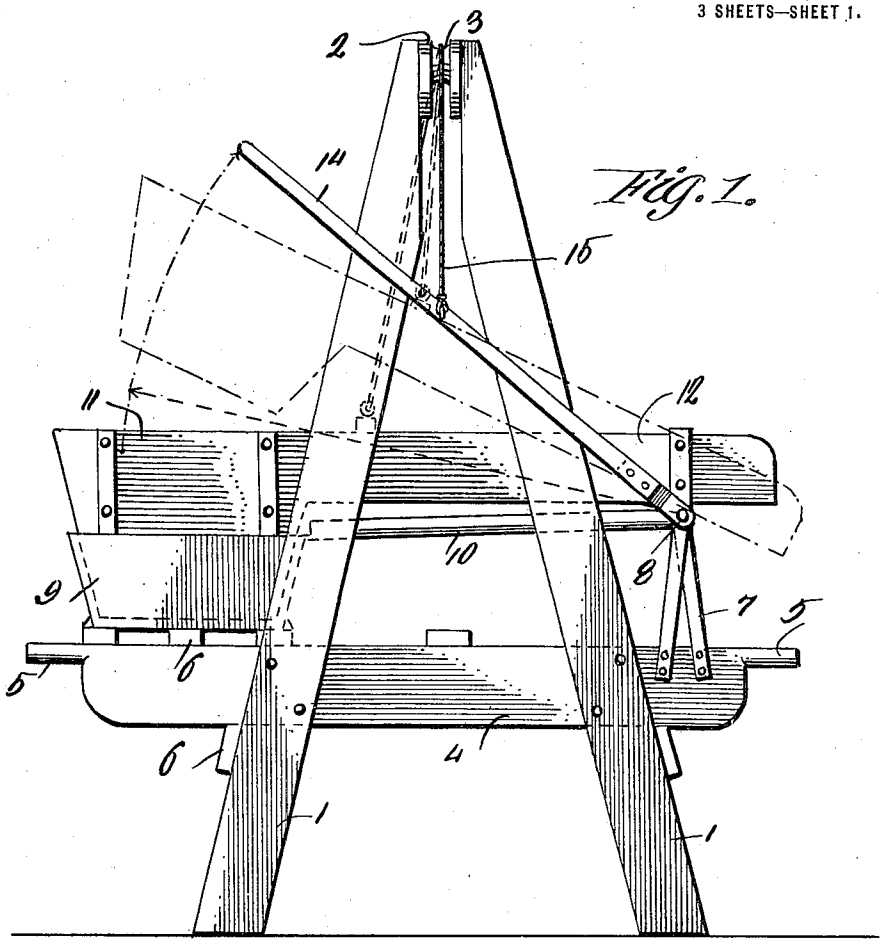

Fig. 1.

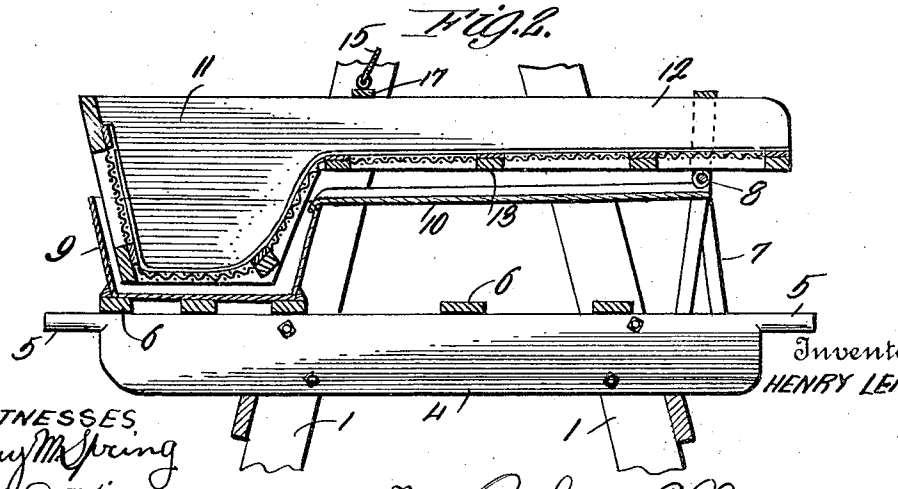

Fig. 2.

WITNESSES.

Guy M. Spring

U. B. Hillyard.

Inventor

HENRY LEPAK

By Richard B. Owen

Attorney

H. LEPAK.

GRAIN TREATING MACHINE.

APPLICATION FILED FEB. 6, 1920.

1,392,649. Patented Oct. 4, 1921.

3 SHEETS—SHEET 2.

Fig. 3.

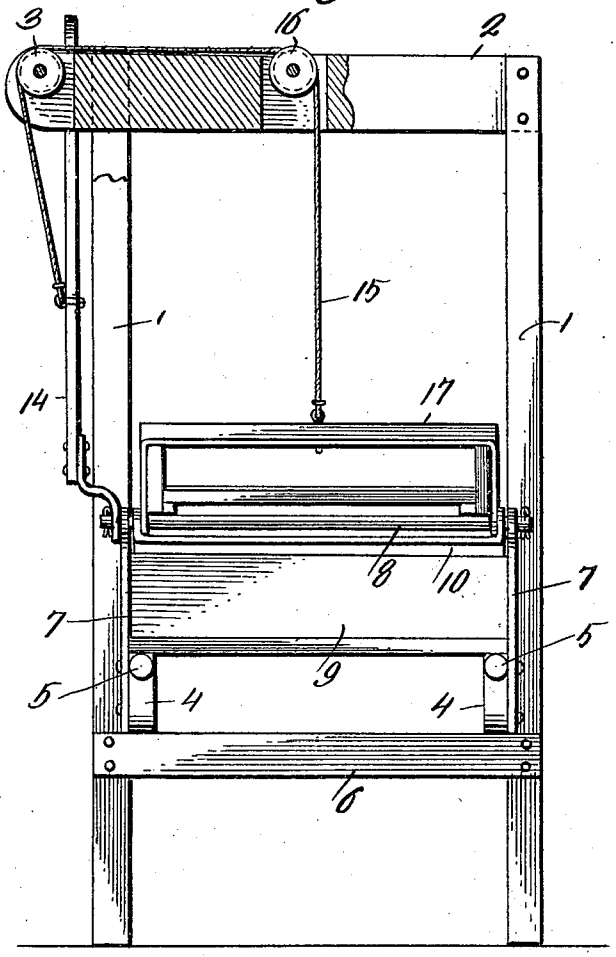

WITNESSES

Guy M. Spring

C. B. Hillyard.

Inventor

HENRY LEPAK

By Richard B. Owen

Attorney

H. LEPAK.

GRAIN TREATING MACHINE.

APPLICATION FILED FEB. 6, 1920.

1,392,649.

Patented Oct. 4, 1921.

3 SHEETS—SHEET 3.

Fig. 4.

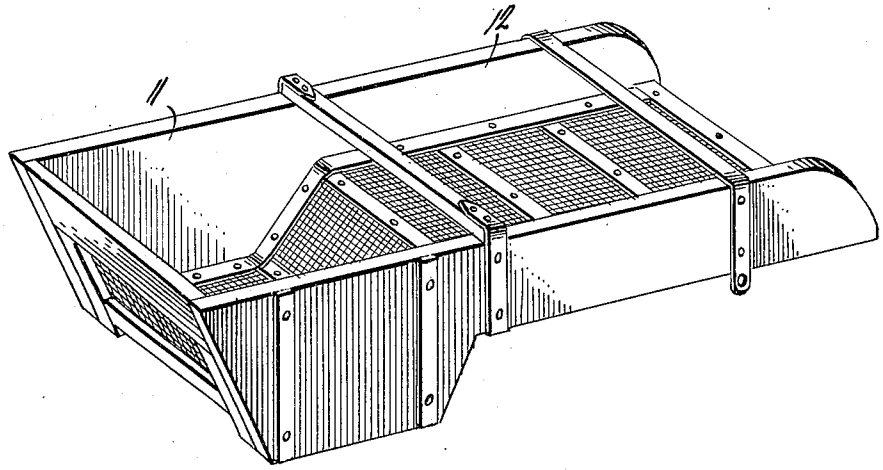

Fig. 5.

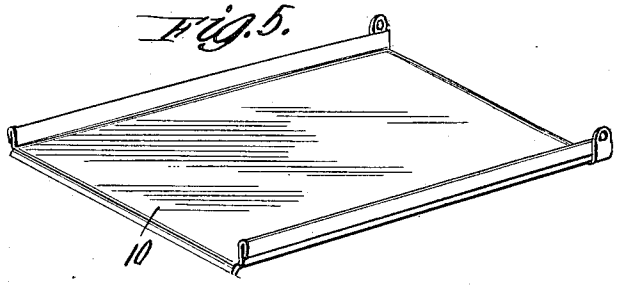

Fig. 6.

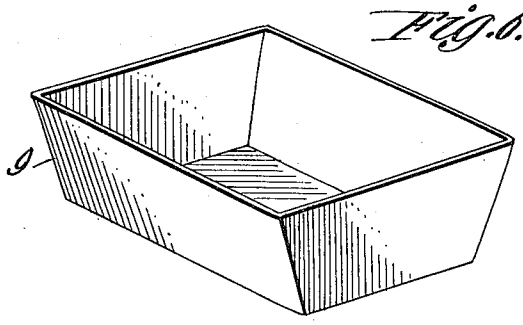

WITNESSES

Guy M. Spring

U. B. Hillyard.

Inventor

HENRY LEPAK

By Richard B. Owen

Attorney

UNITED STATES PATENT OFFICE.

HENRY LEPAK, OF MINNEAPOLIS, MINNESOTA.

GRAIN-TREATING MACHINE.

1,392,649. Specification of Letters Patent. Patented Oct. 4, 1921.

Application filed February 6, 1920. Serial No. 356,724.

To all whom it may concern:

Be it known that I, HENRY LEPAK, a citizen of the United States, residing at Minneapolis, in the county of Hennepin and State of Minnesota, have invented certain new and useful Improvements in Grain-Treating Machines, of which the following is a specification.

Grain stored in damp places or while containing moisture, deteriorates from many causes, smut being the principal disease. The present invention provides a machine which enables the grain to be readily and successfully treated to remedy the trouble.

The drawings illustrate a preferred embodiment of my invention. However, it is to be understood that in adapting the same to meet various conditions, various changes in the form, proportions and minor details of construction may be resorted to without departing from the nature of the invention as claimed hereinafter.

Referring to the drawings hereto attached:—

Figure 1 is a side view of a machine embodying the invention, the dotted lines indicating an adjusted position of the type which receives the grain to be treated,

Fig. 2 is a vertical longitudinal section of a machine, the upper and lower portions of the supporting frame work being broken away,

Fig. 3 is a rear end view, a portion of the upper cross beam being broken away to show more clearly the guide pulleys for the operating cord,

Fig. 4 is a detail perspective view of the dipper,

Fig. 5 is a detail perspective view of the return plate,

Fig. 6 is a detail perspective view of the pan.

Corresponding and like parts are referred to in the following description and indicated in the several views of the drawings by like reference characters.

The machine embodies in its organization, a supporting frame work, a pan for containing the solution, a dipper for receiving the grain to be treated and operating mechanism for actuating the dipper whereby the grain may be lifted from the treating bath and discharged.

The frame work comprises side supports, longitudinal bars and connected cross members. The side supports embody bars 1 which are upwardly converged and have their upper ends secured to a cross piece 2, the latter projecting at one end beyond a side support as indicated most clearly in Fig. 3, to receive a guide pulley 3. Longitudinal bars 4 connect the members of the respective side supports and terminate in handles 5. Suitable cross pieces 6 connect the longitudinal bars 4 and in conjunction with the cross piece 2 brace and strengthen the frame work. Standards 7 are secured to corresponding end portions of the longitudinal bars 4 and support a transverse rod 8.

A pan 9 is supported upon corresponding end portions of the longitudinal bars 4 and is adapted to receive the solution for treating the grain. The pan 9 may be of any construction and is placed upon certain cross pieces 6. A plate 10 is disposed at one side of the pan 9 and is supported at one end upon a side of the pan. The plate 10 is supported at its opposite end by means of the transverse rod 8. It is to be understood that the plate 10 may be of any construction and supported in any convenient way. The plate 10 is provided at its longitudinal ends with upwardly extended flanges to prevent lateral escape of the solution received upon the plate and conducted thereby back to the pan 9. The plate 10 inclined slightly to the horizontal being lowest at the end adjacent the pan 9 and highest at the end distant therefrom. As a result, drippings received upon the plate 10 are conducted thereby, back to the pan 9.

A dipper like structure is disposed above the pan 9 and return plate 10 and comprises a receptacle 11 and an extension 12. The receptacle 11 is of a size to be received within the pan 9 and is adapted to contain the grain to be treated. The extension 12 is disposed above the plate 10 and projects some distance in the rear thereof so as to discharge the grain into a suitable receiver. The receptacle 11 and the extension 12 are closed at opposite sides and the bottom of each is of screen formation whereby to retain the grain but provide an escape for the solution. The bottom of the dipper may be of any suitable screen material generally employed in the art of milling and said material may be suitably reinforced and braced by cross pieces 13. The inclosing side members are also to receive the screen material which rests thereon. The dipper is mounted so that the part 11 thereof may be received

from or lowered into the pan 9. In the preferred construction, the dipper is preferably supported at its delivery end upon the transverse rod 8, the parts being of such relative arrangement that when the dipper is lowered the part 11 enters the pan 9. When the dipper is elevated it assumes an inclined position and when fully elevated the grain contained in the receptacle 11 will pass therefrom onto the extension 12 and discharge therefrom by reason of the inclination. Any suitable means may be provided for raising and lowering the dipper and as shown an operating lever 14 is mounted upon an end portion of the transverse rod 8 and a cord or like part 15 is connected at one end thereto and passes over the guide pulley 3 and a like guide pulley 16 disposed centrally of the cross piece 2 and has its opposite end connected to a cross piece 17 applied to the dipper. When the free end of the lever 14 is elevated, the dipper is at its lowest position, with the lower portion of the receptacle 11 immersed in the solution contained in the pan 9. When the front end of the lever 14 is depressed, the dipper is elevated so as to discharge the grain after the same has been subjected to the solution or bath contained in the pan 9.

In the operation of the machine, the grain to be treated is placed in the receptacle 11 and the pan 9 is supplied with a solution according to the nature of the disease to be treated.

Usually a solution of formaldehyde is supplied to the pan 9 and it is to be understood that the grain to be treated is supplied to the receptacle portion 11 of the dipper in such quantity as to insure its complete immersion in the solution. After the grain has been treated for the requisite length of time it is discharged from the dipper by manipulation of the lever 14 in the manner herein stated. This effects a tilting of the dipper to such an angle as to cause the grain to pass from the receptacle 11 onto the extension 12 and over the latter into a suitable vessel placed for its reception. When the dipper is elevated, the solution drained from the grain contained in the receptacle 11 passes back into the pan 9 and any drippings discharged from the grain in its passage over the screen bottom of the extension 12 is received on the plate 10 and returned thereby to the pan 9 as will be readily understood.

Having thus fully described my invention what I claim as new and desire to secure by Letters Patent, is:—

1. A grain treating apparatus comprising a supporting frame, a solution receptacle and drain plate discharging therein arranged within the frame, and dipper means of perforated material disposed longitudinally over and above the said receptacle and plate and mounted for movement upwardly and laterally of the frame for discharge purposes, said means embodying a receptacle movable to dip into said solution receptacle and an extension forming a discharge spout for the dipper receptacle and perforated to drain upon said plate substantially throughout it length.

2. A grain treating apparatus comprising a supporting frame work, a solution receptacle supported on one side of the frame, a shaft supported on the opposite side of the frame and above the level of the said receptacle, a drain plate spaced between the shaft and receptacle and discharging into the latter, a dipper of perforated material arranged lengthwise over and along the said receptacle and plate and adapted to drain upon the latter substantially throughout its length, said dipper embodying an extension movable crosswise of the said shaft when the dipper is elevated and a receptacle at the other end of the extension movable to dip into said solution receptacle when the dipper is lowered, and means for raising and lowering the said dipper.

3. A grain treating apparatus comprising a longitudinally extended drain plate, a solution receptacle connected therewith into which said plate discharges and a dipper formed of perforated material having a receptacle of limited capacity movable to dip into said solution receptacle and also having a longitudinal extension disposed above and along said drain plate and adapted to drain upon said pan substantially throughout its length.

In testimony whereof I affix my signature in presence of two witnesses.

HENRY LEPAK.

Witnesses:
H. E. Cobb,
M. L. Colburn.