Nov. 15, 1955 M. BERTHOLD 2,723,590

APPARATUS FOR THE SPECTROSCOPIC DETERMINATION OF THE ALLOY CONSTITUENTS OF METALLIC MATERIALS

Filed Feb. 17, 1954

FIG. 1.

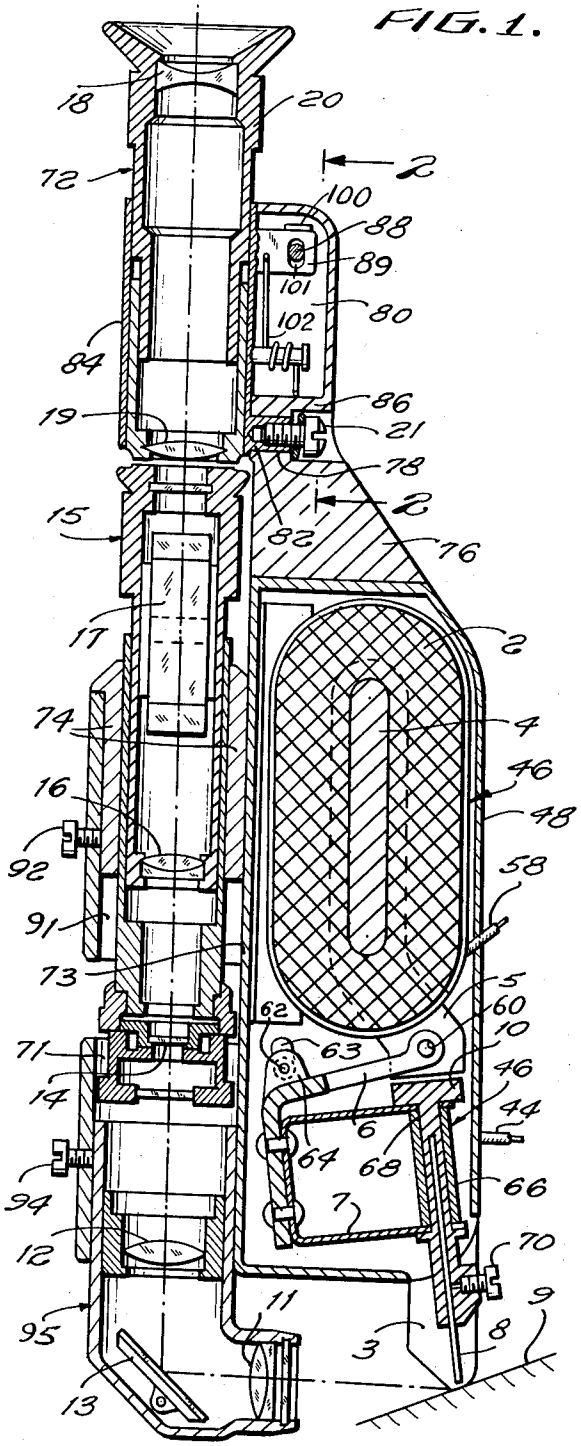

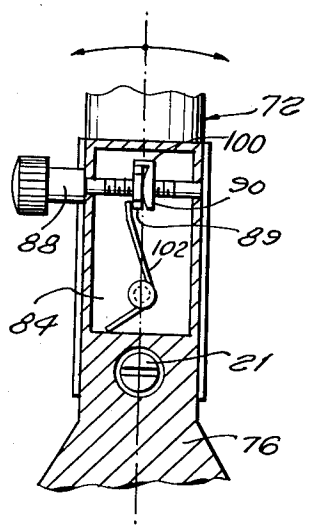

FIG. 2.

FIG. 3.

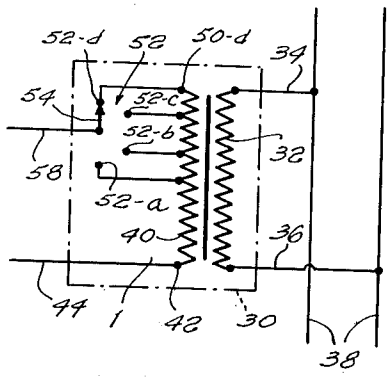

INVENTOR.
MANFRED BERTHOLD
BY

ATTORNEY

United States Patent Office 2,723,590 Patented Nov. 15, 1955

2,723,590

APPARATUS FOR THE SPECTROSCOPIC DETERMINATION OF THE ALLOY CONSTITUENTS OF METALLIC MATERIALS

Manfred Berthold, Karl-Marx-Stadt, Germany, assignor to Veb Fahrradwerk Elite-Diamant, Karl-Marx-Stadt, Germany

Application February 17, 1954, Serial No. 410,980

6 Claims. (Cl. 88—14)

This invention relates to measuring instruments, and more particularly to an apparatus for the spectroscopic determination of the alloy constituents of metallic materials by direct observation of the emission spectra of the elements of the material.

An object of the present invention is to provide an apparatus which permits a fast spectroscopic determination of the alloy constituents of metallic materials.

Another object of the present invention is to provide an apparatus for the spectroscopic determination of the alloy constituents of metallic materials wherein the electrode used for causing sparks may be made of a material other than that to be analyzed, so that it is unnecessary to damage the material to be analyzed for preparing an electrode to be made therefrom as is necessary for certain hitherto customary apparatus when they are used for the determination of the alloy constituents of rare or unknown materials.

A further object of the invention is to provide an apparatus for the spectroscopic determination of the alloy constituents of metallic materials which is of compact shape and may be readily transported from place to place where it is needed and may be used in any desired position.

Another object of the invention is to provide an apparatus for the spectroscopic determination of the alloy constituents of metallic materials which does not require special safety measures for the protection of the operator.

A further object of the invention is to provide an apparatus for the spectroscopic determination of the alloy constituents of metallic materials which does not require an additional optical device for a second (comparative) spectrum.

Another object of the invention is to provide an apparatus for the spectroscopic determination of the alloy constituents of metallic materials which may be manufactured at low costs.

A further object of the invention is to improve on the art of apparatus for the spectroscopic determination of the alloy constituents of metallic materials as now customarily made.

Other objects and structural details of the invention will be apparent from the following description when read in conjunction with the accompanying drawings forming part of this specification, wherein:

Fig. 1 is a vertical sectional view of an apparatus according to the invention,

Fig. 2 is a sectional view taken on line II—II of Fig. 1, and

Fig. 3 is a diagrammatical illustration of a transformer used with the apparatus and of the electrical connections of said transformer.

Referring now to Fig. 1, **46** generally indicates a spark generator, **15** generally indicates a spectroscope and **72** generally indicates a telescope of the apparatus according to the invention.

The metallic casing **48** of the spark generator **46** contains a coil **2** which in turn surrounds an iron core **4**.

A metallic contact support **3** for engagement with the material **9** to be analyzed is arranged at the lower end of said casing **48** and projects therefrom. Current may be supplied to said contact support **3** by a line **44** electrically connected with the casing **48**. The coil **2** may receive current through a line **58** being connected with the beginning of said coil **2** and passing through a bore of the casing **48**.

As best shown in Fig. 3, the line **44** is connected to a terminal **42** of the secondary winding **40** of a transformer **30** and the line **58** is connected to a terminal **56** of an adjustable switch **52** having a movable contact member **54** for selective engagement with a stationary terminal of a series of stationary terminals **52**–*a*, **52**–*b*, **52**–*c*, **52**–*d*, each of which being connected with a tapping **50**–*a*, **50**–*b*, **50**–*c*, **50**–*d* of the secondary winding **40** of the transformer **30**.

The primary winding **32** of the transformer **30** is connected by lines **34**, **36** to a network **38** having a voltage of 220 volts, for example. A low alternating voltage, for example a voltage of 24 volts, is induced in the secondary winding **40** of the transformer **30**.

Thus, the low voltage supplied to the apparatus may be readily selected between predetermined values by a suitable adjustment of the movable contact member **54**.

The end of the coil **2** is electrically connected with the iron core **4** which in turn is in electrical conductive connection with a pair of pole shoes **5** (only one being shown). A metallic bracket **6** carrying a U-shaped metallic spring **7** is swingably mounted on a pin **60** secured to the pole shoes **5**. The bracket **6** may be held in a predetermined position by means of a set screw **62** passing through a slot **63** of the casing **48** and screwed into a lug **64** of insulating material secured to the bracket **6**. The bore of a metallic sleeve **66** engaged with the spring **7** is in register with a pair of holes of said spring **7**. The stem **68** of a metallic armature **10** inserted into the sleeve **66** projects downwardly. A portion of said stem **68** has a center bore for receiving a pin **8** made of tungsten. Said pin **8** acting as an electrode is detachably mounted in the center bore of said stem **68** by means of a set screw **70**.

It will be readily understood that the electrode **8** is in electric connection with the line **58** through the stem **68**, the sleeve **66**, the spring **7**, the bracket **6**, the pole shoes **5**, the core **4** and the coil **2**.

The contact support **3** is in electric connection with the line **44** through the casing **48**.

When the apparatus is placed on the material **9** to be analyzed by bringing the contact support **3** and the electrode **8** into engagement with said material **9**, the circuit is closed through the contact support **3**, the material **9** and the electrode **8**. Now, when current is supplied to the circuit, the electromagnetic device **2**, **4**, **5** is energized so that the armature **10** is attracted by the pole shoe **5**. Thus, the electrode **8** is removed from the surface of the material **9**, so that the circuit is interrupted and a spark is formed between the electrode **8** and the material **9**. When, during continued movement of the electrode **8** the spark is extinguished, the electromagnetic device **2**, **4**, **5** is deenergized, so that the electrode **8** is returned into contact with the material **9** by the action of the spring **7**. Now the circuit is closed again and above described operations are repeated until the supply of current is stopped. The strength of the spring **7** and the mass of the armature are chosen in such a way that a spark occurs during each half period of the alternating current.

As best shown in Fig. 1, the casing **48** has a lower extension **71** and an upper extension **91**, both of substantially annular cross-section at its left hand side. A light deflecting elbow **95** containing a mirror **13** and two achromatic lenses **11** and **12** is inserted into the space

formed between said lower extension 71 and the wall 73 of the casing 48. Said elbow 95 is held in its position by a set screw 94. The spectroscope 15 being inserted into the space between the upper extension 91 and the wall 73 of the casing 48 is held in its position by means of a sleeve 74 and a set screw 92.

The sparks generated between the electrode 8 and the material 9 are projected by an achromatic lens 11, a mirror 13 and another achromatic lens 12 to the slit 14 of the spectroscope 15.

The distance between the sparks and the achromatic lens 11 may be adjusted by an angular adjustment of the bracket 6 around the pivot 60 by means of the set screw 62.

A block 76 having a bore 78 and a cavity 80 is secured to the top surface of the casing 48 in any suitable manner, for example by screws (not shown). A stud-like extension 82 of a mounting 84 is rotatably arranged in the bore 78 of the block 76. A cylindrical spring 86 arranged between the surface of the stud 82 and the head of a screw 21 screwed into a threaded bore of said stud 82 tends to urge said mounting 84 towards the block 76. The telescope 72 is inserted into the bore of said mounting 84. Thus, the telescope 72 may be laterally displaced relative to the spectroscope 15 by a swinging movement around the axis of the stud 82.

The telescope 72 may be set in a predetermined angular position relative to the spectroscope 15 by means of a set screw 88. Said set screw 88 rotatably mounted in the block 76 is threaded into a nut 90 having an extension 100 engaged with the upper edge of a lug 89 rigid with and projecting from the swingable mounting 84 of the telescope. The set screw 88 passes through an elongated slot 101 of the lug 89 so as to give the latter freedom of swinging movements about the axis of the stud 82. A spring 102 tends to urge the lug 89 against the nut 90. The extension 100 of the nut 90 engaged with the lug 89 prevents the nut 90 from rotation when the set screw 88 is rotated.

The person carrying out a test may observe the slit 14 of the spectroscope 15 through the achromatic lenses 18 and 19 of the telescope 72 and the dispersion prism 17 and the achromatic magnifying lens 16 of the spectroscope 15. The rotatable eye-piece sleeve 20 of the telescope 72 may be used for a sharp focusing of the object. An angular displacement of the telescope 72 relative to the spectroscope 15 may be obtained by rotation of the set screw 88 causing an axial displacement of the nut 90 in abutting engagement with the lug 89 whereby the telescope 72 is swung around the axis of the stud 82.

Instead of the swingable arrangement of the telescope 72 it would also be possible to use a stationary telescope, when means are provided for swinging the dispersion prism of the spectroscope and for setting same in different positions.

Furthermore the telescope shown in the drawings could be replaced by a telescope having cross hairs and means for measuring the distances of the wave lengths.

As will be readily understood from above, the spark generator 46, the spectroscope 15 and the telescope 72 connected with each other form a unit which may be readily carried around from place to place wherever it is needed.

The arrangement of the contact support 3, instead of a table as customary in most of the hitherto known devices, permits the examination of work pieces in any position they may occupy. The examining person merely places the apparatus according to the invention onto the material to be analyzed and determines the kind of alloy constituents by means of the characteristic position of the observed spectral line.

With some experience it is also possible to estimate with sufficient exactness the percentage of the contents of a certain kind of an element by observation of the brightness of the spectral lines.

Owing to the comparatively simple construction of the apparatus the latter may be manufactured at low costs. The low price and the comparatively small dimensions of the apparatus make same especially useful for hardening shops and stores of materials.

The apparatus according to the invention permits a fast determination of the alloy constituents of a material. For example, the following alloy constituents of a steel product with a lower limit of detection have been determined by means of an apparatus according to the invention within a few seconds:

	Per cent
Chromium	.2
Manganese	.15
Molybdenum	.1
Nickel	1
Vanadium	.1
Cobalt	2
Titanium	.3

As the apparatus is operated at a low voltage, preferably of 24 volts, special safety measures become unnecessary.

I have described a preferred embodiment of my invention, but it is understood that this disclosure is for the purpose of illustration and that various omissions or changes in shape, proportion and arrangement of parts, as well as the substitution of equivalent elements for those, herein shown and described, may be made without departing from the spirit and scope of the invention as set forth in the appended claims.

What I claim is:

1. An apparatus for the spectroscopic determination of the alloy constituents of metallic materials, comprising in combination: a spark generator including a casing, a spectroscope, a telescope, said spectroscope and said telescope being arranged in operative relationship to each other and being mounted on said casing of said spark generator whereby a unit is formed, and a contact support arranged on said casing of the spark generator for engagement with the material to be tested.

2. In an apparatus as claimed in claim 1, said telescope being movably mounted on said casing of the spark generator, and setting means associated with said telescope for holding same in a predetermined position relative to said spectroscope.

3. In an apparatus as claimed in claim 1, a coil in said casing of the spark generator, a core surrounded by said coil, a pair of pole shoes connected with said core, guiding means mounted on said pole shoes, an armature reciprocably arranged in said guiding means for cooperation with said pole shoes, and an electrode attached to said armature, said electrode projecting from said casing and being in electric connection with said armature, said guiding means, said pole shoes, said core and said coil.

4. In an apparatus as claimed in claim 1, a coil in said casing of the spark generator, a core surrounded by said coil, a pair of pole shoes connected with said core, guiding means adjustably mounted on said pole shoes, setting means associated with said guiding means for holding same in a predetermined position, an armature reciprocably arranged in said guiding means for cooperation with said pole shoes, and an electrode attached to said armature, said electrode projecting from said casing and being in electric connection with said armature, said guiding means, said pole shoes, said core and said coil.

5. In an apparatus as claimed in claim 1, a coil in said casing of the spark generator, a core surrounded by said coil, a pair of pole shoes connected with said core, guiding means mounted on said pole shoes, an armature reciprocably arranged in said guiding means for cooperation with said pole shoes, an electrode attached to said armature, said electrode projecting from said casing and being in electric connection with said armature, said guiding means, said pole shoes, said core and said coil, and an

electric low voltage source, one terminal of said electric source being connected with said contact support, the other terminal of said electric source being connected with said coil.

6. In an apparatus as claimed in claim 1, a coil in said casing of the spark generator, a core surrounded by said coil, a pair of pole shoes connected with said core, guiding means mounted on said pole shoes, an armature reciprocably arranged in said guiding means for cooperation with said pole shoes, and an electrode attached to said armature, said electrode projecting from said casing and being made of tungsten, and said electrode being in electric connection with said armature, said guiding means, said pole shoes, said core and said coil.

References Cited in the file of this patent

UNITED STATES PATENTS

1,350,734	Overlin	Aug. 24, 1920
1,810,669	Loeb	June 16, 1931
2,094,096	Cutting	Sept. 28, 1937
2,100,977	Pettersson	Nov. 30, 1937
2,456,116	Enns	Dec. 14, 1948

OTHER REFERENCES

Instruments for June 1933, vol. 6, page 125.