United States Patent [19]

Swart

[11] **3,870,260**

[45] **Mar. 11, 1975**

[54] **SHIFTABLE CABLE SUPPORT**

[75] Inventor: **Gary M. Swart,** Lincroft, N.J.

[73] Assignee: **Estey Corporation,** Red Bank, N.J.

[22] Filed: **Oct. 19, 1973**

[21] Appl. No.: **399,707**

[52] **U.S. Cl.** ..... **248/49,** 174/68 C, 248/52, 248/55

[51] **Int. Cl.** **F16l 3/02**

[58] **Field of Search** ..... 248/49, 51, 52, 55, 58, 248/62, 65, 289, 298, 53; 211/1.5; 312/198, 223, 201, 199; 174/68 C; 317/122; 214/16 B

[56] **References Cited**

UNITED STATES PATENTS

955,045	4/1910	Blair	248/53 X
1,189,018	6/1916	Turner	248/53
2,667,323	1/1954	Mason	248/298
3,075,732	1/1963	Lindenmeyer	248/49
3,298,644	1/1967	Sherburne	248/55
3,448,346	6/1969	Webb	317/122
3,575,298	4/1971	Ruoss	211/1.5
3,710,199	1/1973	Cignoni	317/122

FOREIGN PATENTS OR APPLICATIONS

174,976	4/1961	Sweden	248/55
938,381	9/1948	France	248/55
1,204,337	9/1970	Great Britain	211/1.5

Primary Examiner—Roy D. Frazier
Assistant Examiner—Rodney H. Bonck
Attorney, Agent, or Firm—James M. Heilman; Anthony J. Casella

[57] **ABSTRACT**

A supporting means for a plurality of electrical conductors having their ends secured to articles which are movable relative to each other. A metal channel houses the conductors and is coupled to each article by a sliding mounting. Each mounting includes three brackets and a plurality of plastic coverings, secured to the brackets, for making sliding contact with the outside surfaces of the channel.

8 Claims, 3 Drawing Figures

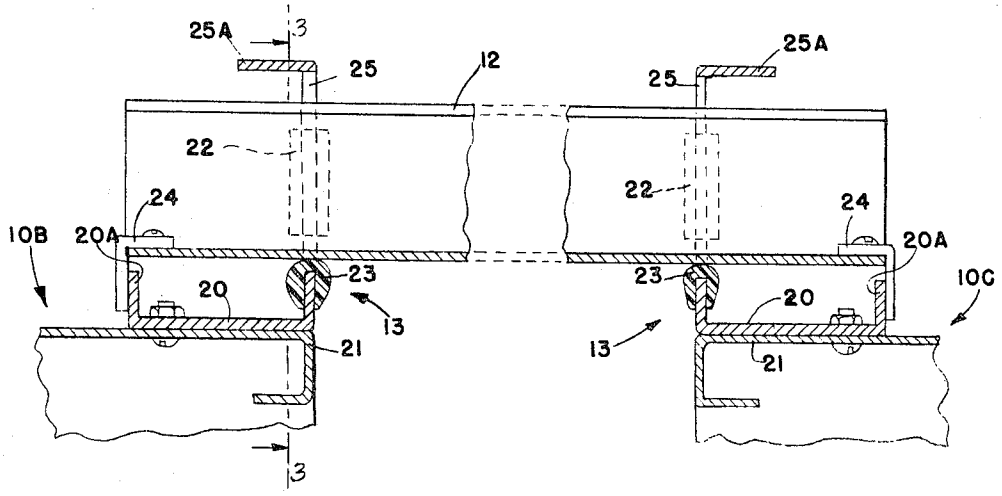

FIG. 1

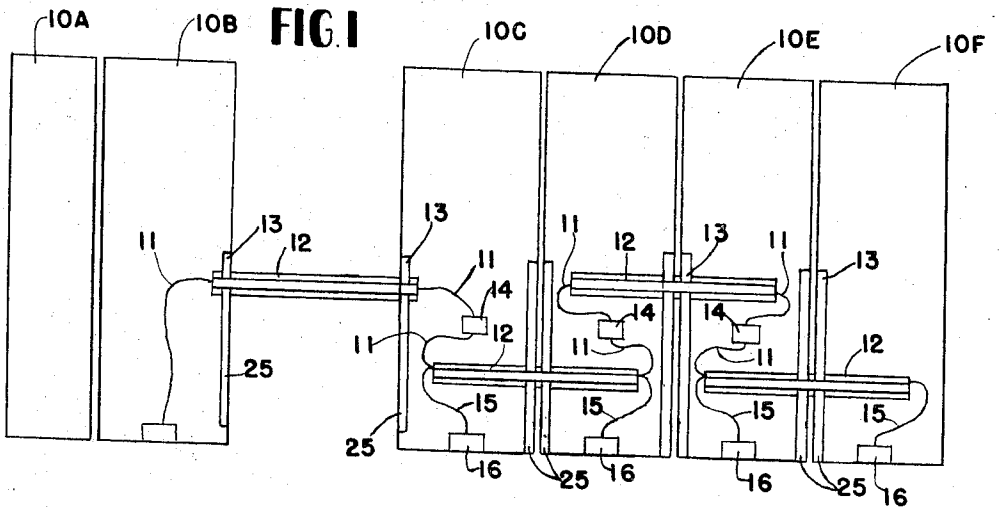

FIG. 2

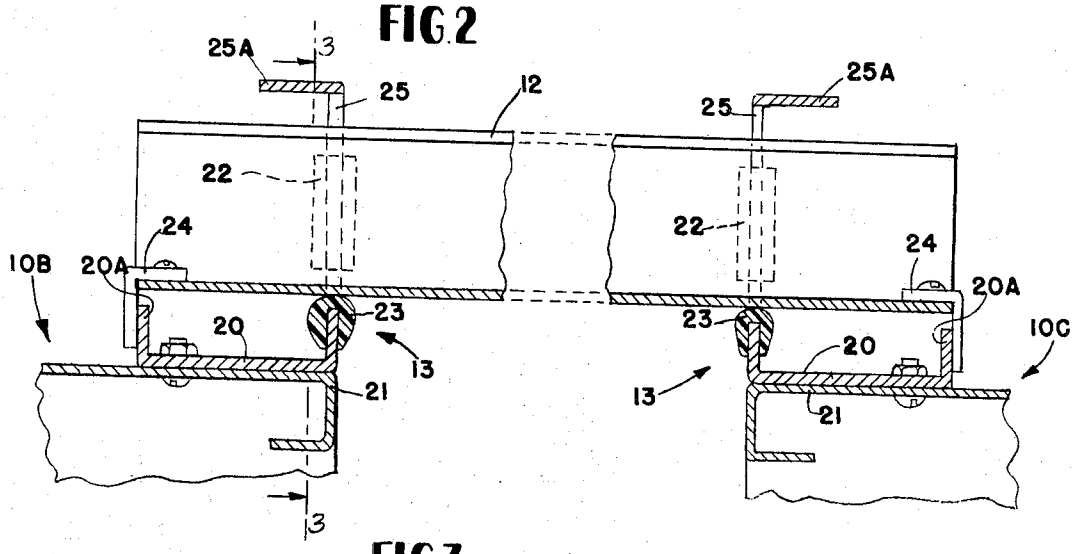

FIG. 3

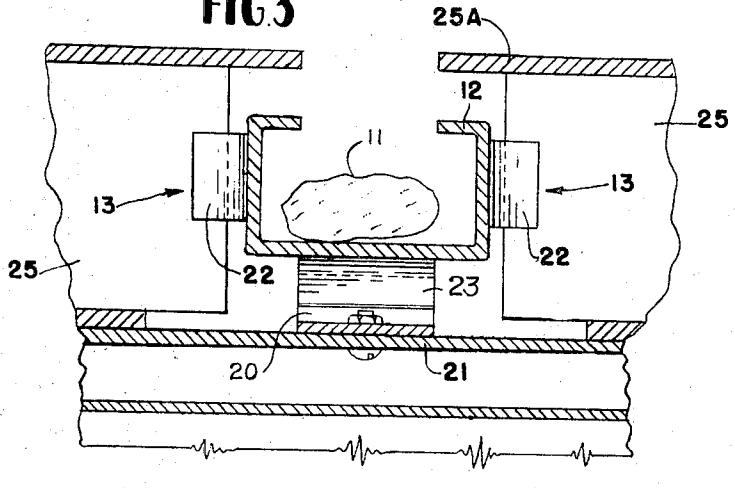

SHIFTABLE CABLE SUPPORT

BACKGROUND OF THE INVENTION

The supporting means described herein is designed to be used on the top of a series of storage stacks which are movable along a common track to provide access to persons who desire to inspect or remove material stored in the stacks. Such an array of storage stacks are well known.

In that arrangement, and in many other similar arrays, it is necessary to provide conductive wires between units to control their motion, the lighting, and other control components. An overhead support, using a metal channel for housing the wires, is well suited to the requirements since it protects the wires, is out of the way from people passing under it, and requires no power for its operation. The channel slides in brackets placed on top of the units and has been found superior in many ways to a freely draped cable or a cable supported in a resilient manner to be lifted above the units when they are brought together.

One feature of the invention is the electrical coupling of control units in the storage means while providing full mechanical protection of the wires and their connecting components.

Another feature of the invention is the method of joining stack units while preventing interference from personnel.

Still another feature of the invention is the resistance free mounting means which permits the channels to slide easily and without noise in their mounting means.

SUMMARY

The invention includes two mounting means, one on each article and a metal tube or channel for housing electrical conductors supported by the mounting means. The mounting means each include brackets and bearings arranged for sliding contact with the outside surface of the channel. A limit means is secured to each end of the channel to prevent its pulling away from the mounting and a bar is secured above the channel to prevent its lifting out of the mounting means.

Additional details of the invention will be disclosed in the following description, taken in connection with the accompanying drawings.

BRIEF DESCRIPTION OF THE FIGURES

FIG. 1 is a top view of the articles being connected by the cable. A plurality of shiftable supports are shown in plan view together with electrical junction boxes for conductor termination.

FIG. 2 is a cross sectional view of one of the supporting means.

FIG. 3 is a cross sectional view of the supporting means of FIG. 2, taken along line 3—3 of that figure.

DESCRIPTION OF THE PREFERRED EMBODIMENT

Referring now to the figures, six storage stacks 10 are shown in FIG. 1 with an aisle space between stacks 10B and 10C. All the stacks except 10A and 10F are shiftable on rails to provide aisle space between any two adjacent stacks by motive means under control of an operator. A first set of connecting conductors 11 between stacks are supported in metal channels 12 which slide in mounting means 13 provided at the upper edge of the stacks. These connecting conductors 11 are terminated at junction 14 where cross-connections and relays may be positioned. A second set of conductors 15 run from the junctions 14 to switching means 16 at the side edge of the stacks 10. These junctions 14 connect to push buttons on the front sides of the stacks and also to power motors housed in the bases of the stacks. Further details regarding the control circuit can be found in the above mentioned patent application.

Details of the channel mountings 13 are shown in FIGS. 2 and 3, where brackets 20 are secured to the top panel 21 of the stack. Brackets 20 are bolted to the top panel and a plastic cover 23 is slipped over the upper edge to form a bearing for the channel 12. The plastic cover may be made of a material such as polytetrafluoroethylene (including Teflon, trademark of DuPont & Co.), phenolic condensate resin (including Bakelite, trademark of Union Carbide Co.), nylon, or polyethylene which has a low coefficient of friction with metal. Similar plastic covers 22 are placed over the edges of side bars 25 to restrain the channel from side horizontal movement. Brackets 20 may be secured to the top panel 21 by bolts as shown in FIGS. 2 and 3 or they may be welded to insure a more permanent structure.

A limit means is added to the cable support to insure that the channel 12 will not pull out of one of the mountings. The limit means may take many forms, the one shown in FIG. 2 is simple and effective. Bracket 20 is made with a turned up portion 20A and an angle iron 24 is bolted to each end of the channel 12. When the stacks 10B and 10C are separated by the full amount to provide a wide aisle, both limit means will be in the position indicated in FIG. 2.

To insure that the channel 12 will not move above the position shown, a restraining bar 25 is mounted on the edge of the stacks with a slot for passage of the channel 12. The bar 25 is formed with a turned over portion 25A which effectively limits the upward motion of channel 12.

The embodiments of the invention in which an exclusive property or privilege is claimed, are defined as follows:

1. A cable support for positioning electrical conductors connected to articles which are movable with respect to each other comprising: a channel for housing the conductors; said channel including closed sides and a closed bottom and an open top for the insertion of said conductors; mounting means for the channel on each of the articles for slidably supporting the channel when either one of the articles is moved; said mounting means including bracket means secured to the articles and having an opening which is aligned with the open top of said channel permitting the insertion of conductors and a plurality of plastic bearing covers held by the bracket means and arranged for sliding contact with the channel sides and bottom.

2. A support according to claim 1 wherein a limit member is secured to each end of the channel to prevent the channel from disengagement with the mounting means.

3. A support according to claim 1 wherein said channel is made of metal.

4. A support according to claim 1 wherein the bearing covers are made of a phenolic condensate resin.

5. A support according to claim 1 wherein the bearing covers are made of nylon.

6. A support according to claim 1 wherein the bearing covers are made of polytetrafluoroethylene.

7. A support according to claim 1 wherein restraining means are mounted above the channel on each article for preventing the channel from detachment from the mounting means.

8. A support according to claim 1 wherein said mounting means is secured to the top surface of a storage means.

* * * * *