E. N. HUMPHREY.

SAFETY RAZOR.

APPLICATION FILED MAR. 11, 1913.

1,076,286. Patented Oct. 21, 1913.

Fig. 1.

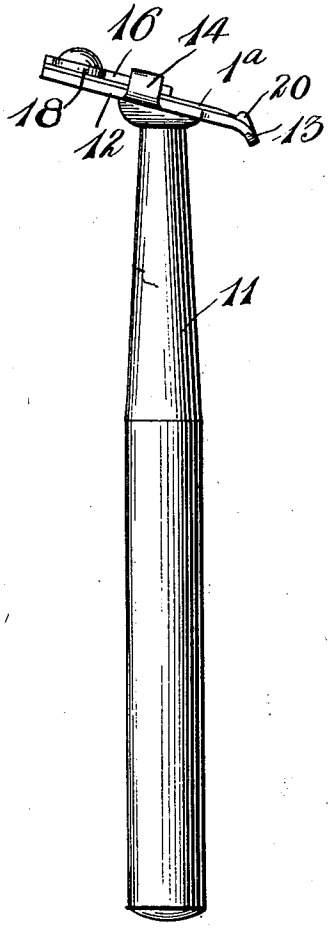

Fig. 2.

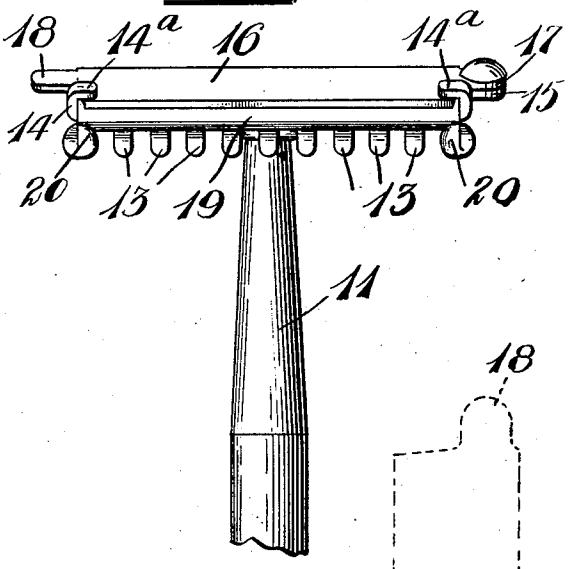

Fig. 3.

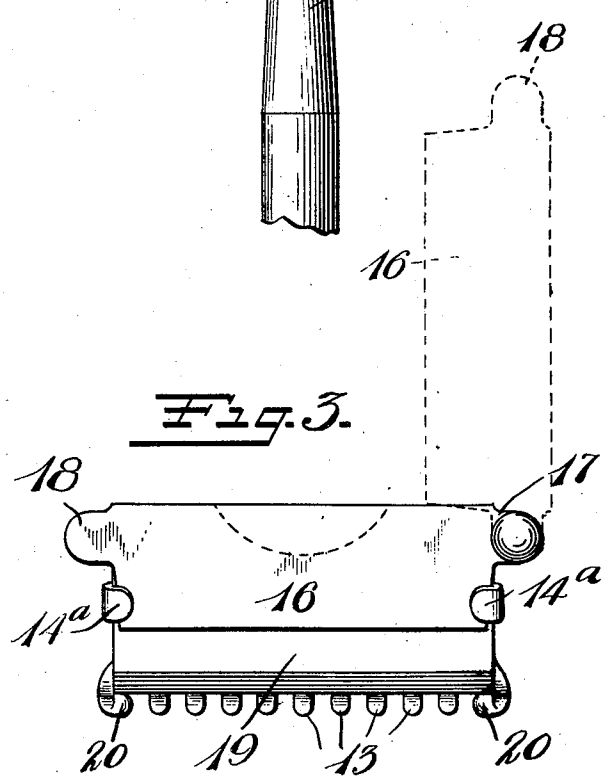

Witnesses:
Chas. A. Peard
Ida M. Hunziker

Inventor
E. N. Humphrey
By his Attorneys
Bartlett Bennett & McDaniel

UNITED STATES PATENT OFFICE.

ERNEST N. HUMPHREY, OF NEW BRITAIN, CONNECTICUT, ASSIGNOR TO THE TRAUT & HINE MANUFACTURING COMPANY, OF NEW BRITAIN, CONNECTICUT, A CORPORATION OF CONNECTICUT.

SAFETY-RAZOR.

1,076,286. Specification of Letters Patent. Patented Oct. 21, 1913.

Application filed March 11, 1913. Serial No. 753,491.

To all whom it may concern:

Be it known that I, ERNEST N. HUMPHREY, a citizen of the United States, residing at New Britain, Hartford county, State of Connecticut, have invented certain new and useful Improvements in Safety-Razors, of which the following is a full, clear, and exact description.

This invention relates to so-called "safety razors," and is designed to provide a simple and efficient structure of this character. An efficient blade-clamping means is provided which will afford ready access to the blade and razor parts when it is desired to remove the blade or cleanse the razor.

It is my aim to provide an effective structure of this character which readily lends itself to afford substantial economies in manufacture.

To this end my invention consists in the relative arrangement and combination of parts more fully described in the following specification, taken in connection with the accompanying drawings forming part thereof and illustrating preferable embodiments of the invention.

In these drawings: Figure 1 is a view in end elevation of the invention. Fig. 2 is a view in front elevation, on an enlarged scale, of the parts shown in Fig. 1. Fig. 3 is a top plan view of the parts shown in Fig. 2, the clamping member being shown in blade-released position in dotted lines.

Referring to the drawings by numerals, 11 designates the usual handle and 12 the blade-supporting plate rigidly secured thereto and inclining downwardly at an angle, this plate being suitably notched or recessed at its forward edge, as at 13, to provide the usual guard, and intermediate its forward and rear edges and at its sides, is provided with an integral upwardly and inwardly extending lug 14 whose inward extensions 14^a project from the upper face of the supporting plate. Adjacent its rear edge, the plate 12 is provided with a longitudinal offset 15 to which the offset end 17 of a clamping plate 16 is pivotally connected by any suitable means. This clamping plate 16 extends substantially the entire length of the supporting plate 12, and its free end is provided with a finger piece extension 18 projecting out beyond the edge of the plate 12. The offset 17 of this clamping plate is positioned adjacent its rear edge, as is the finger piece 18, and the body of the clamping plate is formed to extend in over the face of the supporting plate 12 to a point preferably beyond the inward extensions 14^a. The plate 16 is of spring material and also preferably pivoted to bring its edge in a plane slightly above the under faces of these extensions 14^a. The thickness of this clamping plate bears such relation to the distance between the under face of these inward extensions 14^a and the top face of a razor blade firmly seated on the plate 12 that when this clamping plate is swung inwardly from its upper edge, it will frictionally engage the abutment surfaces formed by the under faces of these lug extensions 14^a and will be frictionally held thereby in tight clamping engagement with the upper face of the razor blade. In order to make this engagement a secure one, I prefer to form the under faces of these extensions 14^a with a slight bevel so that the clamping plate 16 will be firmly wedged into clamping engagement with the upper face of the razor blade 19 whose forward cutting edge rests against the stop shoulders 20 at the forward guard edge of the supporting plate.

It will hardly be necessary to describe the operation of the razor in detail, as the locking function of the clamping plate 16 will be obvious, and the unclamping operation merely requires sufficient rearward pressure against the plate to withdraw it from frictional engagement with the under face of the inward extensions 14^a so that the clamping plate 16 may be swung to the position shown in dotted lines in Fig. 3 to permit the removal of the razor blade.

The provision of wedging means affords a very efficient frictional clamp which will maintain the razor blade in adjusted position during use. By providing a pivot point for the clamping arm which is offset from the plane of the supporting plate, the clamping arm may overlap and engage substantially the entire length of the razor blade and in addition it may be swung absolutely clear of the razor blade to facilitate removal and replacement thereof as well as to permit perfect cleansing of the parts.

While I have herein illustrated and described a specific embodiment of my invention, it should be understood that the same may be altered in detail and relative ar-

rangement of parts within the spirit of the invention and the scope of the appended claim.

What I claim, therefore, and desire to secure by Letters Patent is:

In a safety razor, a handle, a blade-supporting plate rigidly connected thereto at an angle and having a guard at its forward edge and stop shoulders adjacent said edge for a razor blade, said plate also having a longitudinally extending offset adjacent its rear edge and having integral lugs extending upwardly from its sides intermediate its forward and rear edges and overlying the upper face of said plate, the under faces of said lugs being formed with a bevel, a clamping arm pivoted at one end and adjacent its rear edge to said longitudinal offset and arranged to extend longitudinally of said plate for substantially its entire length and in a plane parallel therewith, said arm being arranged to swing toward and from the rear edge of said plate and being constructed to engage with its upper face the beveled under faces of said lugs whereby the under face of said arm may be wedged in frictional clamping engagement with the upper face of a razor blade seated over said supporting plate.

ERNEST N. HUMPHREY.

Witnesses:
W. J. WARAM, Jr.,
H. C. HINE.