Oct. 15, 1940. A. HÖCKENSTRÖM 2,217,750

FLUID FUEL BURNING STOVE

Filed July 26, 1939

Fig. 1.

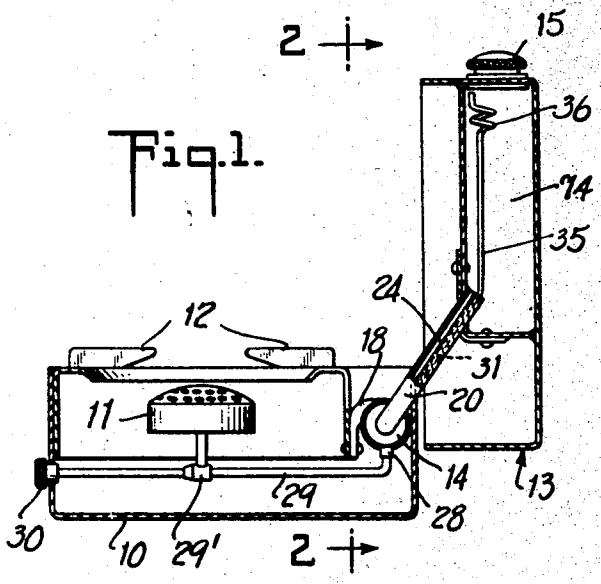

Fig. 2.

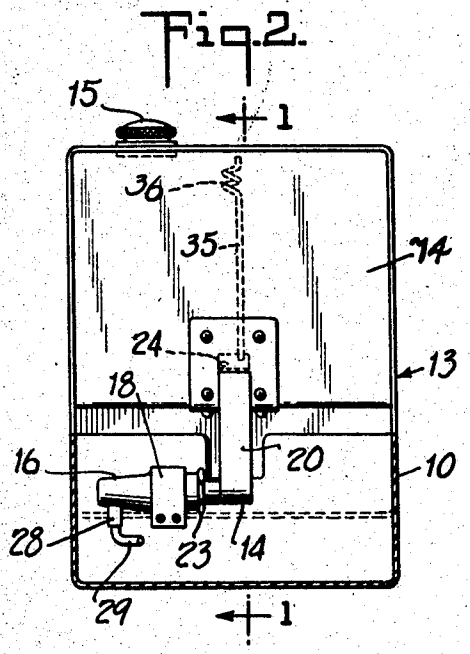

Fig. 3.

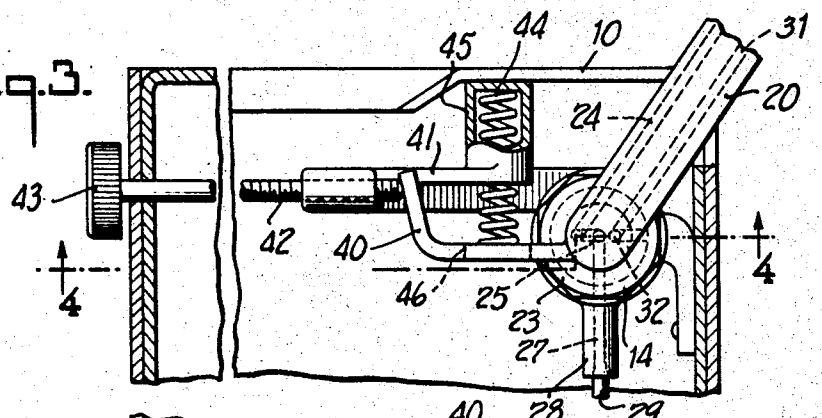

Fig. 4.

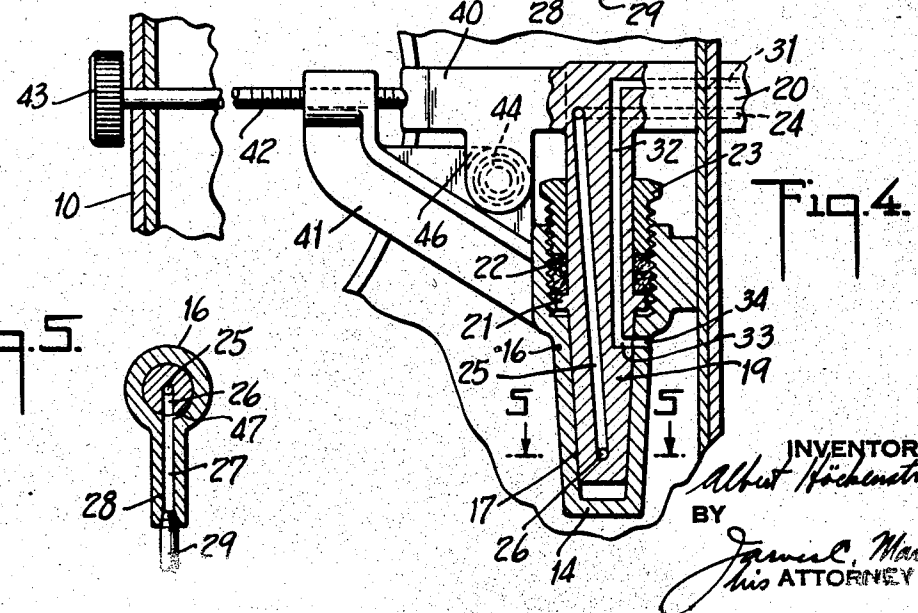

Fig. 5.

INVENTOR
Albert Höckenström
BY
James C. Marble
his ATTORNEY

Patented Oct. 15, 1940 2,217,750

UNITED STATES PATENT OFFICE

2,217,750

FLUID FUEL BURNING STOVE

Albert Höckenström, Lidingo, Sweden

Application July 26, 1939, Serial No. 286,552
In Sweden March 28, 1938

10 Claims. (Cl. 126—38)

My invention relates to a fluid fuel burning stove and particularly to a portable stove of this nature.

In accordance with my invention there is provided a base portion carrying one or more burners and a cover hinged thereto and carrying a fuel reservoir. The conduit connecting the reservoir with the burner is either flexible or provided with a pivoted connection, in order to permit hinging of the cover, and a valve is disposed in this conduit and operatively connected to the cover so as to be controlled by the position of the latter. Preferably, both the pivoted connection and the valve are combined and arranged as a hinge connecting the cover to the base, the arrangement being such that when the cover is closed the valve is likewise closed and when the cover is open the valve is open. Furthermore, there is provided a passage for admitting air into the reservoir as fuel is withdrawn. This passage likewise passes through the hinge, which serves as a valve therefor, so that the air passage is closed when the cover is closed in order to prevent the leakage of fuel therethrough.

Further objects and advantages of my invention will be apparent from the following description considered in connection with the accompanying drawing which form a part of this specification and of which:

Fig. 1 is a cross-sectional view of one embodiment of my invention and is taken on the line 1—1 of Fig. 2;

Fig. 2 is a cross-sectional view taken on the line 2—2 of Fig. 1;

Fig. 3 is a cross-sectional view on an enlarged scale showing another embodiment of my invention;

Fig. 4 is a cross-sectional view taken on the line 4—4 of Fig. 3; and

Fig. 5 is a cross-sectional view taken on the line 5—4 of Fig. 4.

Referring more particularly to Figs. 1 and 2, reference character 10 designates a base portion preferably made of sheet metal. Mounted within the base portion is a fuel burner 11. Above it are supports 12 for cooking utensils. Reference character 13 designates generally a cover which is secured to the base portion 10 by means of a combined hinge and valve 14. Formed within the cover 13 is a fuel reservoir 74 provided with a filling opening which is normally closed by means of a screw cap 15 or the like.

The member 14 is shown more in detail in Figs. 4 and 5. While these figures illustrate an embodiment different from that shown in Figs. 1 and 2, the interior construction of the combined hinge and valve 14 is the same and it will be described in connection with these figures. The member 14 includes an outer housing 16 having a tapered bore 17. Integral with housing 16 is a bracket 18, shown in Figs. 1 and 2, which bracket is rigidly secured to a portion of the base 10. Rotatably mounted within housing 16 is a valve member 19 integral with an arm 20, the outer end of which arm is rigidly secured to the cover 13. Valve member 19 is formed with an annular flange 21 against which is forced a packing 22 by means of a gland nut 23 which is threaded into the open end of housing 16. Thus, axial displacement of the member 19 within the housing 16 is prevented and these two members serve as a hinged connection between the base 10 and the cover 13.

Arm 20 is formed with a fuel passage 24 which communicates with the bottom of reservoir 74 and with an axially extending bore 25 formed within valve member 19. The other end of bore 25 communicates with a radially extending bore 26 forming a valve port which may be turned into and out of alignment with a passage 27 formed in a nipple 28 extending from the side of housing 16. A conduit 29 connects passage 27 with the fuel burner 11. A valve 29' may be placed in this conduit and controlled by a knob 30 for regulating flow of fuel to the burner. The location of radial bore 26 with respect to passage 27 is such that these are in alignment when the cover is in the open position shown in Figs. 1 and 2, but are out of alignment when the cover is closed.

Arm 24 is also provided with a passage 31 one end of which communicates with an axially extending bore 32 formed in valve member 19. Bore 32 in turn communicates with a radially extending bore 33 which may be turned into and out of alignment with a passage 34 in housing 16, which passage leads to the atmosphere. The relative locations of bore 33 and passage 44 are such that they are in alignment when bore 26 is in alignment with passage 27. Hence, bore 33 is connected to the atmosphere when the cover is open and disconnected therefrom when the cover is closed. The other end of passage 31 in arm 24 communicates with a conduit 35 which extends to the upper part of reservoir 74. Preferably, the upper end of conduit 35 is formed as one or more loops 36 in order to provide an air seal to prevent the entry of liquid fuel into the open end of the pipe when the cover is in closed position.

The above described device operates as follows: With the parts in the position shown in Figs. 1

and 2, fuel flows by gravity from reservoir 14 through the passage 24 in arm 17 and the passage 25 in valve member 19 to the radial bore 26. With the cover in the open position bore 26 is in alignment with passage 27, and consequently fuel flows into passage 27 and through conduit 29 to the burner 11. The amount of fuel flowing may be controlled by adjusting the valve 29' by means of the knob 30.

As fuel flows out of the reservoir, air enters through the passage 34 in the valve housing 16, the bores 33 and 32 in the valve member 19, the passage 31 in the arm 24 and the conduit 35, inasmuch as the bore 33 is in alignment with the passage 34 when the cover is open. Thus, the fuel may flow by gravity out of the reservoir without tending to create a vacuum therein.

When the cover 13 is closed this causes valve member 19 to be rotated approximately 90° with respect to housing 16. Thus, bore 26 is turned out of registration with passage 27 and the flow of fuel to the burner is cut off. Likewise, bore 33 is turned out of alignment with passage 34 and the communication between the reservoir and the atmosphere is closed, thus assuring that no fuel will escape through the air vent, regardless of the position into which the portable stove may be turned.

Due to the loops 36 near the upper end of the conduit 35 and due to the fact that this conduit is closed from the atmosphere, liquid fuel will not flow into the conduit when the cover is in closed position for the reason that the air trapped in the remainder of the conduit will not flow around the loops, the axis of which is horizontal when the cover is closed. Hence, the air trapped in this manner within the conduit prevents the entry of liquid. If such liquid were to enter, it could not leak out as long as the cover remains closed, but would run out when the cover is next opened.

In the embodiment illustrated in Figs. 3 through 5, the supply of fuel to the burner is regulated by adjusting the angular position of the cover when open to thereby vary the flow through the valve 14. As is shown particularly in Figs. 3 and 4 an arm 40 is integral with or rigidly secured to valve member 19 and arm 20 so as to be pivoted therewith. Integral with or rigidly secured to housing 16 is a bracket 41 the end of which is threaded so as to receive a threaded pin 42. One end of the pin extends outside of the base 10 where it is provided with a knob 43 while the other end of the pin is adapted to contact arm 40. A coil spring 44 is received within a cylindrical member 45 which is carried by the arm 41. The free end of spring 44 is arranged to be contacted by a projection 46 formed on arm 40. Thus, the spring 44 tends to move the arm 40 in a counterclockwise direction, as viewed in Fig. 3, while the pin 42 when screwed against the arm 40 turns it in a clockwise direction.

The relative locations of the bores 26 and 33 and the passages 27 and 34, respectively, are such that when the arm 40 is in contact with the end of spring 44, but not subject to any turning moment exerted by the pin 42, these bores and passages are not in alignment, but are close to it. Thus, when the pin 42 is screwed in, and turns the arm 40 in a clockwise direction against the action of spring 44, the bores and passages are brought gradually into alignment. In this way, the area of the valve openings may be regulated so as to control the flow of fuel to the burner, as well as to control the flow of air to the upper part of the reservoir.

A very fine adjustment of the valve may be obtained if the housing 16 is formed with a tapered recess 47 adjacent to the inner end of passage 27, as is clearly illustrated in Fig. 5.

Spring 44 not only serves for the purposes above described, but also acts as a resilient stop or bumper for preventing damage to the parts if the cover 11 is thrown open too suddenly.

While I have shown two more or less specific embodiments of my invention, this has been done for purposes of illustration only and various modifications thereof fall within its scope. For instance, while I have shown both the fuel conduit and the air conduit passing through a single combined hinge and valve, it is obvious that two such combined hinges and valves could be employed, the fuel conduit passing through one and the air conduit through the other. Likewise while only one burner has been shown, it is clear that a plurality of such burners could be connected to the conduit 29 without departing from the scope of my invention, which is to be determined by the appended claims.

What is claimed is:

1. In a stove for burning fluid fuel, a base portion, a fuel burner carried by said base portion, a cover hinged to said base portion, a fuel reservoir carried by said cover, conduit means connecting said reservoir to said burner, and valve means interposed in said conduit for controlling flow therethrough and operatively connected to said cover so as to be open when the cover is open and closed when the cover is closed.

2. In a stove for burning fluid fuel, a base portion, a fuel burner carried by said base portion, a cover for said base portion, a fuel reservoir carried by said cover, conduit means connecting said reservoir to said burner, a valve having relatively rotatable elements interposed in said conduit for controlling flow therethrough, means connecting one of said elements to said base portion, and means connecting the other element to said cover whereby opening and closing of said cover opens and closes, respectively, said valve.

3. In a stove for burning fluid fuel, a base portion, a fuel burner carried by said base portion, a cover for said base portion, a fuel reservoir carried by said cover, conduit means connecting said reservoir to said burner, a valve having relatively rotatable elements interposed in said conduit for controlling flow therethrough, means connecting one of said elements to said base portion, means connecting the other element to said cover whereby opening and closing of said cover opens and closes, respectively, said valve, and means to adjust the open position of said cover to thereby regulate the degree of opening of said valve.

4. In a stove for burning fluid fuel, a base portion, a fuel burner carried by said base portion, a cover hinged to said base portion, a fuel reservoir carried by said cover, conduit means connecting said reservoir to said burner, conduit means venting said reservoir to the atmosphere, and valve means interposed in both of said conduit means for controlling flow therethrough and operatively connected to said cover so as to be open when the cover is open and closed when the cover is closed.

5. In a stove for burning fluid fuel, a base portion, a fuel burner carried by said base portion, a cover for said base portion, a fuel reservoir car-

ried by said cover, a valve having relatively rotatable elements formed with separate passages for parallel flow therethrough, one of said elements being secured to said cover and the other to said base, a fuel conduit leading from said reservoir to a passage in the first-mentioned element, a fuel conduit leading from the corresponding passage in the other element to said burner, an air conduit leading from said reservoir to another passage in said first-mentioned element, and an air conduit leading from the other passage in said other element to the atmosphere, the passages in said elements being so arranged that both passages are open when said cover is open and closed when the cover is closed.

6. In a stove for burning fluid fuel, a base portion, a fuel burner carried by said base portion, a cover for said base portion, a fuel reservoir carried by said cover, a valve having relatively rotatable elements formed with separate passages for parallel flow therethrough, one of said elements being secured to said cover and the other to said base, a fuel conduit leading from said reservoir to a passage in the first-mentioned element, a fuel conduit leading from the corresponding passage in the other element to said burner, an air conduit leading from said reservoir to another passage in said first-mentioned element, an air conduit leading from the other passage in said other element to the atmosphere, the passages in said elements being so arranged that both passages are open when said cover is open and closed when the cover is closed, and means to adjust the open position of said cover to thereby regulate the degree of opening of said passages.

7. In a stove for burning fluid fuel, a base portion, a fuel burner carried by said base portion, a cover, a hinge structure for pivotally securing said cover to said base, said structure including inner and outer relatively rotatable parts, one of said parts being connected to said base and the other to said cover, said parts having passages alignable by rotation of said parts, a fuel reservoir carried by said cover, a conduit connecting said reservoir with the passage in the part connected to the cover, and a conduit connecting the passage in the other part with said burner, said passages being so located that they are in alignment when said cover is open and out of alignment when the cover is closed.

8. In a stove for burning liquid fuel, a base portion, a fuel burner carried by said base portion, a cover hinged to said base portion, a fluid reservoir carried by said cover, conduit means for connecting said reservoir to said burner, conduit means for connecting said reservoir to the atmosphere, and valve means interposed in both of said conduit means for controlling flow therethrough and operatively connected to said cover so as to be open when the cover is open and closed when the cover is closed, the second-mentioned conduit means communicating with said reservoir at a point which is at the top of the reservoir when the cover is in open position, and means for preventing entry of liquid into said second-mentioned conduit means when the cover is in closed position.

9. In a stove for burning liquid fuel, a base portion, a fuel burner carried by said base portion, a cover hinged to said base portion, a fluid reservoir carried by said cover, conduit means for connecting said reservoir to said burner, conduit means for connecting said reservoir to the atmosphere, and valve means interposed in both of said conduit means for controlling flow therethrough and operatively connected to said cover so as to be open when the cover is open and closed when the cover is closed, the second-mentioned conduit means communicating with said reservoir at a point which is at the top of the reservoir when the cover is in open position, the end of said second-mentioned conduit means being formed as an air seal to prevent entry of liquid therein when the cover is in closed position.

10. In a stove for burning fluid fuel, a base portion, a fuel burner carried by said base portion, a cover for said base portion, a fuel reservoir carried by said cover, conduit means connecting said reservoir to said burner, a valve having relatively rotatable elements interposed in said conduit for controlling flow therethrough, means connecting one of said elements to said base portion, means connecting the other element to said cover whereby opening and closing of said cover opens and closes, respectively, said valve, resilient means tending to move said cover toward closed position, and a threaded member for moving said cover against the force of said spring, whereby the open position of said cover may be adjusted to regulate the degree of opening of said valve.

ALBERT HÖCKENSTRÖM.