PCT WORLD INTELLECTUAL PROPERTY ORGANIZATION
International Bureau

INTERNATIONAL APPLICATION PUBLISHED UNDER THE PATENT COOPERATION TREATY (PCT)

(51) International Patent Classification 7 : A61B 10/00 | A3

(11) International Publication Number: **WO 00/38577**

(43) International Publication Date: 6 July 2000 (06.07.00)

(21) International Application Number: PCT/IB99/02024

(22) International Filing Date: 20 December 1999 (20.12.99)

(30) Priority Data:
09/219,344 23 December 1998 (23.12.98) US

(71) Applicant: BOSTON SCIENTIFIC LIMITED [BB/BB]; Financial Services Centre, Bishop's Court Hill, P.O. Box 111, St. Michael (BB).

(72) Inventor: NISHTALA, Srinivas; 2115 Summerwood Court, Bloomington, IN 47401 (US).

(74) Agents: GARRETT, Arthur, S. et al.; Finnegan, Henderson, Farabow, Garret & Dunner, L.L.P., 1300 I Street, N.W., Washington, DC 20005-3315 (US).

(81) Designated States: AU, CA, JP, European patent (AT, BE, CH, CY, DE, DK, ES, FI, FR, GB, GR, IE, IT, LU, MC, NL, PT, SE).

Published
With international search report.

(88) Date of publication of the international search report:
21 September 2000 (21.09.00)

(54) Title: SEMI-AUTOMATIC BIOPSY DEVICE AND RELATED METHOD OF USE

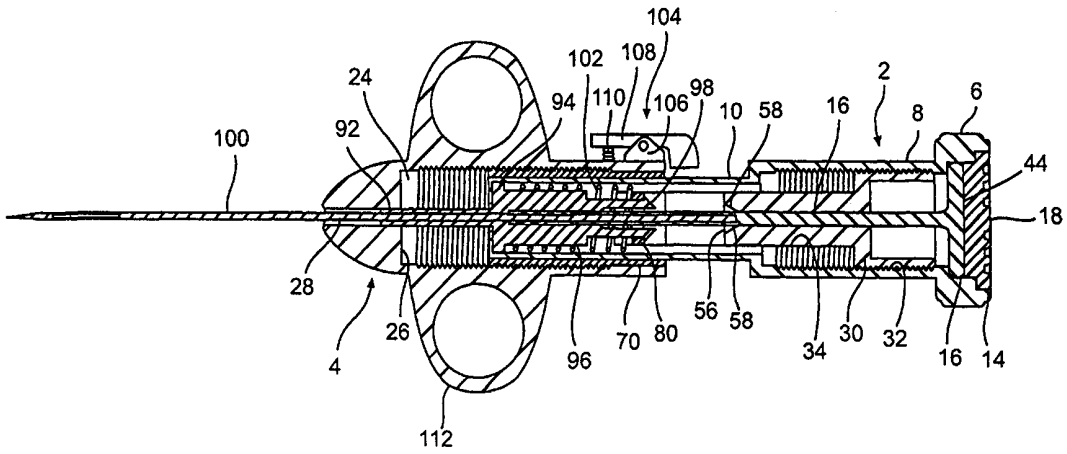

(57) Abstract

A tissue sampling device, comprising a stylet having a notch therein and a cannula at least partially surrounding the stylet. The notch has an exposed portion for receiving tissue to be sampled, and the cannula is adjustable relative to the stylet to vary the size of the exposed portion and therefore the amount of tissue to be sampled. The device also comprises a trigger mechanism operatively connected to at least one of the cannula and the stylet. Acutation of the trigger mechanism causes relative movement of the stylet with respect to the cannula for collection of a tissue sample.

FOR THE PURPOSES OF INFORMATION ONLY

Codes used to identify States party to the PCT on the front pages of pamphlets publishing international applications under the PCT.

AL	Albania	**ES**	Spain	**LS**	Lesotho	**SI**	Slovenia
AM	Armenia	**FI**	Finland	**LT**	Lithuania	**SK**	Slovakia
AT	Austria	**FR**	France	**LU**	Luxembourg	**SN**	Senegal
AU	Australia	**GA**	Gabon	**LV**	Latvia	**SZ**	Swaziland
AZ	Azerbaijan	**GB**	United Kingdom	**MC**	Monaco	**TD**	Chad
BA	Bosnia and Herzegovina	**GE**	Georgia	**MD**	Republic of Moldova	**TG**	Togo
BB	Barbados	**GH**	Ghana	**MG**	Madagascar	**TJ**	Tajikistan
BE	Belgium	**GN**	Guinea	**MK**	The former Yugoslav Republic of Macedonia	**TM**	Turkmenistan
BF	Burkina Faso	**GR**	Greece			**TR**	Turkey
BG	Bulgaria	**HU**	Hungary	**ML**	Mali	**TT**	Trinidad and Tobago
BJ	Benin	**IE**	Ireland	**MN**	Mongolia	**UA**	Ukraine
BR	Brazil	**IL**	Israel	**MR**	Mauritania	**UG**	Uganda
BY	Belarus	**IS**	Iceland	**MW**	Malawi	**US**	United States of America
CA	Canada	**IT**	Italy	**MX**	Mexico	**UZ**	Uzbekistan
CF	Central African Republic	**JP**	Japan	**NE**	Niger	**VN**	Viet Nam
CG	Congo	**KE**	Kenya	**NL**	Netherlands	**YU**	Yugoslavia
CH	Switzerland	**KG**	Kyrgyzstan	**NO**	Norway	**ZW**	Zimbabwe
CI	Côte d'Ivoire	**KP**	Democratic People's Republic of Korea	**NZ**	New Zealand		
CM	Cameroon			**PL**	Poland		
CN	China	**KR**	Republic of Korea	**PT**	Portugal		
CU	Cuba	**KZ**	Kazakstan	**RO**	Romania		
CZ	Czech Republic	**LC**	Saint Lucia	**RU**	Russian Federation		
DE	Germany	**LI**	Liechtenstein	**SD**	Sudan		
DK	Denmark	**LK**	Sri Lanka	**SE**	Sweden		
EE	Estonia	**LR**	Liberia	**SG**	Singapore		

INTERNATIONAL SEARCH REPORT

	ıtional Application No
	PCT/IB 99/02024

A. CLASSIFICATION OF SUBJECT MATTER
IPC 7 A61B10/00

According to International Patent Classification (IPC) or to both national classification and IPC

B. FIELDS SEARCHED

Minimum documentation searched (classification system followed by classification symbols)
IPC 7 A61B

Documentation searched other than minimum documentation to the extent that such documents are included in the fields searched

Electronic data base consulted during the international search (name of data base and, where practical, search terms used)

C. DOCUMENTS CONSIDERED TO BE RELEVANT

Category °	Citation of document, with indication, where appropriate, of the relevant passages	Relevant to claim No.
X	US 5 313 958 A (BAUER) 24 May 1994 (1994-05-24) column 3, line 4 -column 4, line 42; figures 1-6	1-5

X	WO 92 00040 A (BENNETT LAVON L) 9 January 1992 (1992-01-09) page 7, line 3 -page 13, line 30	1-3,6-9

A	US 5 842 999 A (PRUITT ET AL.) 1 December 1998 (1998-12-01) abstract; figure 1	1

☐ Further documents are listed in the continuation of box C.

☒ Patent family members are listed in annex.

° Special categories of cited documents :

"A" document defining the general state of the art which is not considered to be of particular relevance

"E" earlier document but published on or after the international filing date

"L" document which may throw doubts on priority claim(s) or which is cited to establish the publication date of another citation or other special reason (as specified)

"O" document referring to an oral disclosure, use, exhibition or other means

"P" document published prior to the international filing date but later than the priority date claimed

"T" later document published after the international filing date or priority date and not in conflict with the application but cited to understand the principle or theory underlying the invention

"X" document of particular relevance; the claimed invention cannot be considered novel or cannot be considered to involve an inventive step when the document is taken alone

"Y" document of particular relevance; the claimed invention cannot be considered to involve an inventive step when the document is combined with one or more other such documents, such combination being obvious to a person skilled in the art.

"&" document member of the same patent family

Date of the actual completion of the international search	Date of mailing of the international search report
10 March 2000	22. 06. 2000

Name and mailing address of the ISA	Authorized officer
European Patent Office, P.B. 5818 Patentlaan 2 NL - 2280 HV Rijswijk Tel. (+31-70) 340-2040, Tx. 31 651 epo nl, Fax: (+31-70) 340-3016	MOERS, R

INTERNATIONAL SEARCH REPORT

ernational application No.
PCT/IB 99/02024

Box I Observations where certain claims were found unsearchable (Continuation of item 1 of first sheet)

This International Search Report has not been established in respect of certain claims under Article 17(2)(a) for the following reasons:

1. [X] Claims Nos.: 15-26
because they relate to subject matter not required to be searched by this Authority, namely:

Rule 39.1(iv) PCT - Method for treatment of the human or animal body by surgery

2. [ ] Claims Nos.:
because they relate to parts of the International Application that do not comply with the prescribed requirements to such an extent that no meaningful International Search can be carried out, specifically:

3. [ ] Claims Nos.:
because they are dependent claims and are not drafted in accordance with the second and third sentences of Rule 6.4(a).

Box II Observations where unity of invention is lacking (Continuation of item 2 of first sheet)

This International Searching Authority found multiple inventions in this international application, as follows:

see additional sheet

1. [ ] As all required additional search fees were timely paid by the applicant, this International Search Report covers all searchable claims.

2. [ ] As all searchable claims could be searched without effort justifying an additional fee, this Authority did not invite payment of any additional fee.

3. [ ] As only some of the required additional search fees were timely paid by the applicant, this International Search Report covers only those claims for which fees were paid, specifically claims Nos.:

4. [X] No required additional search fees were timely paid by the applicant. Consequently, this International Search Report is restricted to the invention first mentioned in the claims; it is covered by claims Nos.:

1-9

Remark on Protest

[ ] The additional search fees were accompanied by the applicant's protest.

[ ] No protest accompanied the payment of additional search fees.

INTERNATIONAL SEARCH REPORT

International Application No. PCT/IB 99/02024

FURTHER INFORMATION CONTINUED FROM PCT/ISA/ 210

1. Claims: 1-9

Tissue sampling device comprising a stylet, a cannula and a trigger mechanism whereby the cannula is adjustable relative to the stylet to vary the sample size.

2. Claim : 10

Tissue sampling device comprising a stylet, a cannula and a trigger mechanism whereby the trigger mechanism is connected such that relative movement of the stylet occurs independently of positioning of the notch.

3. Claims: 11-14

Tissue sampling device comprising a stylet, a cannula, a trigger mechanism and a locking mechanism preventing relative movement between the cannula and the stylet.

INTERNATIONAL SEARCH REPORT

.formation on patent family members

In ional Application No
PCT/IB 99/02024

Patent document cited in search report	Publication date	Patent family member(s)	Publication date
US 5313958 A	24-05-1994	NONE	
WO 9200040 A	09-01-1992	US 5156160 A	20-10-1992
		AU 646270 B	17-02-1994
		AU 8105091 A	23-01-1992
		CA 2085998 A	23-12-1991
		EP 0535140 A	07-04-1993
US 5842999 A	01-12-1998	US 5993399 A	30-11-1999