May 7, 1929. F. BARDEN 1,711,767

FUEL CONTROL ATTACHMENT FOR CARBURETORS

Filed April 19, 1926

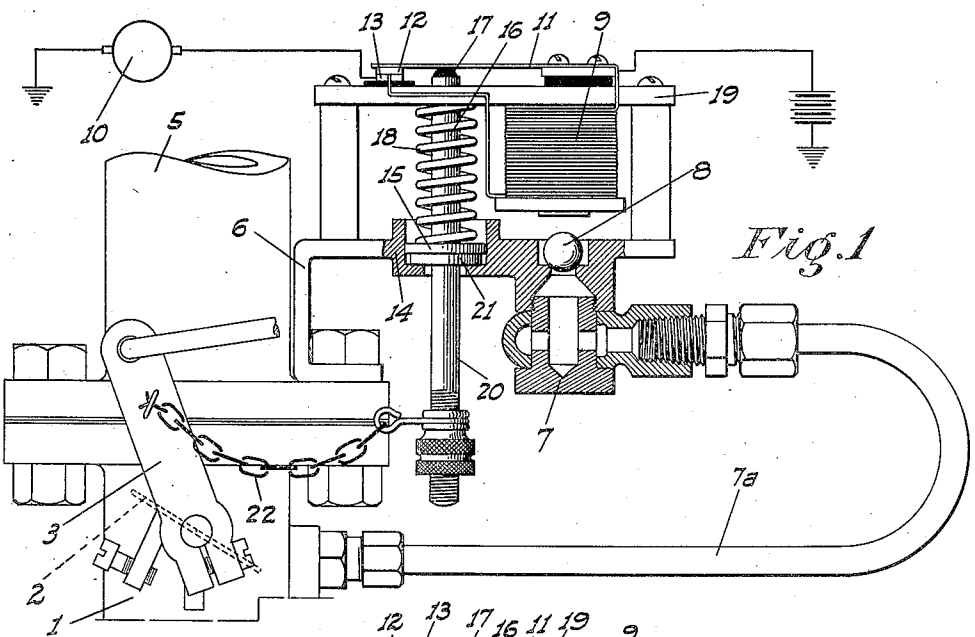

Fig. 1

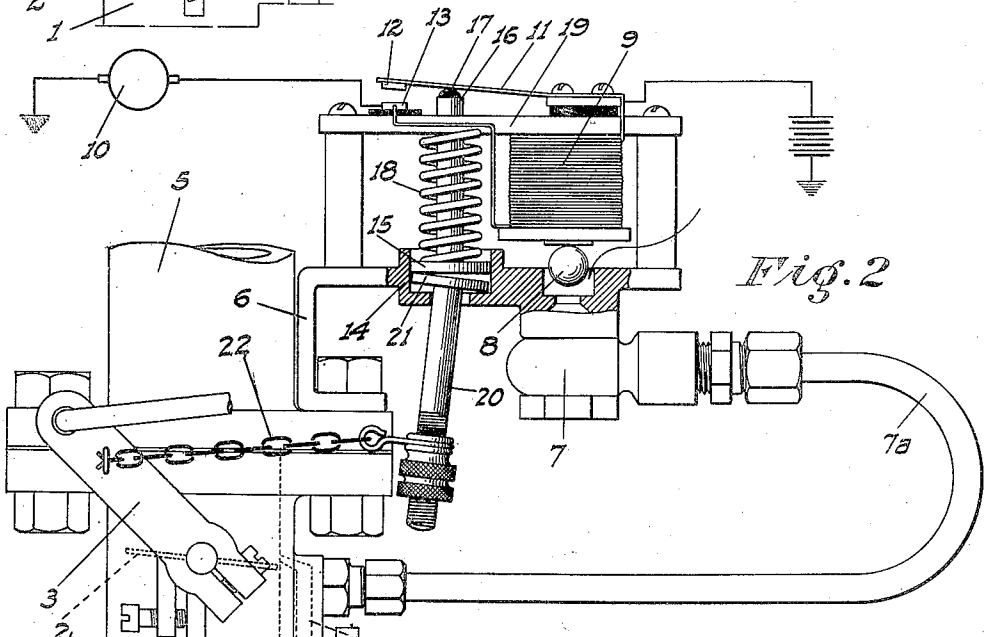

Fig. 2

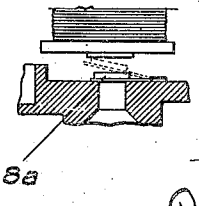

Fig. 3

INVENTOR

Fred Barden

BY

ATTORNEY

Patented May 7, 1929. 1,711,767

UNITED STATES PATENT OFFICE.

FRED BARDEN, OF LOS ANGELES, CALIFORNIA.

FUEL-CONTROL ATTACHMENT FOR CARBURETORS.

Application filed April 19, 1926. Serial No. 102,888.

This invention relates to a fuel control attachment for carburetors of that type set forth in my co-pending application for patent Serial No. 60,494. The primary objects of the present invention are the same as those set forth in the above identified application, hence no repetition thereof will be here indulged in. The present invention relates to improved and refined structure over that shown in the previous application, the elimination of parts and cost of manufacture, and advance in efficiency and positiveness of operation.

These objectives are obtained by means of such structure and relative arrangement of parts as will fully appear by a perusal of the following specification and claim.

In the drawings similar characters of reference indicate corresponding parts in the several views:

Fig. 1 is a side elevation of the attachment, partly in section, showing the parts as they appear in inoperative position.

Fig. 2 is a similar view showing the parts as they appear when in operative position.

Fig. 3 is a fragmentary view showing a modified form of air valve from that shown in the other views.

Referring now more particularly to the characters of reference on the drawings the numeral 1 designates the carburetor having the usual butterfly valve 2 and its control arm 3 and idling jet 4, while 5 is the manifold intake to the motor to which the carburetor is connected.

My improved attachment comprises a bracket or like support 6 for attachment to or adjacent the intake manifold and carrying an air inlet valve body 7 connected by a pipe 7^a with the idling jet 4. The valve 8 may be either of the ball type to hold its closed position by gravity, as shown in Fig. 1, or it may be of the flap type 8^a shown in Fig. 3 adapted to hold its closed position under the tension of a band spring.

Adjacent the valve is an electro-magnet 9 adapted when energized to lift the valve from its seat and open communication from the atmosphere through the pipe 7^a to the idling jet 4.

The electro-magnet 9 is wired in series with the generator 10 of the motor or other suitable source of electric energy. A shunt circuit is established across the terminals of the electro-magnet by a spring blade switch 11 or the like having make and break points 12 and 13.

A circular guide chamber 14 is arranged on the bracket 6, and fitting the bore thereof and movable therein is a plunger 15 having a stem 16 extending into contact with the switch blade 11 with suitable insulation 17 interposed between the two. When the attachment is in inoperative position a yieldable spring 18 interposed between the plunger 15 and the frame 19 normally holds the plunger in retracted position so that the points 12 and 13 are together and the electro-magnet deenergized. A pin 20 projects into the chamber 14 behind the plunger 15 and has a cross head 21 thereon. Such cross head is of a lesser diameter than that of the chamber so that it can be canted into engagement with the plunger 15 to move the plunger and stem 16 to move the blade 11 and separate the points 12 and 13. A flexible link 22 connects the pin 20 with the arm 3 and is of such a length and adjustment that when the carburetor is in complete decelerated position the pin 20 and cross head 21 are canted to hold the points 12 and 13 spaced apart as described.

The operation of the device is as follows:

When the motor is running at normal accelerated speed the arm 3 is advanced from its closed position shown in Fig. 2 to an intermediate position shown in Fig. 1. Under these conditions the flexible link 22 becomes slack and the pressure of the spring 18 against the plunger 15 and cross head 21 straightens the cross head and pin 20 so that the plunger may move to its innermost position within the chamber 14. This brings the pin 16 out of contact with the blade 11 and allows the points 12 and 13 to move into contact. Under these conditions the generator 10 of course is operating to generate electric energy, but this energy instead of acting to energize the electro-magnet 9 shunts across the shunt circuit described and leaves the electro-magnet inactive. When the electro-magnet is inactive the valve 8 is in closed position so that the suction from the motor through the intake manifold 5 acts in its normal way to draw fuel from the carburetor into the motor.

Should the operator suddenly decelerate the carburetor the arm 3 moves to its closed position, although the motor itself may be turning over fast enough under momentum

to keep the generator 10 operative. Under these conditions the pin 20 is canted by the pull of the arm 3 and link 22 to cant the cross head 21 and move the plunger 15 to cause the pin 16 to act against the blade 11 and separate the points 12 and 13. Thus since the generator is still generating electric energy, this energy passes through the electro-magnet 9 and energizes it. This causes the magnet to lift the valve 8 from its seat, whereupon air from the atmosphere passes through the valve opening and the pipe 7^a into and through the idling jet 4 into the motor. This action prevents any fuel being raised through the jet 4 into the motor and hence there is no consumption of fuel nor possibility of accumulation of unburned fuel in the motor with consequent deleterious effect upon the lubrication of the motor, nor possibility of crank case dilution.

When the speed of the motor settles down to a point where the generator 10 cuts out, this of course deenergizes the magnet 9 and the valve 8 drops to closed position. If the valve is a ball as shown in Figs. 1 and 2 it drops to position by gravity, or if it is of the type shown in Fig. 3 it is forced to position by the spring flap.

When the valve 8 closes again then of course normal idling conditions are established.

From the foregoing description it can be seen that this attachment, while very simple and inexpensive, can function very efficiently to prevent any fuel being drawn into the motor except when so desired, either for actual load conditions or when idling, and as has already been pointed out in my co-pending application for patent, this results not only in the saving of fuel consumption, but overcomes the many objections to drawing raw fuel into the motor when not needed.

While this specification sets forth in detail the present and preferred construction of the device, still in practice such deviations from such detail may be resorted to as do not form a departure from the spirit of the invention, as defined by the appended claim.

Having thus described my invention what I claim as new and useful and desire to secure by Letters Patent is:

The combination with the carburetor of an engine having a throttle, of an air valve having communication with the carburetor, an electro-magnet to control the position of the valve, a generator adapted when running above a predetermined speed to energize the magnet, a shunt circuit normally closed to de-energize the electro-magnet when the throttle is open and the generator running above the predetermined speed, means to open the shunt circuit when the throttle is closed and the generator is still running above the predetermined speed to thereupon energize the magnet to open the valve, the valve being then movable to closed position as soon as the generator ceases to run above such speed as will maintain the magnet energized.

In testimony whereof I affix my signature.

FRED BARDEN.