Feb. 11, 1958 N. W. SEAQUIST 2,822,961

AEROSOL BOMB

Filed June 25, 1954

Fig. 1.

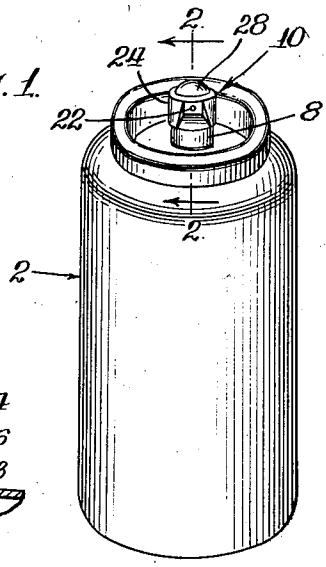

Fig. 6.

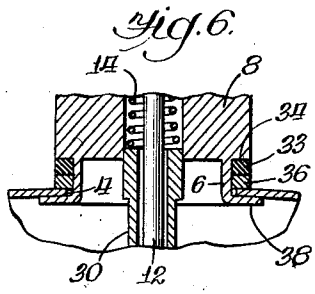

Fig. 4.

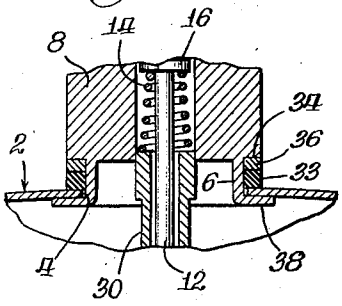

Fig. 5.

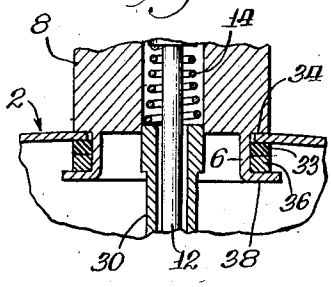

Fig. 2.

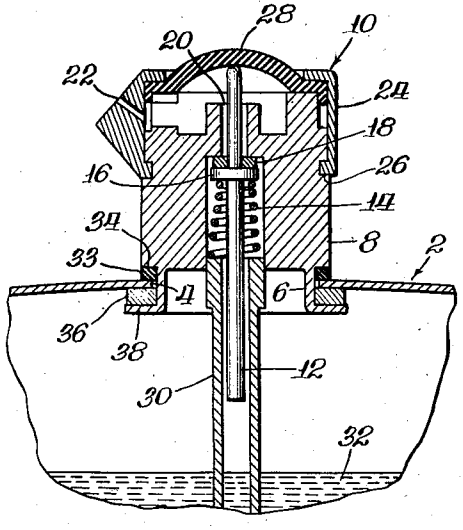

Fig. 3.

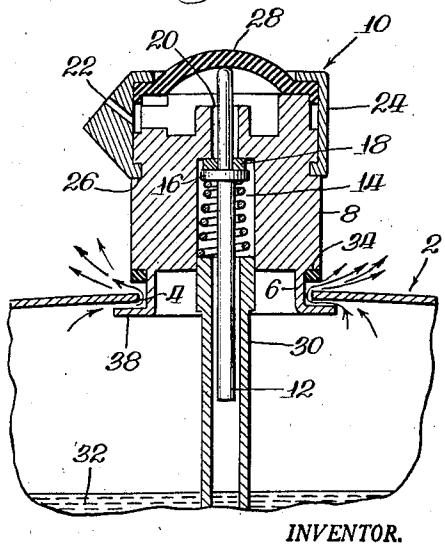

INVENTOR.

Nels W. Seaquist

BY Walter L. Schlegel, Jr.

Atty

United States Patent Office

2,822,961

Patented Feb. 11, 1958

2,822,961

AEROSOL BOMB

Nels W. Seaquist, Crystal Lake, Ill.

Application June 25, 1954, Serial No. 439,247

8 Claims. (Cl. 222—397)

This invention relates to aerosol bombs, and more particularly to novel means for preventing development of dangerous pressure in such a bomb caused by accidental overheating thereof, as by fire or other means.

According to prior art practices, such a bomb generally contains a liquid to be dispensed dissolved in a low boiling point propellent liquid such as Freon or ether. Thus at room temperature whenever pressure in the container of the bomb drops below a predetermined value, due to dispensing of the contents, the propellent liquid boils until the pressure again reaches said value.

However, shipment and storage of such a bomb are hazardous because when subjected to higher than room temperatures of 160° F. or more depending upon the construction of the container, the latter will explode causing great risk to adjacent people and articles. For this reason, such bombs cannot be mailed despite the great demand therefor on a mail order basis.

Accordingly, a primary object of the present invention is to release pressure within the bomb before the temperature thereof reaches a dangerously high value.

Another object of the invention is to utilize the sealed connection between the bomb container and its dispensing valve for releasing pressure in the bomb at a predetermined temperature value.

A more specific object of the invention is to seal the container around its opening which receives the valve body by compressing a resilient gasket around the body and by maintaining such compression with a fusible washer which melts to release compression of the gasket before the temperature of the container reaches a dangerous value.

The foregoing and other objects and advantages of the invention will become apparent from a consideration of the following specification and accompanying drawings, wherein:

Figure 1 is a perspective view of an aerosol bomb embodying a preferred form of the invention;

Figure 2 is a sectional view on line 2—2 of Figure 1;

Figure 3 is a view similar to Figure 2 but showing the fusible washer melted to release pressure in the container; and

Figures 4 to 6 are sectional views, respectively, corresponding to Figure 2, but illustrating modifications of the invention.

Describing the invention in detail and referring first to Figures 1–3, it will be seen that the novel aerosol bomb comprises a conventional container member 2 having an opening 4 for the reception of a flange portion 6 of a valve body member 8.

The body member 8 is part of a dispensing valve 10 having a stem 12 spring-biased to closed position by a spring 14 bearing against a flange or collar 16 of the stem. The upper or outer side of collar 16 is provided with a gasket 18 which releasably seals a port 20 of the body member 8 to cut off flow of fluid from the container member 2 to a nozzle 22 of a ring 24 which is recessed

at 26 in the body member 8 and which clamps a diaphragm 28 against the top of the body member to seal the open top thereof.

The stem 12 may be manually opened by the pressure of an operator's finger on the diaphragm 28, whereby fluid under pressure in the container member is dispensed from the nozzle 22.

In the illustrated embodiments of the invention the body member 2 is provided with a tube 30 which extends almost to the bottom of the container member 2, to deliver dispensed liquid 32 to the port 20. Normally the liquid 32 is dissolved in a low boiling point propellent liquid, such as Freon or ether, so that at room temperature the propellent liquid boils to develop vapor pressure against the top of the dispensed liquid until the pressure is sufficiently high to prevent further boiling of the propellent liquid at room temperature.

If the dispensed fluid is entirely vapor or gas under pressure, the tube 30 may be eliminated.

As best seen in Figure 2, the opening 4 is sealed by a resilient gasket 33 seated against the container member 2 externally thereof and seated against a shoulder portion 34 of the valve body member 8. The gasket is maintained under compression by a fusible washer 36 seated against the container member 2 internally thereof and compressed by the flange portion 6 which is crimped against the washer 36 as at 38.

The washer 36 is preferably formed of a low melting point alloy which melts or fuses at a temperature below 200° F. and preferably at about 160° F. in order to release pressure in the container member 2 as shown in Figure 3.

However, the washer may be of any desired fusible material which fuses at a temperature below that at which pressure in the container member 2 might explode the latter. Moreover, the washer, although illustrated as thicker than the gasket 33 may be paper thin, depending upon the amount of compression on the gasket 33 to seal the opening 4.

It may be noted with reference to Figure 3 that the crimped part 38 of the flange portion 6 is irregular and may even be split so that release of pressure in the container member 2 is ensured when the washer 36 fuses.

It will be readily understood that in the embodiment of Figures 1–3, the gasket and washer may be reversed.

Referring now to Figure 4, which illustrates a modification wherein parts corresponding to those of Figures 1–3 are identified by corresponding numerals, it will be seen that the fusible washer 36 is compressed between the gasket 33 and the shoulder portion 34 of the valve body member 8, the flange portion 6 thereof being crimped as at 38 against the container member 2 internally thereof.

Figure 5 illustrates another modification wherein the gasket 33 is positioned internally of the container member 2, and the fusible washer 36 is compressed against the gasket by the flange portion 6 which is crimped against the washer 36 as at 38. In this modification the shoulder portion 34 of the valve body member 8 seats against the container 2 externally thereof.

Referring now to Figure 6, the washer 36 is illustrated as a paper thin diaphragm compressed against the container externally thereof by the gasket 33 which is compressed against the shoulder portion 34 of the valve body member 8. In this modification, the flange portion 6 is crimped as at 38 against the container internally thereof. The washer 36 and engaged surface of the container 2 are formed with very smooth interengaged faces which seat in fluid tight engagement under the compression of gasket 33.

Thus it will be understood that the invention comprehends an arrangement by which dangerous pressure within

an aerosol bomb is released by melting of a fusible washer which maintains compression on a gasket sealing the connection between the container member and dispensing valve of the bomb.

Other forms of the invention will be apparent to those skilled in the art without departing from the spirit of the invention or the scope of the appended claims.

What is claimed is:

1. An aerosol bomb comprising a container member containing fluid to be dispensed under superatmospheric pressure, a valve body having a flange extending into an opening of said container member, a compressed resilient annular gasket tightly sleeved over said flange and sealing said opening at one side thereof, means for maintaining said gasket under compression comprising a fusible washer which fuses at a temperature below that at which said pressure causes said container member to explode, said flange having a crimped portion at its inner end maintaining said gasket and washer under compression, normally closed releasable valve means in said valve body, and a delivery tube encircled by said gasket and by said washer, said tube extending approximately to the bottom of the container and being connected to the valve means to deliver said fluid therethrough upon release of said valve means.

2. An aerosol bomb comprising a container containing fluid under superatmospheric pressure, a dispensing valve comprising a body extending into an opening of said container, said valve body having a shoulder portion around said opening overlapping the container externally thereof, and said body having a flange portion around said opening overlapping the container internally thereof, a fusible washer seated against one of said portions, said washer having a portion facing the opening, a resilient gasket compressed between and against said container and one of said portions to afford a seal around said body, said washer being fusible at a temperature below 200° F., and a delivery tube encircled by said gasket and by said washer, said tube being connected to the bottom of the valve body and extending approximately to the bottom of the container to deliver fluid therefrom upon opening of the valve.

3. An aerosol bomb comprising a container member containing fluid under superatmospheric pressure, an opening in said container, a dispensing valve comprising a body member received within said opening, a fusible washer member seated against one of said container and body members, a resilient gasket around said opening compressed by and between said container member and one of said body and gasket members to seal said opening around said body, and a delivery tube encircled by said washer member and by said gasket, said tube extending through said opening and being connected to the valve body, and said tube extending approximately to the bottom of the container to deliver fluid therefrom upon actuation of the valve.

4. An aerosol bomb comprising a container containing fluid under superatmospheric pressure, an opening in said container, a valve body in said opening, a resilient gasket sealing said opening at one side thereof and compressed against a portion of said body around said opening, means maintaining said gasket under compression comprising a fusible washer under compression by said gasket, and a delivery tube extending from approximately the bottom of the container through said opening and said gasket, said tube being connected to the valve body to deliver fluid therethrough.

5. A bomb according to claim 4, wherein the gasket is seated against the container externally thereof and is seated against a shoulder of said body, the washer being compressed against the container by a flange on said body inside said container.

6. A bomb according to claim 4 wherein the gasket is seated against the container internally thereof and is clamped by a flange portion of said body, the washer being seated against the container externally thereof and against a shoulder of said body.

7. A bomb according to claim 4, wherein the washer is seated against a shoulder of said body, and the gasket is compressed between said washer and said container.

8. An aerosol bomb comprising a container member having an opening, a valve body having an annular flange extending into said opening, an annular crimped portion on the inner end of said flange, an annular shoulder on said body facing said crimped portion in alignment therewith, said shoulder being disposed externally of said opening, a fusible washer member and a resilient gasket member sleeved on said flange in alignment with a portion of the container defining said opening and in alignment with said shoulder and crimped portion, said gasket being under compression axially of the flange and acting to compress said portions, said shoulder, said washer, and said gasket into a stack, with said gasket sealing said opening, whereby fusing of the washer releases compression on said gasket enabling pressure fluid within the container to by-pass said valve body and escape from said opening externally of said flange

References Cited in the file of this patent

UNITED STATES PATENTS

711,162	Holbach	Oct. 14, 1902
900,763	McNutt	Oct. 13, 1908
1,142,902	McNutt	June 15, 1915
1,744,977	Lovekin	Jan. 28, 1930
1,921,809	Crain	Aug. 8, 1933
2,136,940	Ehbrecht	Nov. 15, 1938
2,305,286	Ward	Dec. 15, 1942
2,506,983	Williams	May 9, 1950
2,560,468	Morton	July 10, 1951
2,643,914	Reswick	June 30, 1953
2,647,721	Volpin	Aug. 4, 1953