United States Patent [19]

Cimber

[11] **3,809,095**

[45] **May 7, 1974**

[54] **ASPIRATOR NEEDLE INJECTOR**

[76] Inventor: **Hugo S. Cimber,** Neufeldstrasse 134, 3012 Bern, Switzerland

[22] Filed: **Oct. 15, 1969**

[21] Appl. No.: **866,634**

[52] **U.S. Cl.** **128/347,** 128/276

[51] **Int. Cl.** **A61b 17/34**

[58] **Field of Search** ..... 128/264, 276, 217, 218 D, 128/218 DA, 218 F, 297, 302, 347

[56] **References Cited**

UNITED STATES PATENTS

1,845,930	2/1932	Morrow	128/276
2,639,709	5/1953	Volgenall	128/276
3,064,650	11/1962	Lewis	128/218 F
3,538,916	11/1970	Wiles	128/217

FOREIGN PATENTS OR APPLICATIONS

771,890	10/1934	France	128/276

OTHER PUBLICATIONS

The References cited in S.N. 719,659 are incorporated here by reference.

Primary Examiner—Charles F. Rosenbaum
Attorney, Agent, or Firm—Ostrolenk, Faber, Gerb and Soffen

[57] **ABSTRACT**

A disposable sterilizable aspirator needle and operating mechanism therefor constituting an improvement of the device shown in Application Ser. No. 719,659, filed Apr. 8, 1968, now U.S. Pat. No. 3,580,255 in which a hollow disposable needle is supported in a hollow barrel for controlled spring loaded injection into the body for a predetermined distance. The barrel is secured to a pistol grip and the hollow needle is secured to a plunger in the pistol grip which is spring biased toward the injecting position and retained against movement under the spring bias by a latch mechanism which may be manually released. The needle is fully recessed in the barrel so that the barrel end may be placed against the body at the appropriate location and is extruded under the spring bias from the barrel end on release of the latch. The hollow needle may, as required, receive a catheter and a catheter stiffening wire.

2 Claims, 3 Drawing Figures

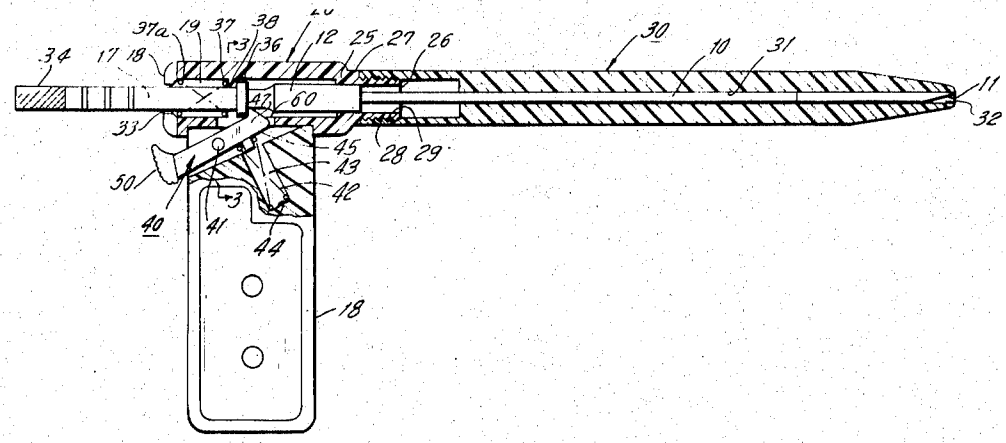

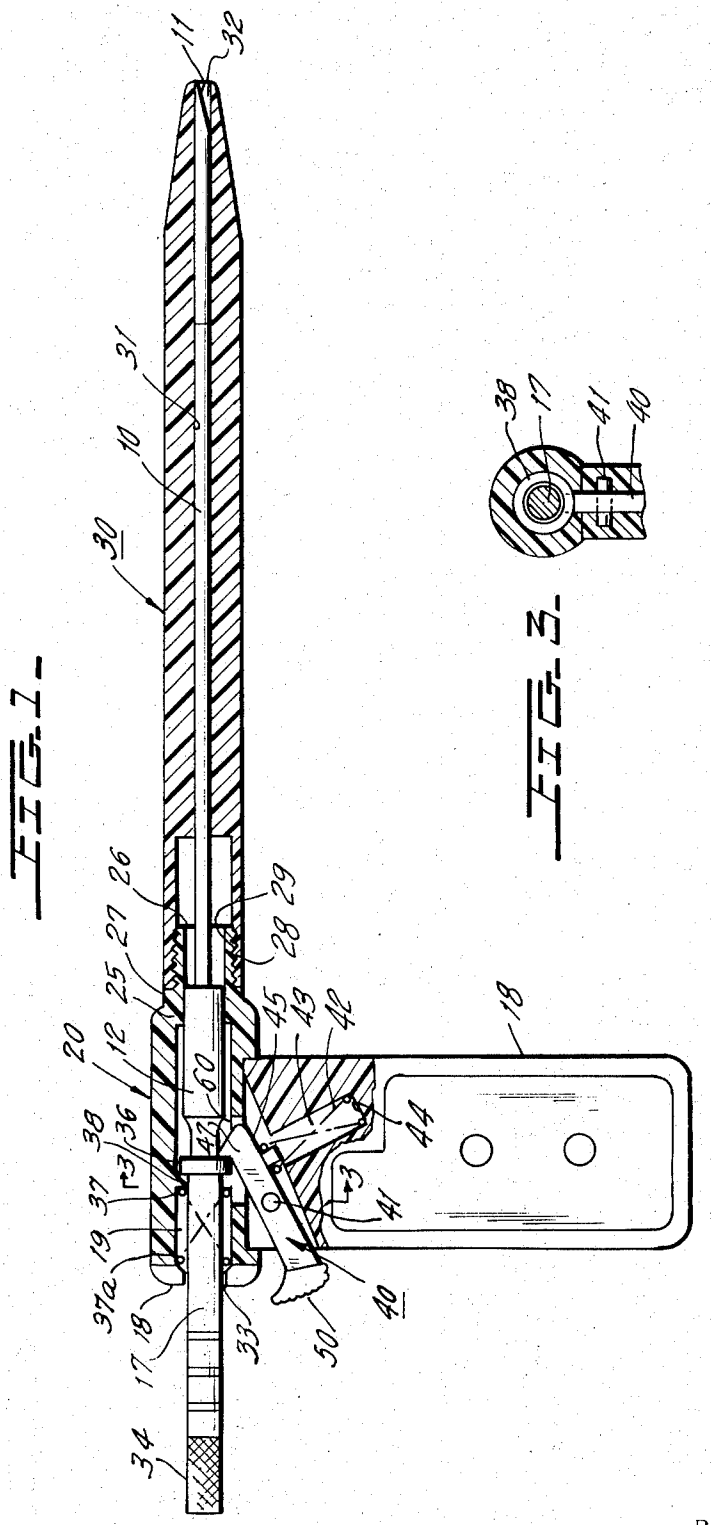

FIG. 1.

FIG. 3.

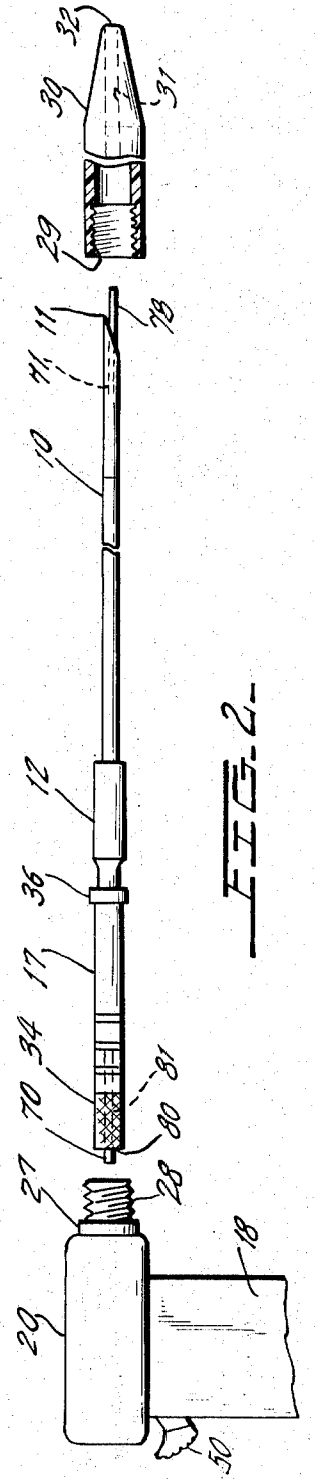

FIG. 2.

INVENTOR.
HUGO S. CIMBER

BY

Ostrolenk, Faber, Gerb & Soffen
ATTORNEYS

ASPIRATOR NEEDLE INJECTOR

This invention constitutes an improvement over my applicaton Ser. No. 719,659, filed Apr. 8, 1968, now U.S. Pat. No. 3,580,255, and relates to aspirators for collecting body fluids from body cavities, more specifically, an operating mechanism for a hollow needle to control the movement of the hollow needle into the body and prevent excessive penetration. In the said prior application for patent, I have disclosed an aspirator device in which the movement of a hollow needle into the body and a body cavity is controlled by a spring loading arrangement and by a plurality of latches. In my present invention I provide a simplified form of operation for the hollow needle wherein the hollow needle is essentially operated by a pistol grip trigger mechanism comprising a barrel removable from the pistol grip and fully enclosing the needle when the needle is in a retracted position. The needle is connected to a hollow plunger in the pistol grip mechanism, the plunger being spring biased in a direction to eject the end of the needle from the end of the barrel. The needle and plunger may be a single integrated unit or may be separate members connected together. A latch mechanism is provided to hold the plunger in the retracted position with the needle just inside the end of the barrel. The end of the barrel is so arranged that it may be located at the appropriate portion of the body and slightly pressed in toward the body. When the latch mechanism is released the spring loading on the plunger drives the plunger and the needle which is removably secured thereto into the body. The travel of the plunger is controlled so that the needle will have a controlled movement into the body for a predetermined distance. While the needle is still on the mechanism a catheter may be inserted through the plunger and in the needle for various purposes including the aspiration of body fluid. The catheter may have a control wire which is pre-bent or pre-curved to control the direction of the catheter portion which leaves the hollow needle to permit the catheter to aspirate fluid from the proper portion of the particular body cavity into which the catheter is then extended. The stiffening wire may then be removed with the catheter and needle in place and fluid from the body cavity may then be aspirated.

The primary object of this invention is, therefore, to provide a simplified means for causing a hollow needle to penetrate a body into a body cavity, to control the depth of penetration and to so arrange the operating means for operation of the needle that catheters, catheters with stiffening wires or other aspirators may be passed through the hollow needle into the body cavity and so that fluid or other materials may be withdrawn as required from the body cavity.

These and other objects of this invention will become apparent from the following description and drawings in which:

FIG. 1 is a side elevation partly broken away showing my novel needle operating mechanism.

FIG. 2 is an expanded view of the elements of FIG. 1 demonstrating the operation of the device.

FIG. 3 is an end view partly in section taken on lines 3—3 of FIG. 1 looking in the direction of the arrows.

Referring now to FIGS. 1 and 2, my novel device includes a hollow needle 10 having an appropriate penetrating conformation at its point 11 so that it may readily enter the body. The needle may be plastic and its point element 11 may be steel. The needle at the end opposite its point 11 is attached to the hollow bushing or carrier 12 which in turn is secured to the hollow plunger 17. The plunger 17, the bushing 12 and needle 10 with its point 11 may be a single integrated element which may be handled as a unit and inserted as a unit into the pistol grip device. The plunger 17 is carried by a pistol grip handle 18 having a hollow upper housing 19 defined by a top wall 20 which preferably is integral with the side walls 21 which in turn are preferably an integral continuation of the handle 18. If in assembling the device it becomes difficult to make all of the elements integral the housing 19 and its walls 20 and 21 are connected to the handle 18 in such manner as to prevent any recesses or pockets of contamination and to permit a simplified and thorough sterilizing of the entire unit. For this reason the handle 18 and its associated elements are made of a material, preferably a heat resistant plastic, which will resist the heat of sterilization. Since the plunger 17 and the needle 10 are preferably a single unit which may be removed from the housing and inserted therein, the needle element and its support may be separately sterilized; this may obviate the need for making the housing of sterilizable material.

The housing 19 is provided with an internal bushing 25 axially aligned with the opening 26 at the front of the housing and the collar 27 which surrounds the opening. The collar 27 is provided with a threaded bushing 28, the said bushing 28 being externally threaded. The thread of the bushing 28 will thus receive the internal threaded countersunk portion 29 of the barrel 30. The barrel 30 is provided with an axial tube 31 which supports and guides the needle 10. The said axial tube 31 continues to an opening 32 at the front end of the barrel through which the needle point 11 may be extended.

The plunger 17 extends through the rear opening 33 of the housing which is aligned with the bushing 25 and may be provided with the knurled section 34 which may form a knob. The plunger 17 also is provided with a latching collar 36. A compression spring 37 is captured between the collar 36 on the bushing and the internal surface 37 of the rear wall of the housing 19. The spring 37, therefore, is arranged to drive plunger 17 into the housing to a distance determined by the maximum extension of spring 37. The spring 37 is provided with a collet 38 which forms a bearing surface against collar 36.

The plunger may be maintained in its retracted position compressing the spring 37 between the collar 36 and the internal surface 38 of the rear of the housing 19 by a latch 40 rotatably supported on the pin 41 carried within the housing and biased toward latching position by the compression spring 42 carried in the recess 43 of the handle 18. The compression spring 42 is compressible between the bottom wall 44 of the recess and the bottom surface 45 of the latch 40. The compression spring 42 thus biases the latch so that the latching element 47 of the latch 40 engages the front surface of the collar 36 of plunger 17 and thereby prevents the plunger from moving in response to the urging of its compression spring 37.

The latch 40 extends beyond the handle 18 and is provided with an external operating extension 50 to rotate the latch member 40 clockwise around the pin 41

to remove the latch detent 47 from the edge of collar 36 thereby permitting the compression spring 37 to drive the plunger and needle inwardly. This will serve to expel the end 11 of needle 10 which is connected to the plunger 17 rapidly and positively from the opening 32 at the end of the barrel 30 by a controlled distance determined by the maximum extension of spring 37.

Thus, the actual travel of the needle 10 will always be constant but the degree of penetration of the needle into the body from the opening 32 of the barrel will be determined by the length of the needle-plunger combination chosen.

In operation, therefore, the user of the device will, with the barrel 30 removed, insert the needle-plunger, 10–17, through collar 27, the knurled section 34 of the plunger entering first and push it in until the knurled section 34 emerges at the other end and collar 36 passes position 60 of latch 40 and is captured by latch element 47; the collar 36 thereby also compresses spring 37. The device is thus cocked and ready to operate. The barrel 30 will then be screwed on to the threaded extension 28 in order to protect the needle and provide an appropriate guide therefor. The end of the barrel 10 having the opening 32 is then placed against the body at the appropriate location. The extension 50 of latch 40 is then rotated upwardly by the thumb to rotate the latch in a clockwise direction thereby releasing the latch surface 47 from the collar 36. The compression spring 37 will now drive the plunger with the needle attached rapidly toward the needle extending position thereby driving the needle into the body with a rapid, predetermined controlled stroke so that the needle end may reach the appropriate position in the body or in the body cavity as required.

A catheter 70 may then be passed through the plunger-needle combination from the end 34 through the needle and into the body or body cavity. If desired, a precurved wire stiffener 71 may be located in the catheter longitudinally when the catheter is passed through the needle 10 so that as the catheter end 78 leaves the end 11 of the needle 10 it may be arced or curved in a predetermined direction. The wire 71 may thereafter be removed and the catheter 70 may be utilized in connection with any device including an aspirator.

When the needle is mounted in the device the catheter 70 may be prepositioned in a portion of the needle by being passed through the opening 80 in the knob 34 of plunger 17 and the central opening 81 of the plunger 17. After the needle has penetrated the body the catheter may then be moved the appropriate distance through the needle into the cavity with or without the wire 71 as required. The wire 71 may then be withdrawn and the catheter 70 may be used without removing the operating mechanism or taking it apart as above described.

By this means, therefore, I have provided a simplified mechanism for operating a hollow needle for a controlled distance into a body and have provided a device which may readily be assembled and disassembled for sterilization of the entire mechanism and replacement of the needle and its plunger.

Since it is obvious that many variations and modifications of my novel device should be clear to those skilled in the art, I prefer, accordingly, to be bound not by the specific disclosures herein contained but only by the appended claims.

I claim:

1. An aspirator needle operating mechanism for cooperating with a tubular aspirator needle having a sharpened end for entry into the body and an opposite end having mounting means, said operating mechanism comprising

a housing having a front wall, rear wall and bottom wall; an opening in the rear wall; a bushing on said front wall extending into the housing and axially aligned with said opening in said rear wall;

a plunger slidably extending through said rear wall and into said bushing; a portion of said plunger extending from said rear wall;

biasing means for moving said plunger into said housing and bushing; a latch element on said plunger;

a latch member on said housing engaging said latch element on said plunger and restraining said plunger against the operation of said biasing means; means for releasing said latch member to permit said plunger to move axially under the influence of said biasing means from the restrained position to an advanced position;

and a needle secured to said plunger;

said plunger being provided with a through tubular passage communicating with the tubular needle

in which the front of the housing is provided with a collar having an opening axially aligned with the bushing; a barrel having an axial tubular opening for receiving and supporting the aspirator needle; said barrel being removably securable to the collar with its axial tubular opening aligned with the bushing and plunger.

2. An aspirator needle operating mechanism for cooperating with a tubular aspirator needle having a sharpened end for entry into the body and an opposite end having mounting means, said operating mechanism comprising

a housing having a front wall, rear wall and bottom wall; an opening in the rear wall; a bushing on said front wall extending into the housing and axially aligned with said opening in said rear wall;

a plunger slidably extending through said rear wall and into said bushing; a portion of said plunger extending from said rear wall; a knob on said plunger;

biasing means for moving said plunger into said housing and bushing; a latch element on said plunger;

a latch member on said housing engaging said latch element on said plunger and restraining said plunger against the operation of said biasing means; means for releasing said latch member to permit said plunger to move axially under the influence of said biasing means from the restrained position to an advanced position;

and a needle secured to said plunger;

the front of the housing being provided with a collar having an opening axially aligned with the bushing; a barrel having an axial tubular opening for receiving and supporting the aspirator needle; said barrel being removably securable to the collar with its axial tubular opening aligned with the bushing and plunger;

the tubular passage of the plunger and knob, the bushing and the tubular portion of the needle supported in said tubular passage of said barrel are aligned to receive and pass a catheter therethrough.

* * * * *