United States Patent [19]

Crilly

[11] **3,832,999**

[45] **Sept. 3, 1974**

[54] **STERILE DRAINAGE ASSEMBLIES**

[76] Inventor: **Robert R. Crilly,** 47 Normark Dr., Thornhill, Ontario, Canada

[22] Filed: **June 22, 1972**

[21] Appl. No.: **265,246**

[52] **U.S. Cl.** **128/275**

[51] **Int. Cl.** **A61f 5/44**

[58] **Field of Search** ..... 417/274, 275, 277, 448, 417/472, 473, 478, 479; 128/275-278, 294, 295, 214 F, 145.5, DIG. 24

[56] **References Cited**

UNITED STATES PATENTS

3,411,502	11/1968	Hofstra et al.	128/214 B
3,417,750	12/1968	Carson	128/278
3,463,159	8/1969	Heimlich	128/275
3,529,599	9/1970	Folkman et al.	128/275
3,542,026	11/1970	Bledsoe	128/270
3,588,293	6/1971	Morales	417/479

Primary Examiner—Charles F. Rosenbaum
Attorney, Agent, or Firm—Cecil C. Kent; Kerry M. Hill

[57] **ABSTRACT**

For use in sterile drainage procedures, particularly in medicine and surgery and designed for insertion in the fluid communication line between a catheter and a sink, a rigid-walled jacket enclosing a dry chamber is introduced. This chamber is provided with upstream and downstream end intake and discharge ports respectively and contains a downstream-opening elongated elastomeric flutter valve secured to the upstream chamber-end in communication with said intake port. Manually operable pump means co-axial with the jacket and on the upstream side thereof also communicate with the said intake port. A cap may be integrally secured to the downstream end of the jacket to seal the intake aperture of an elastomeric collapsible sink in the form of a drainage container having a rigid upper wall in which said aperture is located, such rigid upper wall maintaining the upper parts of the collapsible side walls spaced apart to facilitate fluid reception.

3 Claims, 2 Drawing Figures

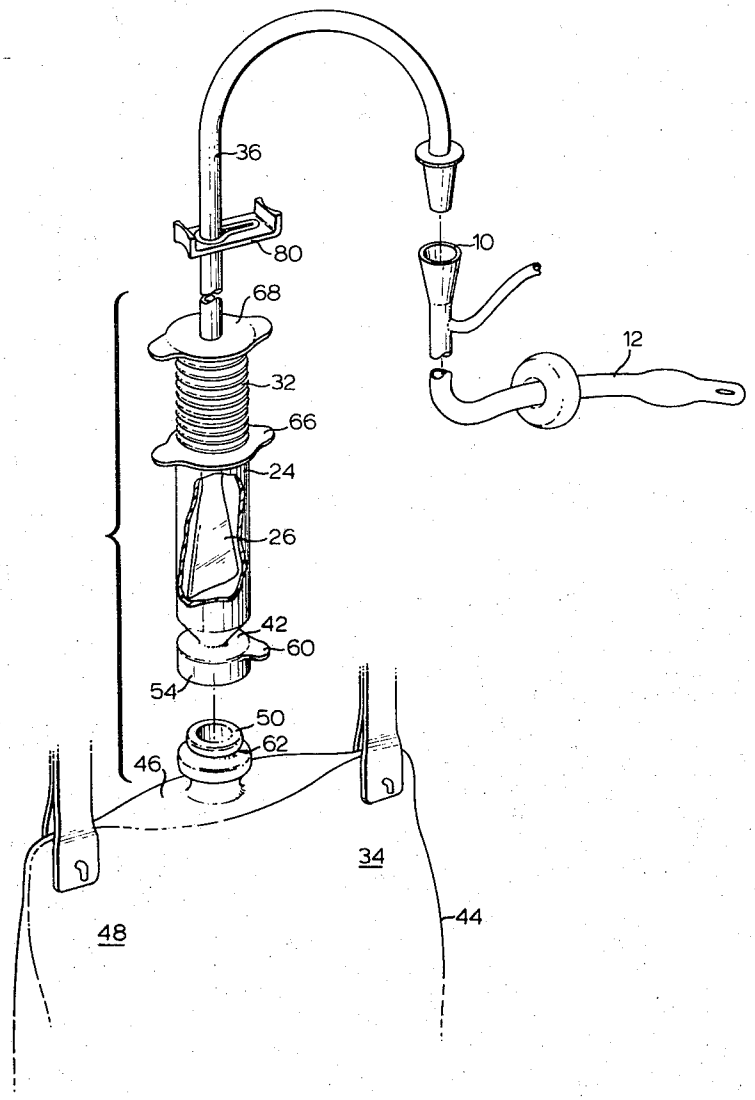

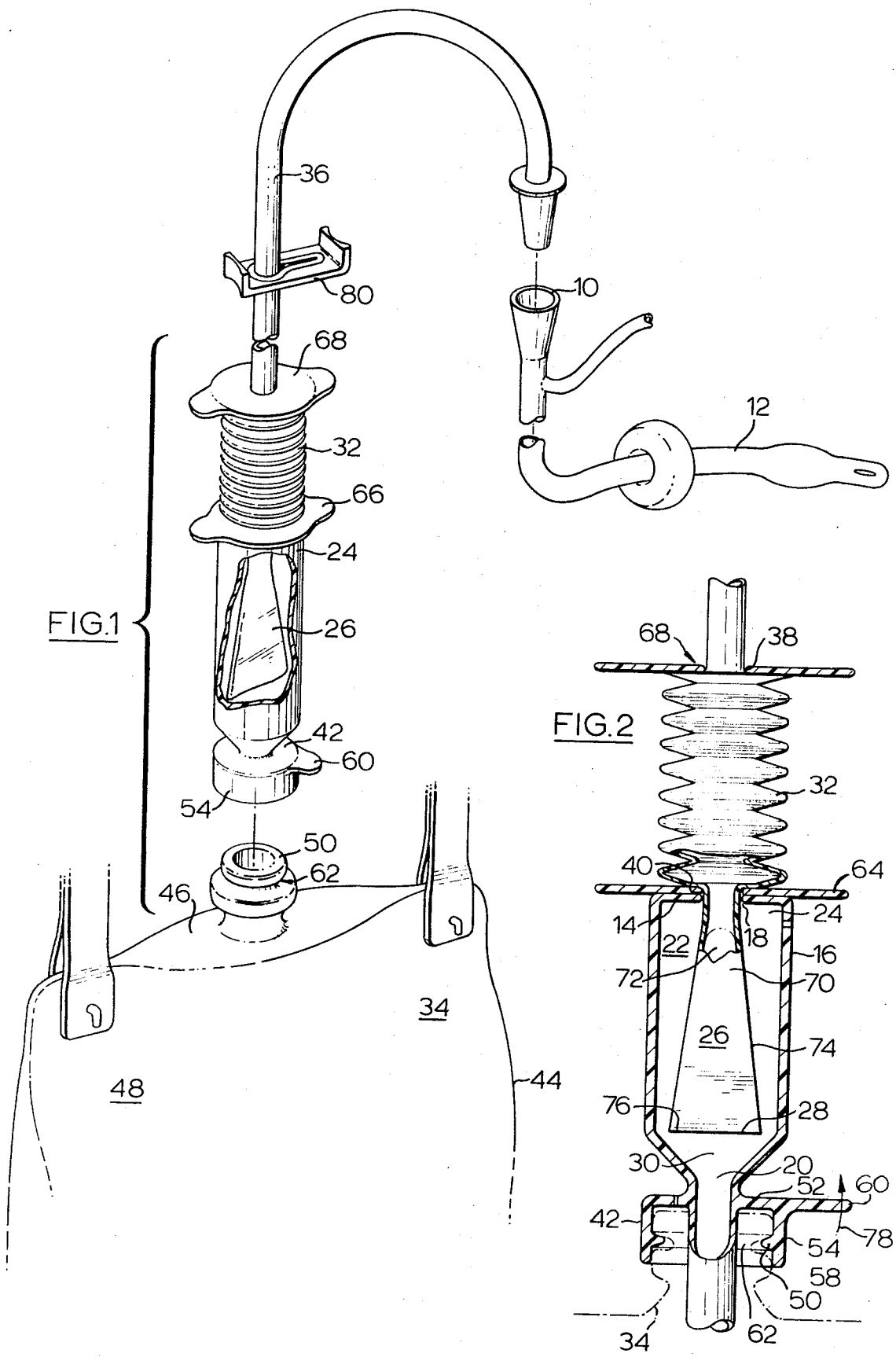
36
80
10
68
12
32
66
24
26
42
60
54
50
62
46
34
48
44

FIG.1

68
38
32
40
64
14
24
22
18
16
72
70
26
74
76
28
30
20
52
60
42
78
54
58
50
34
62

FIG.2

STERILE DRAINAGE ASSEMBLIES

The following disclosure contains a correct and full description of the invention and of the best mode known to the inventor of taking advantage of the same.

SUMMARY DESCRIPTION

This invention is primarily, essentially, and as considered in isolation, a rigid-walled cylindrical jacket enclosing a chamber containing a flutter-valve of known design spaced from the surrounding inner wall surface and secured to the upper downstream end of the jacket. More generally the invention comprises the jacket and valve just stated in combination with other known parts of a sterile drainage assembly, embodying particularly a catheter and tubing extending between said catheter and the upstream end of said jacket.

The invention further includes pump-means in the form of an annular corrugated collapsible cylindrical pump element adjacent and in relatively rigid co-axial communication between the downstream end thereof and the upstram end of said jacket with the tubing connected to the upstream end of the pump. Finally, the invention comprises the aforesaid combination together with a novel drainage container and cap therefor wherein the cap is secured integrally to the downstream end of said jacket, and means are provided for maintaining the collapsible walls of the elastomeric container spaced apart for better fluid reception and easy cap attachment so that in the conclusion a novel assembly is presented wherein said jacket and pump element are seen to project relatively rigidly upwards from said container (which of course may also be a rigid structure).

DESCRIPTION OF THE PRIOR ART

The known art is embodied in the U.S. Pat. No. 3,417,750 issued Dec. 24, 1968 to R. Carson. It embodies a flutter-valve containing chamber but one in the form of a suction-inducing flexible aspirator, hence a finger-pinchable pump-means connected by tubing to a catheter.

ADVANTAGES OF THE PRESENT INVENTION

Since it is known that bacteria will not climb a dry wall the line of communication in the present assembly may be safely broken below the jacket forming part of same and without fear of invasion by said bacteria into the tubing above the pump-means and hence into the catheter.

A further advantage of the present invention resides in the relatively rigid connection of the jacket and pump-means whereby one hand only is sufficient to perform the necessary gentle pumping action if necessary. In any event such semi-rigid connection is positive, easy and convenient, not excessively flexible and "unmanageable" as many assemblies are which depend upon rubber tubing connections.

A further advantage of the present invention resides in its easy and convenient rigidity to the hand in the matter of attachment and detachment to and from the associated fluid container with a capping arrangement and recipient intake mouth obviating any need for twisting action.

A further advantage lies in that if instead of an elastomeric container as herein described a rigid container is employed, it will become apparent as this specification proceeds that by the provision of the described cap which is integral with the downstream end of the jacket, a relatively stiff upstanding an easily manipulated assembly of jacket and pump is achieved with a minimum of serpentine unsupported hose-connected components.

With the foregoing in view, and such other or further purposes, advantages or novel features as may become apparent from consideration of this disclosure and specification, the present invention consists of the inventive concept comprises, embodied, embraced, or included in any method, process, construction, composition, arrangement or combination of parts, or new use of any of the foregoing which may herein be exemplified in one or more specific embodiments of such concept, reference being had to the accompanying drawings in which:

FIG. 1 is a perspective representation of the present invention shown associated with a Foley indwelling catheter.

FIG. 2 is an enlarged fragmentary cross-sectional elevation of the sterile jacket and associated pump-means.

In the drawings, like characters of reference designate similar parts in the several Figures.

CLAIM-CONSONANT DESCRIPTION

Describing initially the subject-matter hereof in terms generally consistent with those by which the same is defined and claimed as an invention herein this invention consists of the means for and method of draining and drainage particularly but not necessarily as applied to medicine, of connecting to the downstream end **10** of a catheter **12** the upstream end **14** of a rigid walled jacket **16** having upstream and downstream intake and discharge end ports **18** and **20** respectively enclosing a chamber **22** having secured to the upstream interior end **24** thereof for fluid communication with said catheter an elongated elastomeric one-way flutter valve **26** spaced from the surrounding jacket wall and openable as at **28** toward the downstream end **30** of said jacket, and means **32** connected to one of said ports for pumping fluid through said jacket from a source (the catheter) to a sink **34.**

The pumping means **32** are on the upstream side of jacket **16** being in the line of communication **36** between catheter and jacket. The pumping means consist of an annularly corrugated and collapsible generally cylindrical element having upstream and downstream intake and discharge ports **38** and **40** respectively. As shown FIG. **2** the jacket and pump means are in generally cylindrical and co-axially directly connected essentially unitary relationship.

The invention also includes a cap **42** for a sink **34** in the form of an elastomeric drainage container **44** of normally flat collapsed configuration characterized by having an upper wall portion **46** at right angles to the major plane of the container when collapsed, said upper wall portion being rigid relative to the collapsible parallel side walls **48** of the container, the said wall portion extending upon diametrically opposite sides of an intake aperture formed in the upper wall portion bisected by the aforesaid major axial plane, an upwardly projecting mouth **50** being provided around said aperture.

The cap for the drainage container **44** is integral with the downstream end **30** of jacket **16.** Said cap is essentially comprised of a cover plate **52,** an annular skirt **54** depending from the cover plate, an inwardly projecting

flange **58** on the inner surface of said skirt and a manually operable upwardly yieldable out wardly projecting tab **60** on one side of the cap. The flange **58** loosely occupies the external annular groove **62** in the mouth **50**, to retain the cap connected to container **48**. An upward pry on tab **60** separates the cap from mouth **50** due to there being sufficient resiliency in the cap, the mouth or both to permit the necessary deformation and return.

COMPLETE DESCRIPTION

In connection with the principal novel concept of the present invention which resides (a) in the provision of the rigid jacket housing a dry wall chamber **22** thereby providing, in the context described, a sterile barrier, and (b) the provision, in combination with such a jacket of a pumping means **32** permanently "in the line" between a source (the catheter) and a sink (the container **34**), and noting expressly at this point that the pump means although at present appearing preferably to be positionable between the jacket and the catheter could apparently also be placed on the downstream side of the jacket, between the jacket and the sink, it will be seen by best reference to FIG. **1** that jacket **16** is cylindrical and that valve **26** extends for the major portion of the chamber **22** therewithin. By reference to FIG. **2** it will be seen that the jacket **16** and the pump means **32** are separated by the plate **64** which is provided with the pair of diametrically opposed and outwardly projecting ears **66**. The upstream end **68** of the pump means **32** is provided with a similar plate **68** and by this means it will be apparent that the collapsible and cylindrical bellows-type pump can be gently squeezed as between finger and thumb or grasped with the whole hand while a little pressure is applied against one end it being realized that in general only a very gentle manipulation of the pump will be employed to extract blocking material such as blood clots from the catheter (or anywhere in the line) for the purpose of transferring same to sink **34**.

The jacket **16** and pump **32** will preferably be secured together at the junction between them represented by the plate **64** by whatever means are most conveneint having regard for the materials of choice. Thus the connection may be mechanical or may be adhesive. In any event it is desirable that these two parts, the jacket and the pump should be integral so as to preserve substantial co-axiality for greater convenience of manipulation and for greater convenience in attaching and detaching by way of cap **42** to and from the sink or fluid container **48**.

It is to be understood that the flutter valve **26**, apart from the dimensions chosen for use of the same in this particular instance, is conventional and consists of two interfacing relatively thin elastic surfaces **70** and **72** which are united along the edges **74** but separated along the downstream exit edge **76**. Thus the valve is a one-way valve and the edges of the elastic panels at **76** are normally in contact but are separated by the downward movement of fluid through the valve. Such fluid cannot return by this route however.

The sink **34** may of course be in the form of a rigid container having an aperture at the upper end thereof and a mouth such as mouth **50**. When using such a form of mouth in connection with a flexible drainage container **48** however such as is adapted to be strapped on to the limbs of the user, it is preferable that the upper wall **46** be horizontal and rigid to maintain the mouth **50** in this condition rather than being liable to droop over to one side. By being rigidly upstanding, the integrality of the jacket and the pump means **32** is much enhanced inasmuch as the cap **42** is, as shown in FIGS. **1** and **2** integral with the downstream end of the jacket **16**. Thus there is a stiff and upstanding relatively rigid relationship between the discharge aperture of the drainage container, the sterile barrier, and the pump means which, in medical and surgical uses makes for a highly desirable ensemble and one which can be very readily detached from the drainage container since it will be noted that no twisting is necessary with the arrangement of flange and groove **58** and **62** described, and the unity comprising the cap, the jacket or sterile barrier and the pump means **32** can readily be lifted up out of the fluid container **48** with a simple slightly distorting pry upon the tab **60**.

The conventional clip **80** is of course for occluding the tube **36** and holding a vacuum for any purpose desired upstream of said clip, as for example when detaching fluid container **48** to empty same.

Various modifications may be constructed or performed within the scope of the inventive concept disclosed. Therefore what has been set forth is intended to illustrate such concept and is not for the purpose of limiting protection to any herein particularly described embodiment thereof.

What is claimed is:

1. In the practice of sterile drainage employing in fluid communication a catheter and a sink, the invention which comprises in combination, a rigid walled jacket enclosing a chamber having an inlet and an outlet, an elongated elastomeric one-way flutter valve within said chamber spaced from the surrounding jacket wall and openable towards said outlet, pump means between said catheter and said jacket in fluid communication with said catheter and jacket for effecting vacuum assisted downstream fluid drainage from a source to said sink, said pump means having an outlet port extending into said chamber through said inlet, said valve being secured on said outlet port.

2. The invention according to claim **1** in which said jacket has an integral cap surrounding said outlet.

3. The invention according to claim **2** in which a drainage container is secured to said cap, said drainage container being predominently elastomeric of normally flat collapsed configuration but having an upper wall portion at right angles to its major axial plane when collapsed which is rigid relative to the collapsible parallel side walls of said container, said relatively rigid upper wall portion extending upon diametrically opposite sides of an intake aperture formed to said upper wall portion bisected by said plane, an upwardly projecting mouth around said aperture, said cap being attachable to said mouth.

* * * * *