United States Patent

Stosberg et al.

[15] **3,705,438**

[45] **Dec. 12, 1972**

[54] **LOCABLE RUNNERS**

[72] Inventors: **Herbert Stosberg; Horst Fleischmann,** both of Wermelskirchen-Tente/Rhineland; **Gunter Reinhards,** Wermelskirchen/Rhineland; **Siegfried Engels,** Wermelskirchen, all of Germany

[73] Assignee: **Firm Tente-Rollen Gesellschaft mit beschrankter Haftung Companie,** Wermelskirchen-Tente/Rhineland, Germany

[22] Filed: **Nov. 9, 1970**

[21] Appl. No.: **88,005**

[30] **Foreign Application Priority Data**

April 29, 1970 Germany .....G 7 016 058.6

[52] **U.S. Cl.**.....**16/35,** 188/1

[51] **Int. Cl.** **B60b 33/00**

[58] **Field of Search**.....16/35, 35 D, 43

[56] **References Cited**

UNITED STATES PATENTS

3,065,495 11/1962 Hefferon et al.....16/43

FOREIGN PATENTS OR APPLICATIONS

1,427,040 12/1965 France.....16/35

Primary Examiner—Bobby R. Gay
Assistant Examiner—Doris L. Troutman
Attorney—Burgess, Dinklage & Sprung

[57] **ABSTRACT**

A runner has a conventional back-set bearing and bearing pivot. An axially movable pin passes through the pivot to operate retaining components in the runner fork to lock the wheel against running and/or swivelling movement. The pin is operated by a trip cam housed in a casing which surrounds the pivot and locking pin. The casing may be made in two half-shells and has a lower beading which engages in a groove of the bearing pivot. The casing forms an attachment plug whereby the runner can be fitted to a foot of an article of furniture.

10 Claims, 5 Drawing Figures

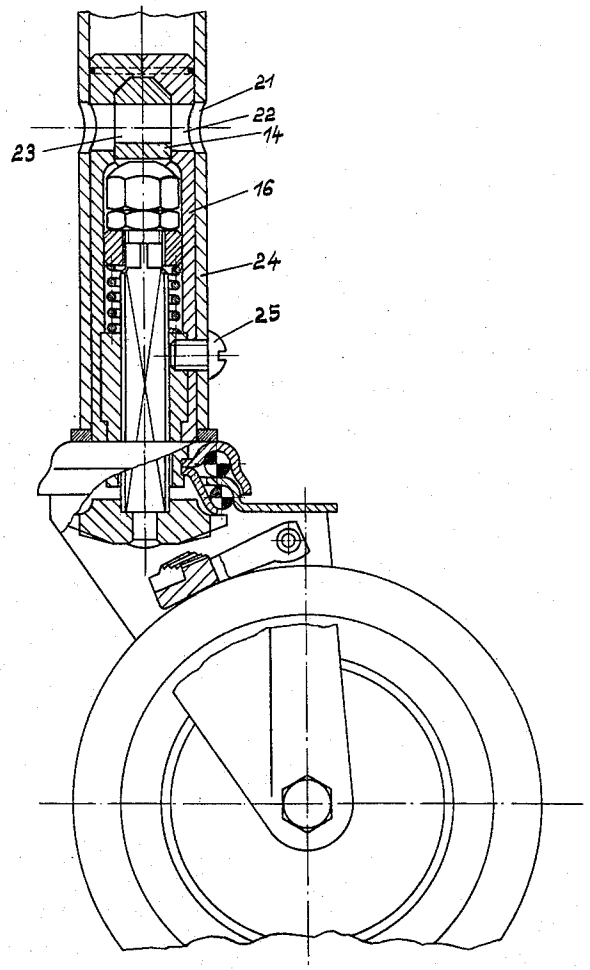

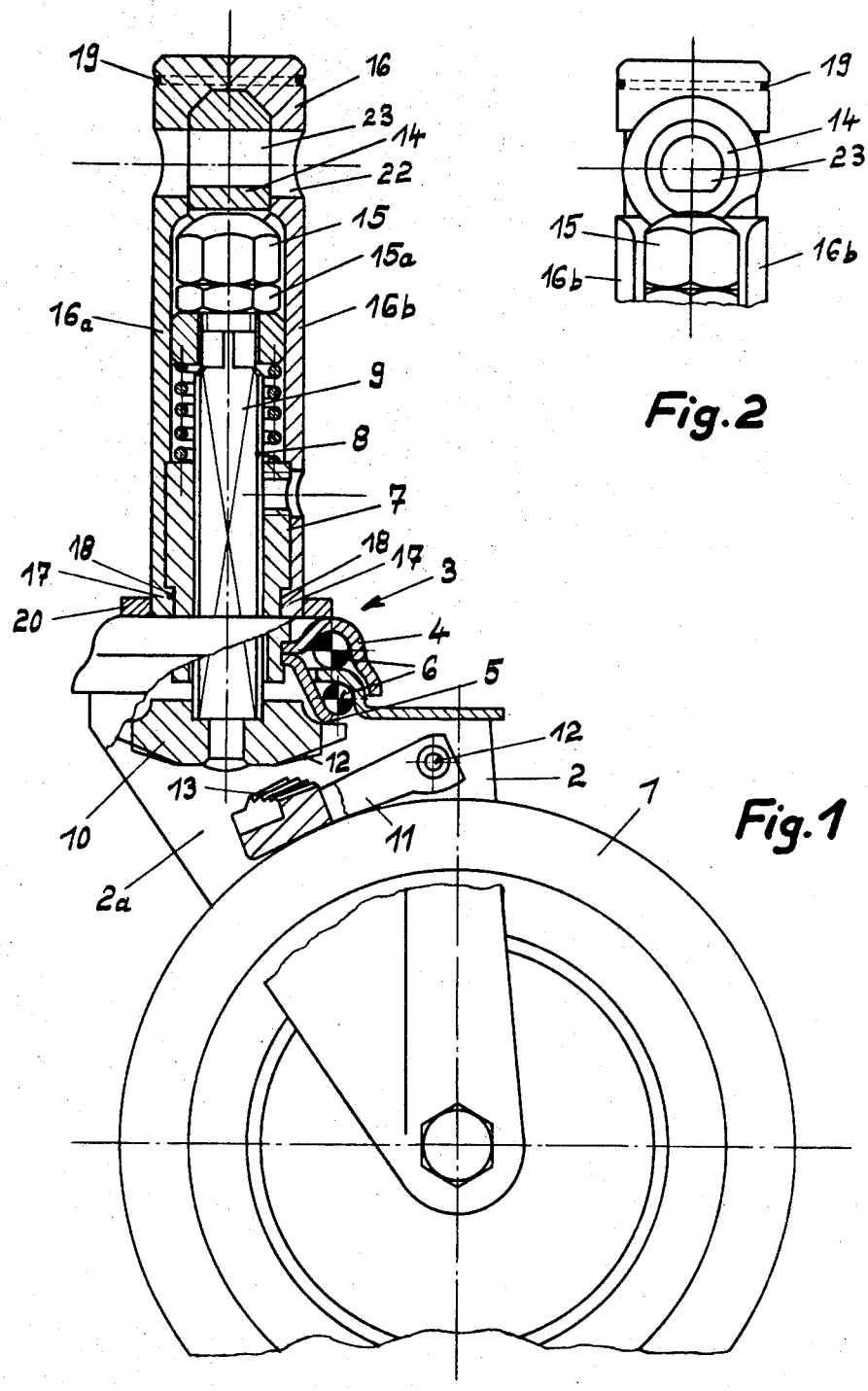

Fig.1

Fig.2

INVENTORS:
Herbert Strasberg, et al.
ATTORNEYS:
Burgess, Dinklage & Sprung

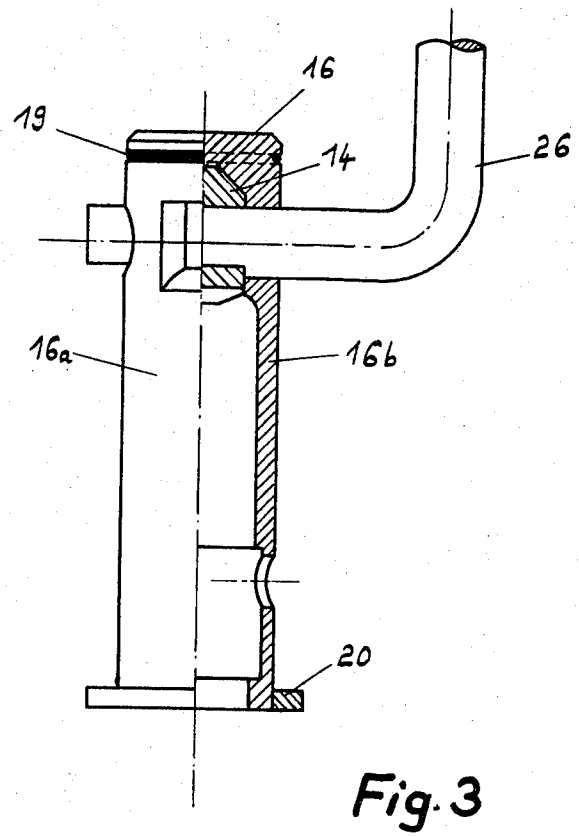

Fig. 3

INVENTORS:
Herbert Stosberg, et al
ATTORNEYS:
Burgess, Dinklage & Sprung

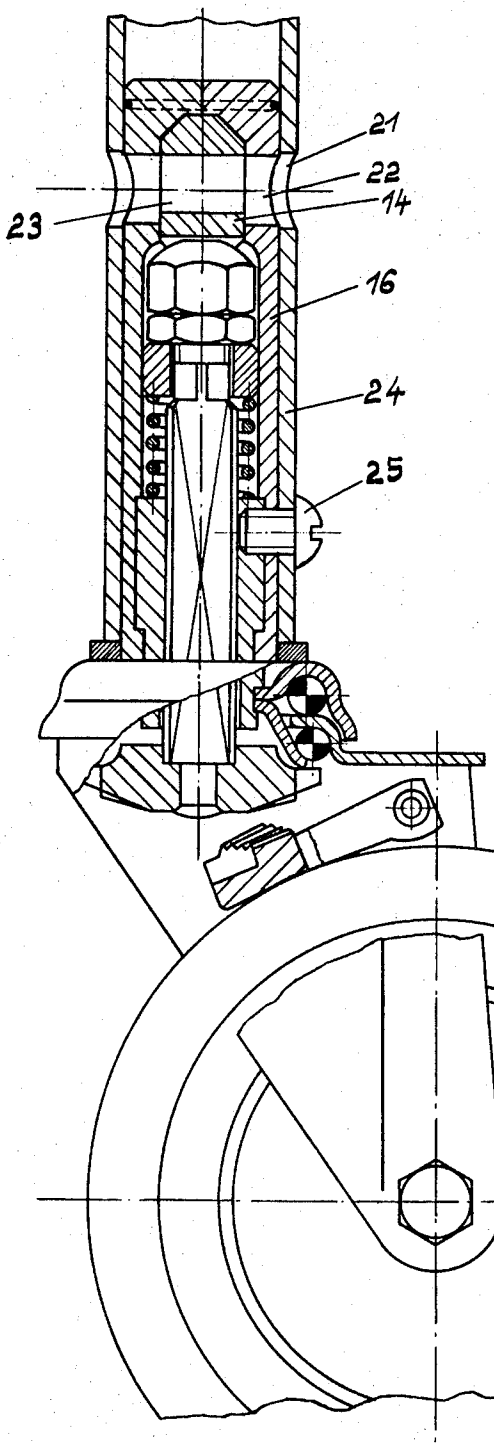

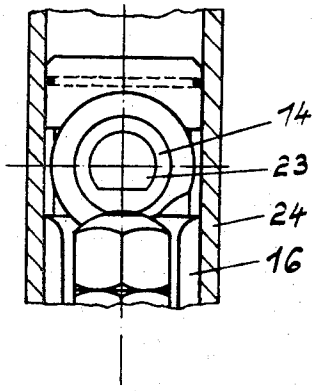

Fig. 5

Fig. 4

INVENTORS:
Herbert Stosberg, et al
ATTORNEYS:
Burgess, Dinklage & Sprung

LOCABLE RUNNERS

This invention relates to a runner, in particular to a castor, with a locking device for arresting the running and/or swivelling movement of the wheel, which castor has a back-set bearing pivot and back-set bearing through which passes an axially movable locking pin, on which pin a trip cam or the like acts. By the axial displacement of the locking pin passing through the back-set bearing pivot, retaining components, arranged in the hollow of the runner fork, are brought into engagement with one another and thus effect the locking of the rotary and/or swivelling movement of the wheel.

With such runners it is in general a question of centrally lockable castors, which are especially intended for articles of furniture such as movable sick or hospital beds. The centrally lockable castors are generally actuated by means of a central locking device via rods or cable controls, which control trip cams or other members such as eccentrics, wedge or key systems for example, as disclosed in German Gebrauchsmuster Specification 1 928 153.

In order to achieve trouble-free operation it is necessary for these rod or shift systems to be incorporated with high precision into the frame of the bed or other article of furniture. However this is associated with difficulties in production because of the usual welded tubular construction of such frames.

Since the trip cams or other actuating members for acting on the locking pins of the locking rollers are component parts of the frame of the bed or other article of furniture, and since tolerances must be provided for this and for the locking rollers, a uniform locking of all the rollers of a sick bed or other article of furniture is not always ensured.

It is often necessary therefore to correct the set dimension or to adjust it to the particular tubular foot of the bed or article of furniture, in order to achieve the optimum locking of all runners. These setting operations must therefore be effected on the finished bed or other article of furniture when the runners are fastened in the tubular feet of the bed or article of furniture by means of their back-set bearing pivot, because the trip cams or other actuating members for acting on the axially movable locking pin belong to the bed or furniture frame. These subsequent adjustment operations are very time-consuming and require specialized knowledge.

The invention obviates these disadvantages and provides a runner, in particular a castor, which even during assembly of the runner, can be accurately adjusted from the first so that subsequent adjusting operations, after the runner has been mounted in the frame of the bed or other article of furniture frame, is no longer necessary.

According to the invention there is provided a runner, in particular a castor, with a locking device for arresting the running and/or swivelling movement of the wheel, said runner having a back-set bearing and pivot, an axially movable locking pin passing through said bearing and pivot and a trip cam or the like arranged to act on said locking pin, wherein the trip cam or the like is arranged in a casing which encloses said pivot and the locking pin over substantially their entire extent, and which is a component part of the runner and forms a substantially smooth attachment plug by which the runner can be fitted into a tubular foot or the like.

Since the trip cam or the other actuating member is then a component part of the runner, the runner can be adjusted, during its assembly, in respect of the correct co-operation of the trip cam and locking pin and is thus ready for installation, so that the tolerances of the bed frame or the like can no longer have a disadvantageous effect.

A particularly advantageous further development of the invention is characterized in that the trip cam or the like is supported in a casing composed of two half shells, which casing encloses the back-set bearing pivot and the locking pin substantially over their entire extent and which is a component part of the runner and forms the substantially smooth attachment plug for the fitting of the runner in a tubular foot of the like.

The invention offers among others the advantage that the wall thickness of the casing or of the casing-half shells pushed over and enclosing the trip cam or the like can be varied in order to be able to use one and the same runner for fitting in tubular feet of different inner diameters.

In order that the casing composed of the two half-shells, in the upper part of which the trip cam or the like is accommodated and supported, is fixed firmly on the back-set bearing of the runner, the two casing shells can be provided at their lower end with an inner beading with which they engage in an outer groove of the back-set bearing pivot.

The two casing shells can be held together at their upper and lower ends by rings. Thus the lower retaining ring can act simultaneously as a tube end ring of the tubular foot.

The casing or the two casing shells can consist of metal or plastics or other suitable materials. Their construction as die-cast metal components is particularly advantageous. Preferably the two casing shells consist of zinc die-castings.

The trip cam supported in the casing or two casing shells has a non-circular bore preferably with a flat on one side, in which the operating lever or the shift linkage can be inserted force-lockingly and fixed so as to rotate therewith, when the runner is fixed in the tubular foot of the bed frame of the like. The bore of the trip cam can also however have a different profile which allows a control lever or shift linkage to be accommodated force-lockingly and fixed so as to rotate therewith.

A specific embodiment of the invention in connection with a centrally lockable castor for sick beds will now be described by way of example with reference to the accompanying drawing, in which:

FIG. 1 shows the castor ready for installation, in section;

FIG. 2 shows a detail of the arrangement of the trip cam in the casing, in lateral section;

FIG. 3 shows only the casing of FIG. 1 composed of two half-shells, with the trip cam supported therein and with a control lever inserted, partly in section;

FIG. 4 shows the castor of FIG. 1 after its installation in a tubular foot, in section; and

FIG. 5 shows the arrangement of the trip cam in the casing after the insertion of the casing in the tubular foot, in lateral section.

As shown in the drawings, the castor comprises a runner fork **2** holding a wheel **1** and a back-set bearing **3**, which here is a swivel bearing and is composed of an outer ball cup **4**, an inner ball cup **5** and balls **6**. A back-set bearing pivot **7** is fastened to the back-set bearing **3** in the usual manner by means of facetting and flanging. A locking pin **8** is supported axially movably in the back-set bearing pivot **7**, which pin is prevented from rotating by a lateral flat **9**. The locking pin **8** is mushroom-shaped and is provided at its lower end portion with a mushroom head **10**, which can move axially together with the locking pin. In the hollow **2a** inside the fork **2** a pawl **11** is pivotably supported by means of a spindle **12**. Both the mushroom head **10** of the locking pin **8** and the pawl **11** have coinciding conical ratchet teeth **12** and **13**, which mesh with one another when through actuation of the central locking device the trip cam **14** is rotated and thus presses on a cap nut **15** and consequently pushes the locking pin **8** downwards in its axial direction, in order to force the pawl **11** against the wheel **1**. Now the wheel **1** is arrested both in its swivelling movement and its rotary motion and thus the castor is completely locked.

The trip cam **14** is supported in the upper portion of a casing **16**, which here encloses the back-set bearing pivot **7** and the back-set bearing pin **8** over their entire extent. The casing **16** is a component part of the castor and forms an outwardly smooth attachment plug, by means of which the castor can be fitted into a tubular foot **24** (FIG. **4**).

The casing **16** consists of two half-shells **16*a*** and **16*b*** which here enclose over their entire extent the back-set bearing pivot **7** and the locking pin **8**. The casing shells **16*a*** and **16*b*** have at their lower end an inner beading **17**, with which they engage in an outer groove **18** of the back-set bearing pivot **7** and they are thereby connected to this latter axially immovable. At their upper and lower ends the casing shells **16*a*** and **16*b*** are held together by rings **19** and **20**. The lower retainer ring **20** acts simultaneously as a tube end ring of the tubular foot **24** (FIG. **4**). The two casing shells **16*a*** and **16*b*** and therefore the casing **16** formed therefrom are here die-cast metal components and in this case consist of zinc die-castings, they could however just as well be pressed or injection moulded from a suitable plastics material.

Since the trip cam **14** on account of its mounting in the casing **16** is a component part of the castor, the castor can be accurately adjusted during its assembly in respect of the co-operation of the trip cam **14** and locking pin **7** by means of the cap nut **15** and an associated lock nut **15*a***, so that the castor is ready for installation and will not need to be subsequently adjusted when it is inserted in the tubular foot **24** of the bed frame or other piece of furniture and is secured therein by means of a screw **25**.

Now all that is necessary is to push the control lever or shift linkage **26** by its flattened end through the registering bores **21** and **22** of the tubular foot **24** and through the casing **16** into the corresponding bore **23** flat on one side of the trip cam **14**. As the castor has been set ready for installation by means of the casing **16** and the trip cam **14** supported therein, it is possible to obtain from the first an optimum locking of all the runners of the bed frame, without further adjustments being necessary.

We claim:

1. In a runner, preferably a castor, comprising a housing structure with an axis and a running wheel rotatable on said axis, a back-set bearing pivot arranged on said housing structure, an axially movable locking pin passing through the bearing pivot, trip camming means arranged to act on said locking pin, and securing means arranged in said housing structure to be acted on by said locking pin to lock the running and/or swivelling movement of the wheel, the improvement which comprises a casing enclosing said bearing pivot and locking pin over substantially their entire extent, and forming an integral component part of the runner, said trip camming means being movably but inlosably enclosed within said casing and supported in said casing and force connected to said locking pin and forming an integral component part of the runner, said casing forming a substantially smooth attachment plug by means of which the runner can be fitted in a tubular foot and the like and having near its upper end at least one horizontal bore which coincides with a bore of said trip camming means being enclosed in said casing to receive a control lever of said camming means.

2. A runner as claimed in claim **1**, wherein the casing is formed of two half shells.

3. A runner as claimed in claim **1**, wherein the casing is a die-cast metal component, for instance, of zinc.

4. A runner as claimed in claim **2**, wherein the two half-shells are die-cast metal components, for instance, of zinc.

5. In a runner, preferably a castor, as claimed in claim **1**, which runner comprises a housing structure with an axis and a running wheel rotatable on said axis, a back-bearing pivot arranged on said housing structure, an axially movable locking pin passing through the bearing pivot, trip camming means arranged above the upper end of said bearing pivot to act on the head of said locking pin, and securing means arranged in said housing structure to be acted on by said locking pin to lock the running and/or swiveling movement of the wheel, wherein there are two half-shells forming a casing enclosing said bearing pivot and locking pin over substantially their entire extent, and forming an integral component part of the runner, said camming means being movably but inlosebly enclosed within said casing and supported in said casing above the upper end of said bearing pivot and force connected to said locking pin and being turnable in said casing for acting on the head of said locking pin and form ing an integral component part of the runner, said two half-shells of said casing forming a substantially smooth attachment plug by means of which the runner can be fitted into a tubular foot and the like, which plug having near its upper end at least one horizontal bore arranged in at least one said half-shell which coincides with a bore of said trip camming means being enclosed in said casing to receive a control lever of said camming means after inserting or fitting said plug into a tubular foot or the like.

6. A runner as claimed in claim **5**, wherein each half-shell has at its lower end an inner beading, and the back-set bearing pivot has an outer groove in which said beadings engage.

7. A runner as claimed in claim **5**, wherein the two casing half-shells are held together at their upper and lower ends by retainer rings.

8. A runner as claimed in claim 7, wherein the lower retainer ring simultaneously acts as a tube end ring of said tubular foot and the like.

9. A runner as claimed in claim 5, wherein the two casing half-shells are die-cast metal components.

10. A runner as claimed in claim 9, wherein the casing half-shells consists of zinc castings.

* * * * *