US00D971433S

(12) **United States Design Patent** (10) **Patent No.: US D971,433 S**
Castellanos (45) **Date of Patent: ** Nov. 29, 2022**

(54) **COMBINED ADMINISTERING APPARATUS WITH DISPENSING DEVICE**

(71) Applicant: **Daniel Castellanos**, Bronx, NY (US)

(72) Inventor: **Daniel Castellanos**, Bronx, NY (US)

(73) Assignee: **The Original Sustainable Joint LLC**, Bronx, NY (US)

(**) Term: **15 Years**

(21) Appl. No.: **29/810,068**

(22) Filed: **Sep. 30, 2021**

Related U.S. Application Data

(63) Continuation of application No. 17/386,514, filed on Jul. 27, 2021.

(60) Provisional application No. 62/704,856, filed on May 31, 2020.

(51) **LOC (13) Cl.** **24-02**

(52) **U.S. Cl.**
USPC **D24/220**

(58) **Field of Classification Search**
USPC D24/220, 216; D7/679, 376, 584, 682; D23/261; D15/138, 147; D27/194, 196; D21/694
CPC B01F 35/50; A61J 7/0023; A61J 7/0007; A61J 42/46; A61M 15/06
See application file for complete search history.

(56) **References Cited**

U.S. PATENT DOCUMENTS

2,549,644 A * 4/1951 Silverman B01F 35/50 68/213
2,602,596 A * 7/1952 Jones A61J 7/0007 241/270
D285,966 S * 9/1986 Porter D24/220
(Continued)

Primary Examiner — Rhea Shields
(74) *Attorney, Agent, or Firm* — Wiggin and Dana LLP; Thomas M. Landman; Brian A. Pattengale

(57) **CLAIM**

The ornamental design for an combined administering apparatus with dispensing device, as shown and described.

DESCRIPTION

FIG. **1** is a top front perspective view of a dispensing device of an combined administering apparatus with dispensing device showing my new design, in an assembled position;
FIG. **2** is both a top view and a bottom view thereof;
FIG. **3** is a front view thereof;
FIG. **4** is a side view thereof;
FIG. **5** is a top front perspective exploded view thereof;
FIG. **6** is a top right perspective view of an administering apparatus of an combined administering apparatus with dispensing device showing my new design, in an assembled position;
FIG. **7** is a top view thereof, showing an administration mouthpiece;
FIG. **8** is a side view thereof;
FIG. **9** is a bottom view thereof, showing an end cap;
FIG. **10** is an exploded right perspective view thereof;
FIG. **11** is a top front perspective view of the combined administering apparatus with dispensing device showing the dispensing device separated to accept the above-positioned administering apparatus with the end cap detached; and,
FIG. **12** is a top front perspective view thereof, showing the administering apparatus, with the end cap detached, engaging with the dispensing device separated to accept the administering apparatus.
The broken lines depicting portions of the combined administering apparatus with dispensing device in which the design is embodied form no part of the claimed design.

1 Claim, 8 Drawing Sheets

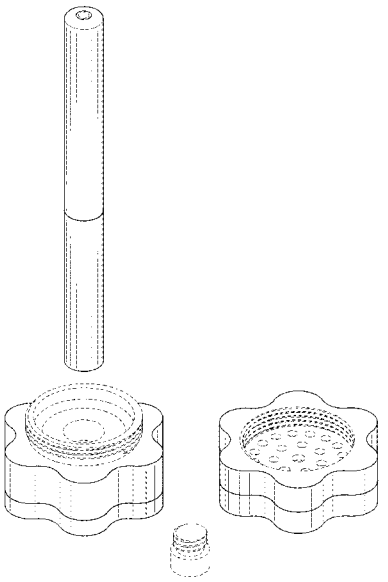

(56) **References Cited**

U.S. PATENT DOCUMENTS

4,967,971	A	*	11/1990	Smith	A61J 7/0007 241/DIG. 27
D337,828	S	*	7/1993	Gordon	D24/220
D358,659	S	*	5/1995	Rohrabacher	D24/220
D406,019	S	*	2/1999	La Gro	D27/196
D474,378	S	*	5/2003	Brandenburg	D7/679
D490,160	S	*	5/2004	Sorensen	D24/220
7,234,658	B2	*	6/2007	Lee	A47J 42/46 241/258
7,458,300	B2	*	12/2008	Williams	A61J 7/0007 83/13
D607,476	S	*	1/2010	Saul	D15/138
D612,212	S	*	3/2010	Guyot	D7/584
D642,023	S	*	7/2011	Reay	D7/682
D665,918	S	*	8/2012	Place	D24/220
D690,432	S	*	9/2013	Sharpe	D24/220
D702,853	S	*	4/2014	Priebe	D24/220
D715,345	S	*	10/2014	Noumi	D15/147
D724,702	S	*	3/2015	D'Amico	D23/261
D776,294	S	*	1/2017	Sharpe	D24/220
D809,153	S	*	1/2018	Noble	D24/220
D827,148	S	*	8/2018	Lam	D7/682
D857,132	S	*	8/2019	Dube	D21/694
D874,886	S	*	2/2020	Breneman	D7/679
D882,111	S	*	4/2020	Bib	D24/220
D891,634	S	*	7/2020	Skakoon	D24/220
D907,236	S	*	1/2021	Lee	D24/220
10,993,880	B2	*	5/2021	Evans	A61J 7/0023
D925,058	S	*	7/2021	Robinson	D24/216
D934,444	S	*	10/2021	Kaplun	D24/220
D945,227	S	*	3/2022	Li	D27/194
D961,990	S	*	8/2022	Walter	D7/376
2021/0393896	A1	*	12/2021	Castellanos	A61M 15/06

* cited by examiner

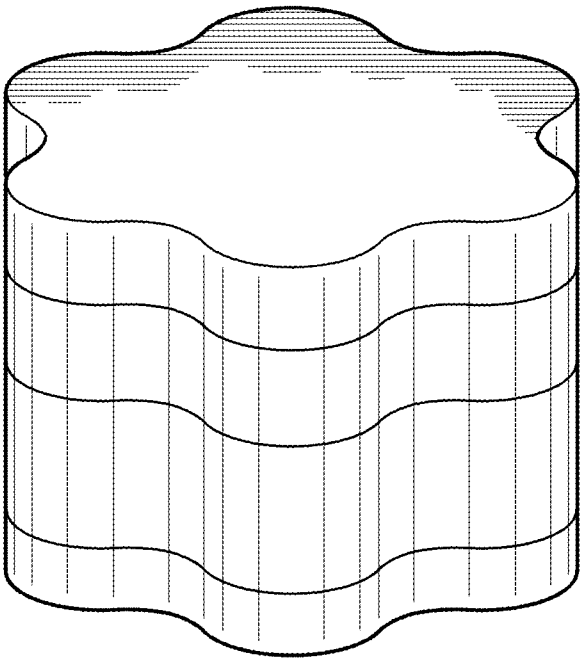

FIG. 1

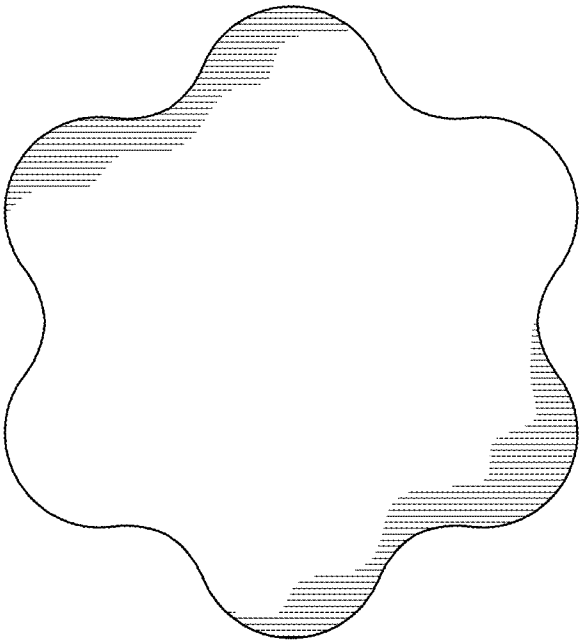

FIG. 2

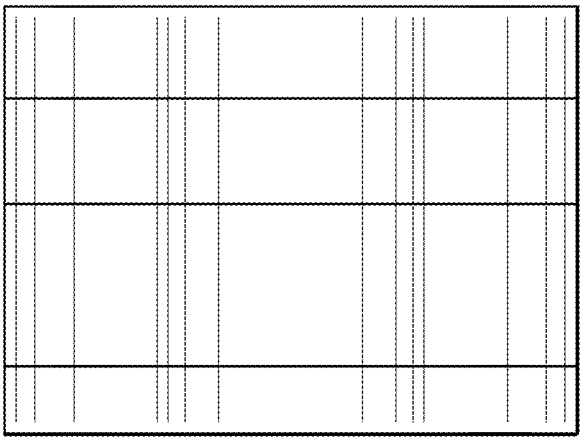

FIG. 3

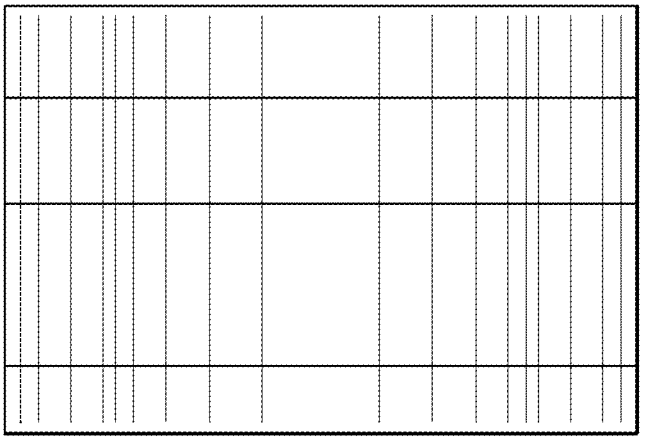

FIG. 4

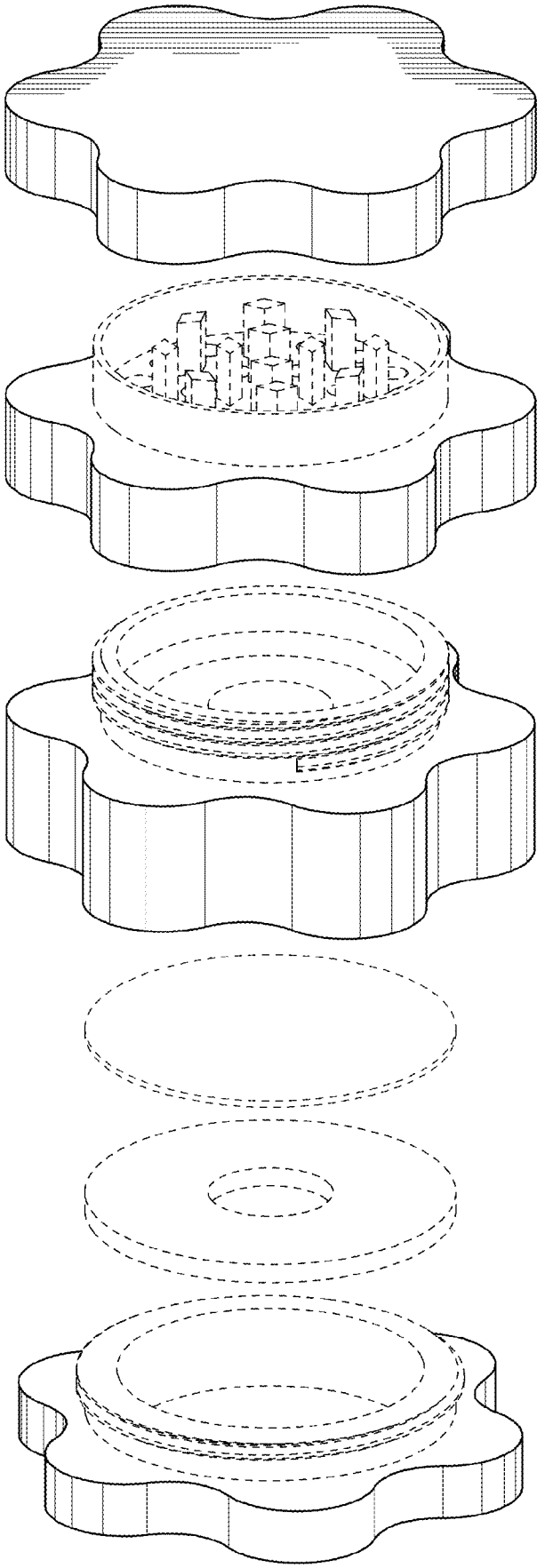

FIG. 5

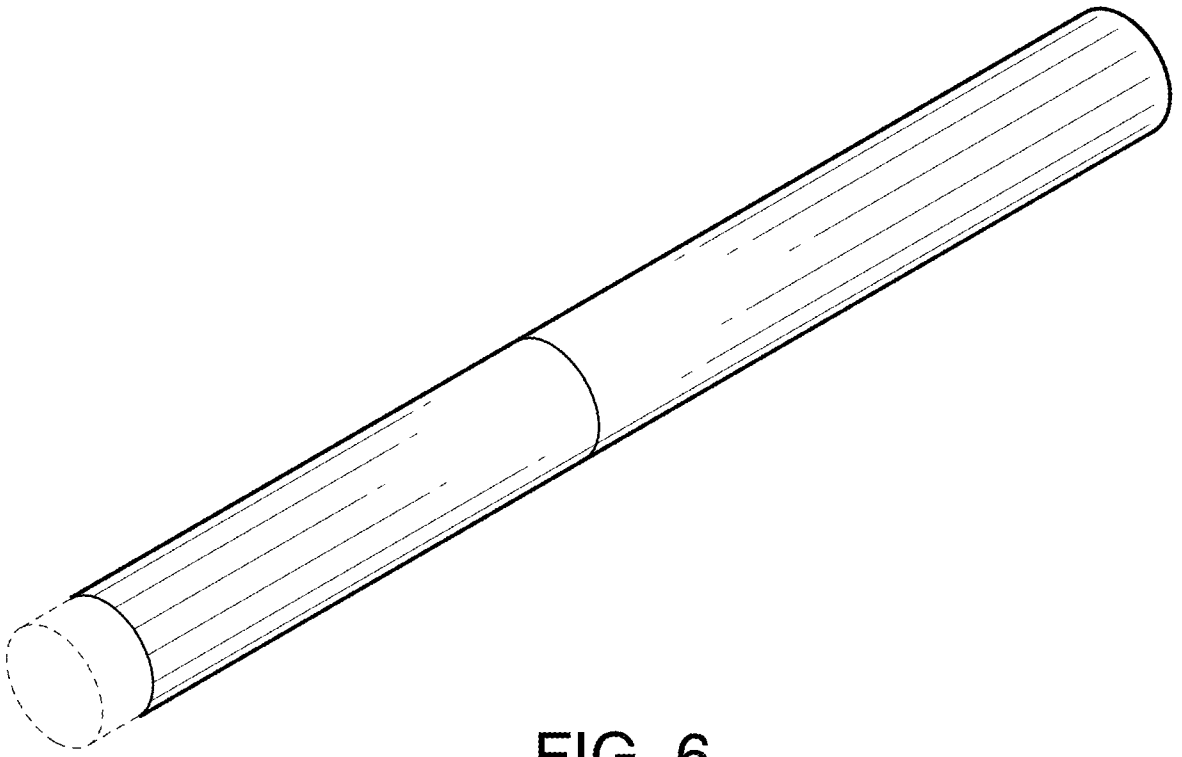

FIG. 6

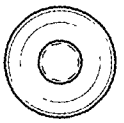

FIG. 7

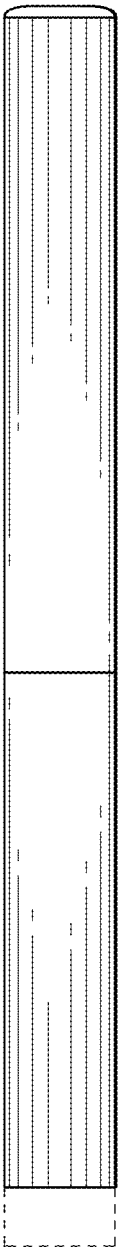

FIG. 8

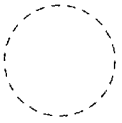

FIG. 9

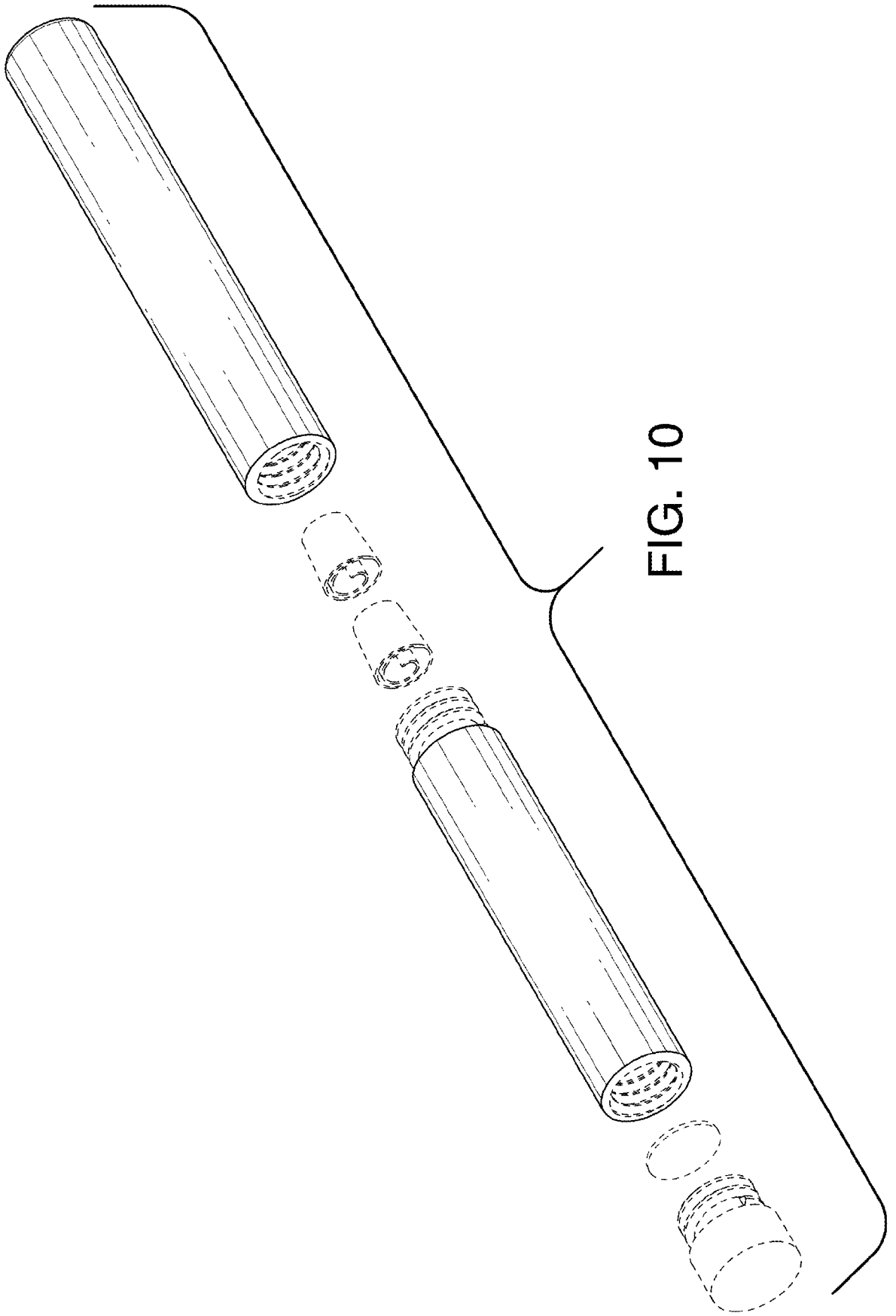

FIG. 10

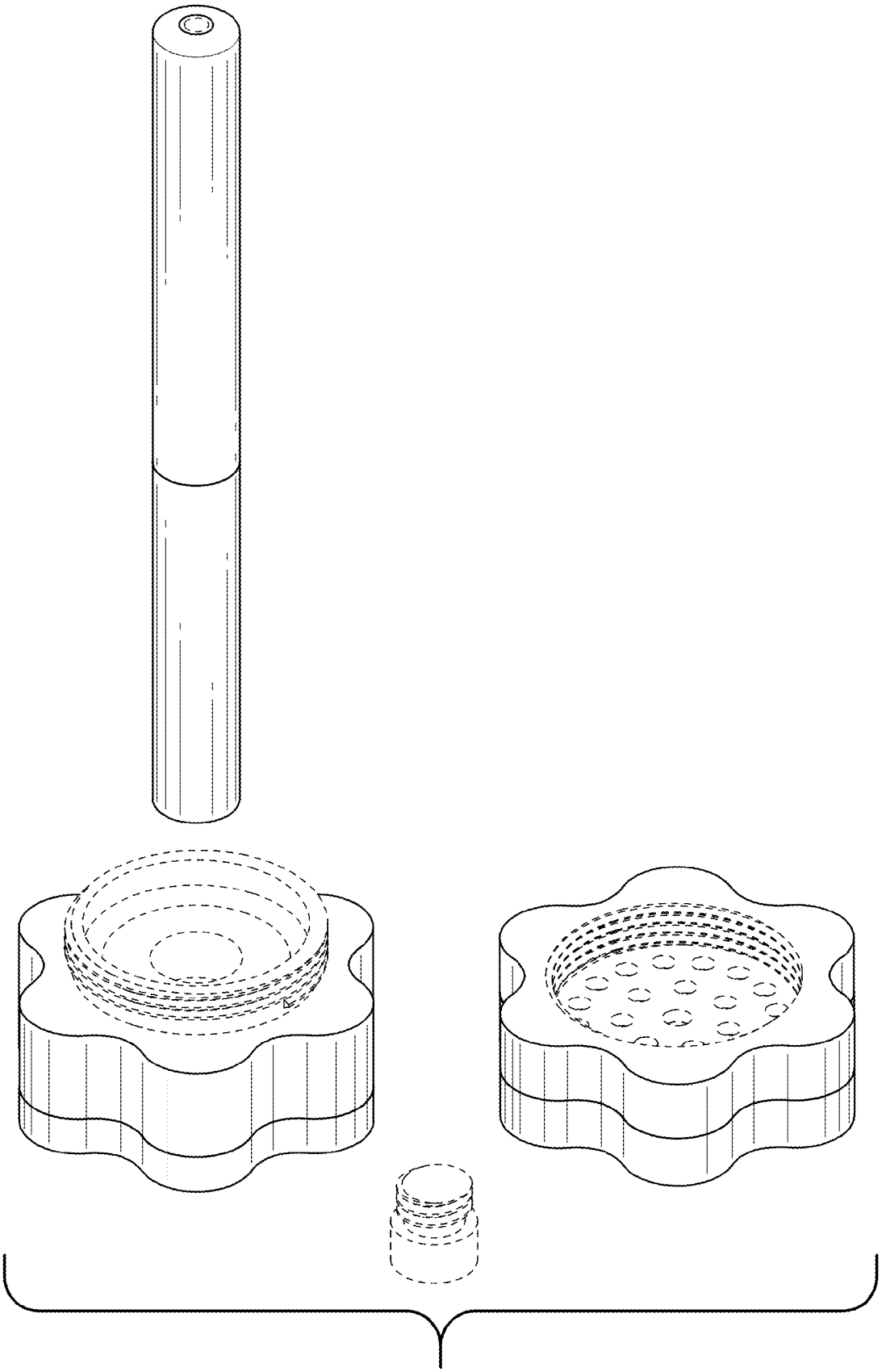

FIG. 11

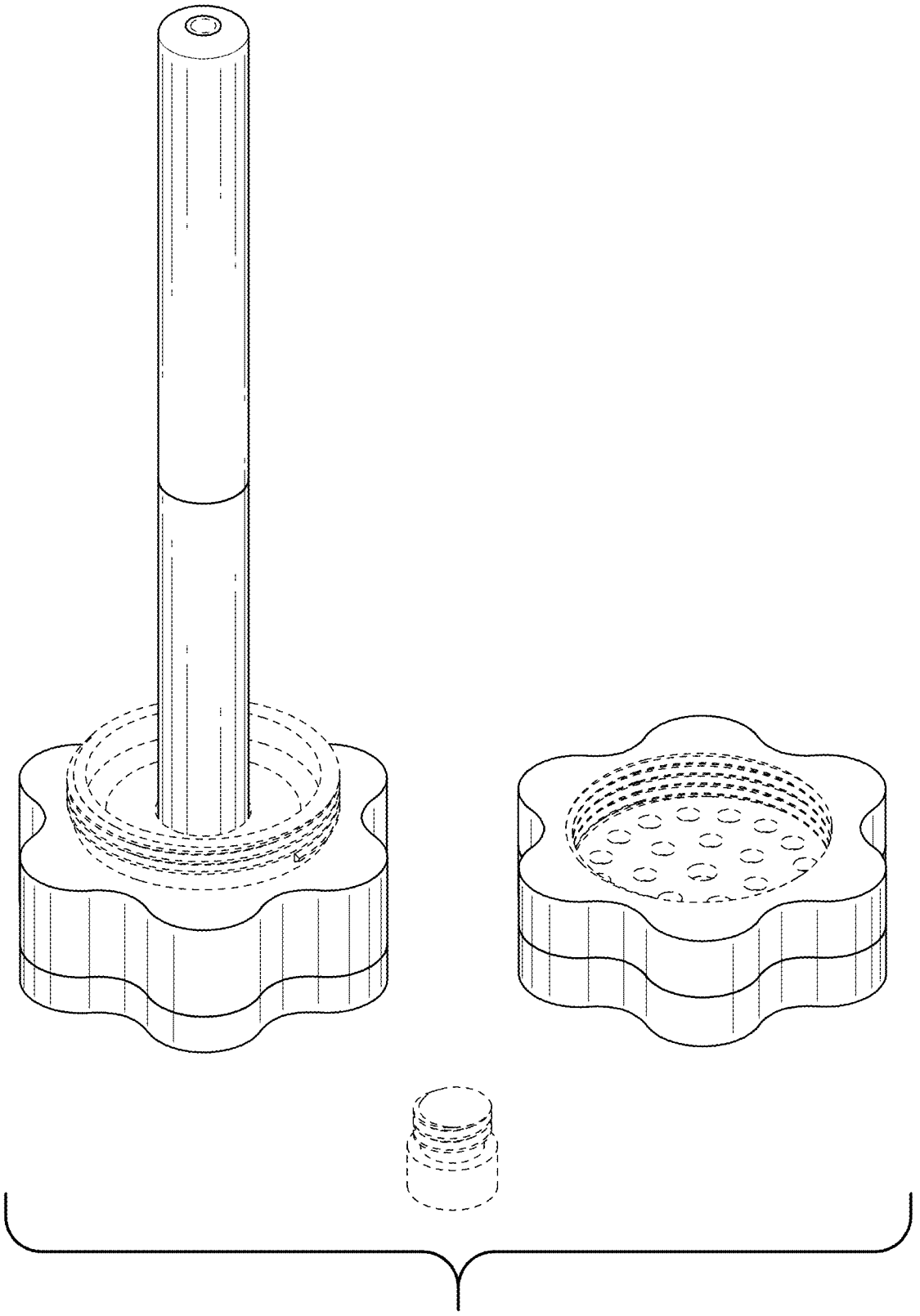

FIG. 12