(No Model.)

C. S. STARR.

CURRY COMB.

No. 455,930. Patented July 14, 1891.

Fig. 1.

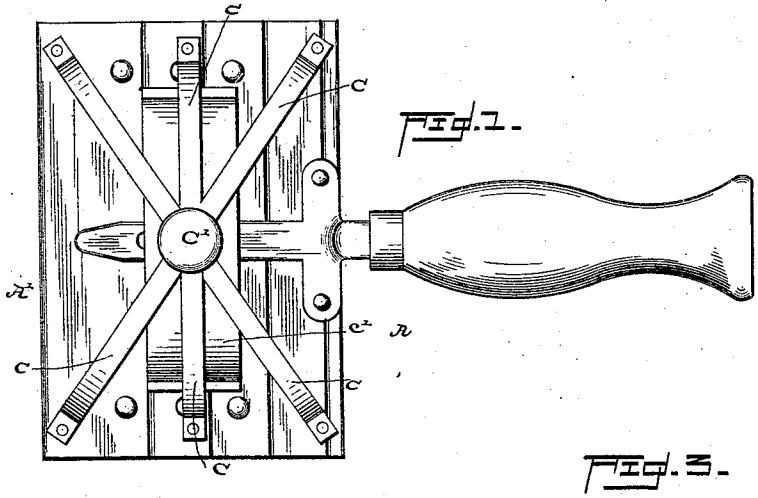

Fig. 2.

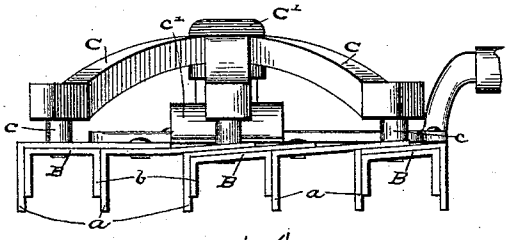

Fig. 3.

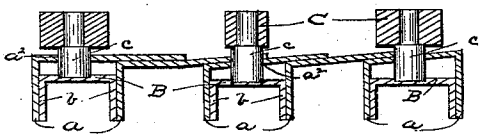

Fig. 4.

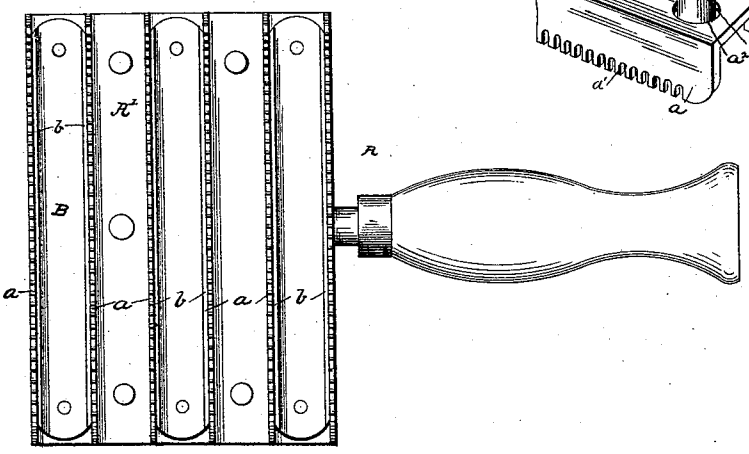

Fig. 5.

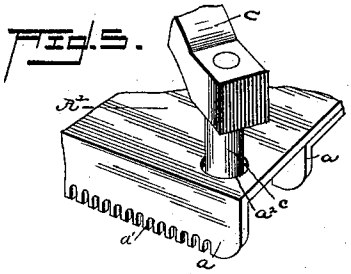

Witnesses

E. S. Duvall Jr.

Ezra Smith

Inventor

Charles S. Starr.

By his Attorneys,

C. A. Snow & Co.

THE NORRIS PETERS CO., PHOTO-LITHO., WASHINGTON, D. C.

UNITED STATES PATENT OFFICE.

CHARLES S. STARR, OF ELMIRA, NEW YORK.

CURRY-COMB.

SPECIFICATION forming part of Letters Patent No. 455,930, dated July 14, 1891.

Application filed November 13, 1890. Serial No. 371,333. (No model.)

To all whom it may concern:

Be it known that I, CHARLES S. STARR, a citizen of the United States, residing at Elmira, in the county of Chemung and State of New York, have invented a new and useful Curry-Comb, of which the following is a specification.

My invention is an improvement in curry-combs, and has for its object to provide a curry-comb with means whereby its teeth may readily be cleaned.

With these objects in view the invention resides in the various novel details of construction and in the combination of parts hereinafter fully described, and particularly pointed out in the claim.

In the drawings, in which I have illustrated my invention, and in which like letters of reference indicate corresponding parts, Figure 1 is a plan view of the back of my curry-comb. Fig. 2 is a side elevation thereof. Fig. 3 is a transverse section thereof. Fig. 4 is a plan view of the face-plate. Fig. 5 is a detail view of some of the parts.

In the drawings, the letter A designates a curry-cumb having a base-plate A′, formed by the upper ends of the blades *a*, in the lower edges of which are formed the usual teeth *a*′. The blades are of inverted-L shape, the upper portion of each blade overlapping the corresponding portion of the next succeeding blade. In this manner the base-plate A′ is formed. The base-plate A′ is perforated at its center and four corners for a purpose to be described. In every other space between the blades *a* are U-shaped cleaning-plates B, extending nearly or quite the length of the said blades and having their upturned edges *b* close to or scraping against them. These U-shaped cleaning-plates B are rigidly fastened at both ends to fingers *c*, which extend from the arms C at the back through holes a^2 in the base-plate A′. The arms C all extend from a common head C′, being by preference integral therewith. A leaf-spring *c*′ is secured to the head C′ on its inner side, and its free ends press against the base-plate A′, serving normally to hold the said head away from the base-plate A′, and thus also to keep the U-shaped cleaning-plates B close up against the base-plate A′ and away from the teeth *a*′.

In using my comb, whenever the teeth become clogged with hair or dirt they may be cleaned in the following ways, to wit: by pressing the head C′ down with the thumb, thereby causing the U-shaped cleaning-plates to scrape against the sides of the teeth and to remove the accumulated hair and dirt, or the said head may be sharply struck against a solid substance, producing the same effect, or by swinging the comb through the air in the manner a whip might be swung to make it snap—*i. e.*, by moving the comb through the air swiftly and suddenly bringing the motion to an end—whereby the momentum of the spring-controlled parts will cause them to overcome the resistance of the spring, and hence allow the cleaning-plates B to scrape forward suddenly and carry such hair and dirt as they encounter with them beyond the teeth.

While I have described and shown a curry-comb provided with U-shaped cleaning-plates B arranged in every other space between the blades *a*, I do not wish to be limited to this construction, as I may place the same in all the spaces between the teeth.

Having thus fully described my invention, what I claim as new, and desire to secure by Letters Patent, is—

In a curry-comb, the combination, with the series of radiating arms C, each terminating at its outer end in a downwardly-disposed reduced finger *c*, of the series of transversely-disposed inverted-L-shaped blades *a*, the horizontal or upper portions of which overlap to form a base-plate, which latter is perforated to receive the fingers aforesaid, the flat bowed spring secured at its center to the point of deviation of the arms C and having its terminals resting loosely upon the base-plate, and the inverted-U-shaped scrapers located between the terminals of the blades and secured to the fingers, substantially as specified.

In testimony that I claim the foregoing as my own I have hereto affixed my signature in presence of two witnesses.

CHARLES S. STARR.

Witnesses:
W. M. WOOD,
J. C. GALLAGHER.