United States Patent [19]

Muderlak et al.

[11] **Patent Number: 5,038,972**

[45] **Date of Patent: Aug. 13, 1991**

[54] **METERED AEROSOL FRAGRANCE DISPENSING MECHANISM**

[75] Inventors: **Kenneth J. Muderlak**, Shorewood; **Patrick D. Maloney**, Madison, both of Wis.

[73] Assignee: **Technical Concepts, Inc.**, Chicago, Ill.

[21] Appl. No.: **412,937**

[22] Filed: **Sep. 26, 1989**

[51] **Int. Cl.**[5] **B67D 5/06**

[52] **U.S. Cl.** **222/25**; 222/36; 222/649; 239/70; 239/71; 239/74

[58] **Field of Search** 222/23, 32, 36, 38, 222/25, 644–649; 239/70, 75, 71, 74

[56] **References Cited**

U.S. PATENT DOCUMENTS

Re. 29,117	1/1977	Sahajian et al.	222/649
3,589,563	6/1971	Carragan et al.	239/70 X
3,952,916	4/1976	Phillips	222/645
4,063,664	12/1977	Meetze, Jr.	222/648
4,719,851	1/1988	Chesnut	222/646 X
4,736,871	4/1988	Luciani et al.	222/25
4,817,822	4/1989	Rand et al.	222/38

Primary Examiner—Michael S. Huppert
Assistant Examiner—Gregory L. Huson
Attorney, Agent, or Firm—Welsh & Katz, Ltd.

[57] **ABSTRACT**

An apparatus and controlling circuitry for periodically operating an aerosol container in discrete dispensing intervals to disperse a discrete quantity of the contents thereof. The apparatus includes a powered mechanism for actuating the aerosol, with the circuitry controlling the powered mechanism for a predetermined number of actuations. An energizing means activates a warning mechanism when the actuation count reaches the predetermined number to thereby indicate the probable total evacuation of the aerosol container and the necessity for termination of the operation. The apparatus also includes means for setting the circuitry into a plurality of different operating modes, including a continuous intermittent operation, a controlled daytime operation, and a controlled night operation. The apparatus may be battery operated, and it then includes a second warning mechanism for indicating whether the battery power is sufficient to operate the powered mechanism.

25 Claims, 4 Drawing Sheets

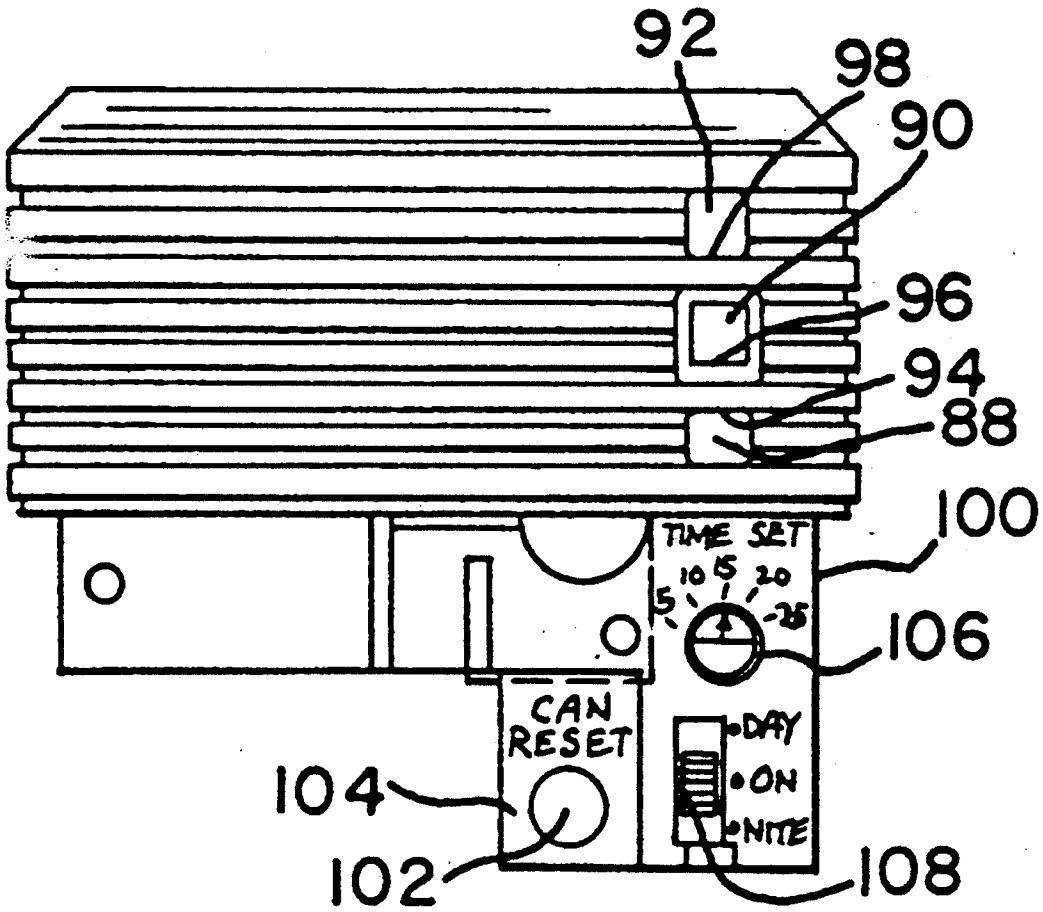

FIG. 1

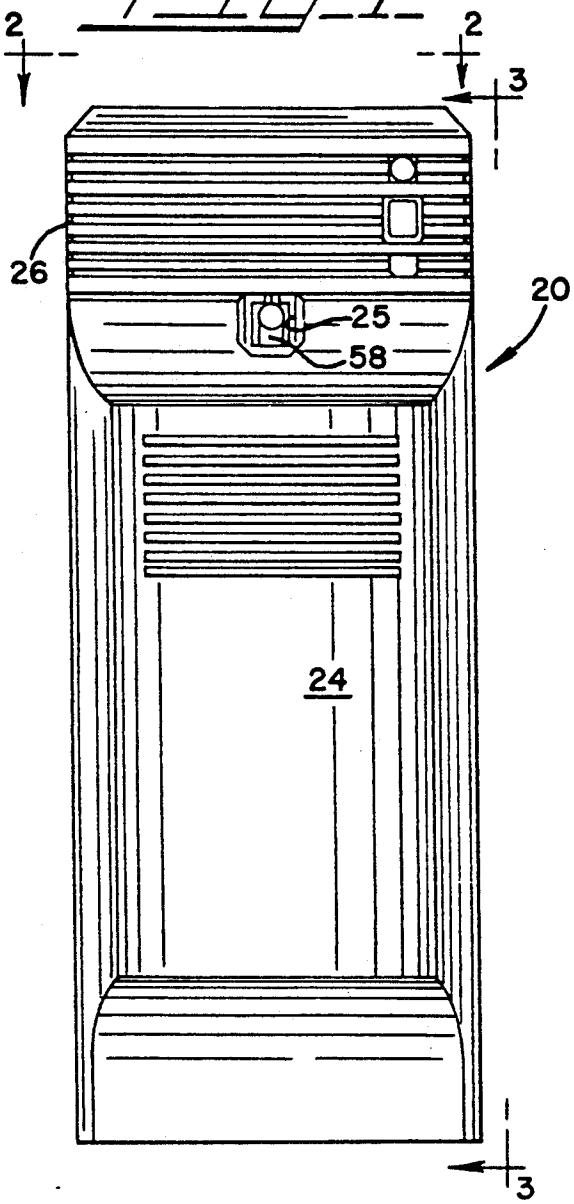

FIG. 3

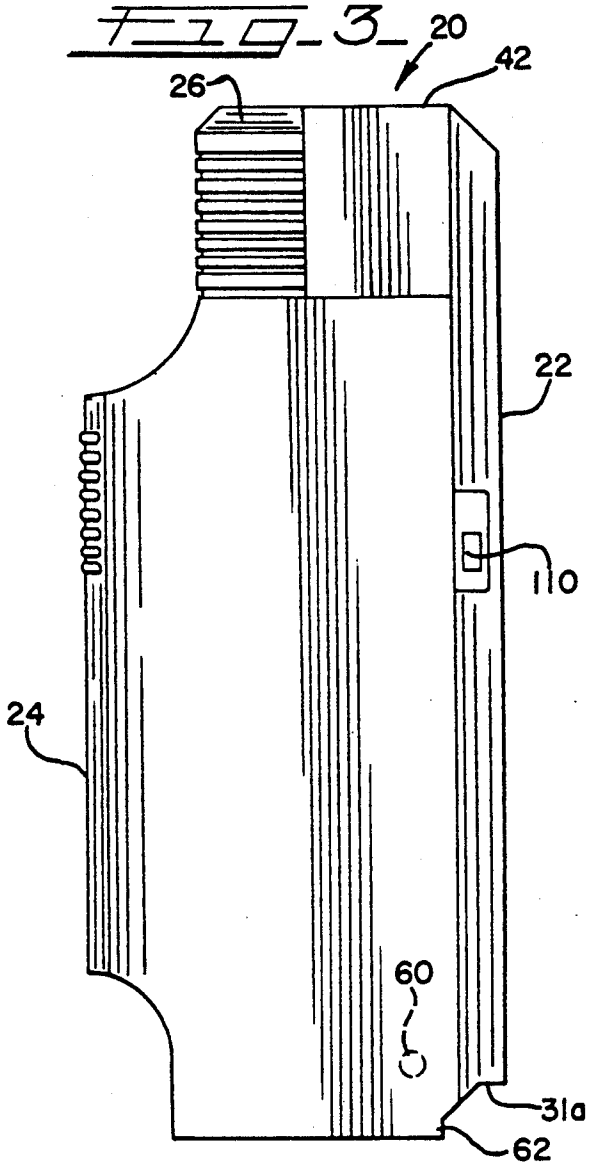

FIG. 2

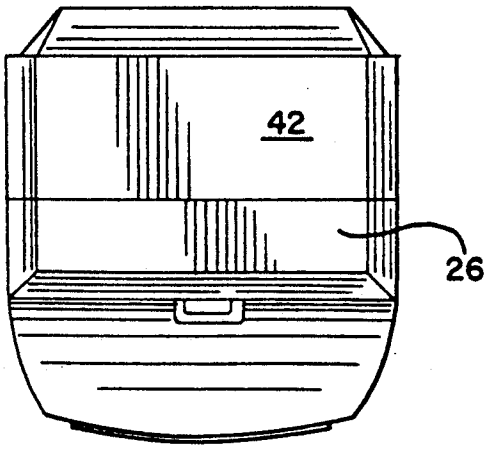

FIG. 4

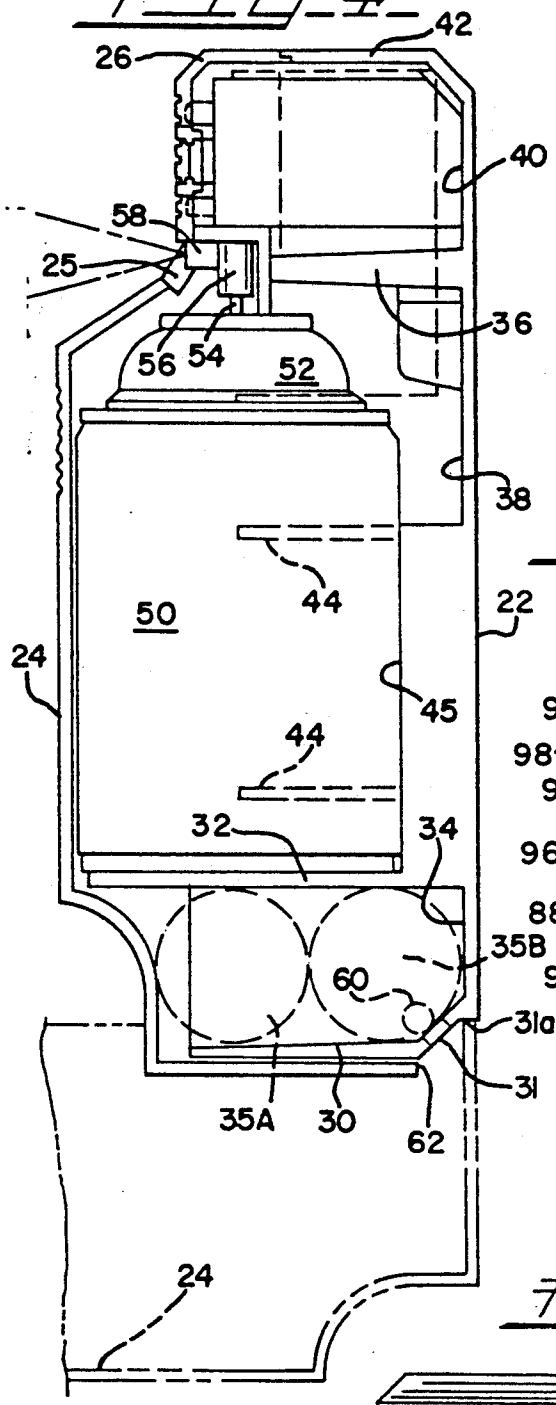

FIG. 5

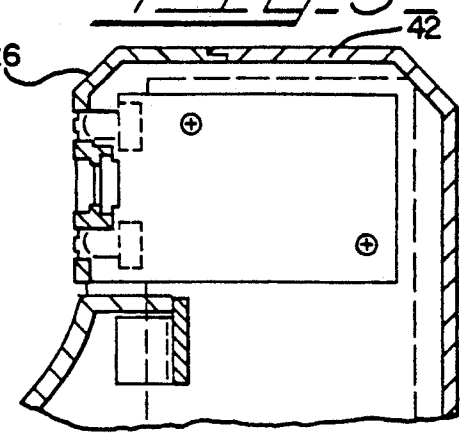

FIG. 6

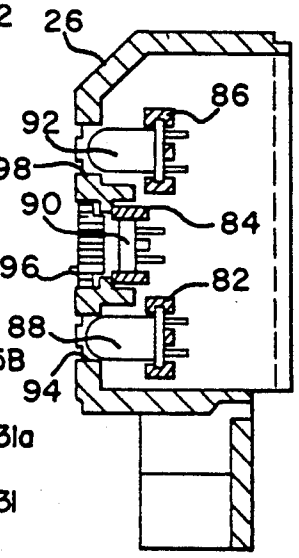

FIG. 8

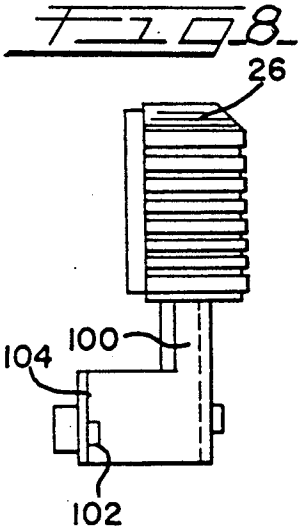

FIG. 7

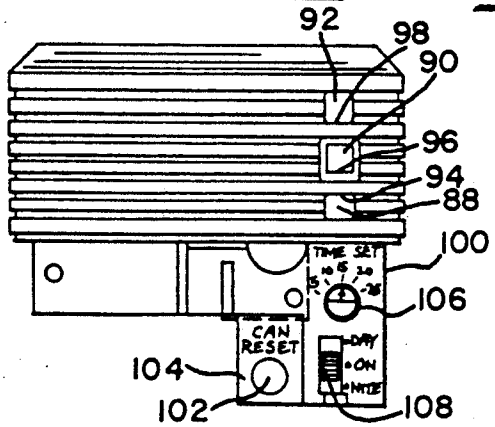

FIG. 9

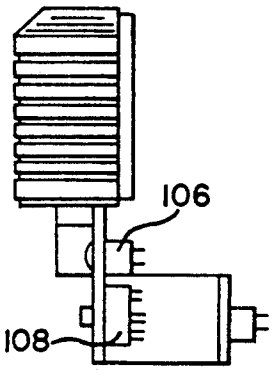

FIG. 10

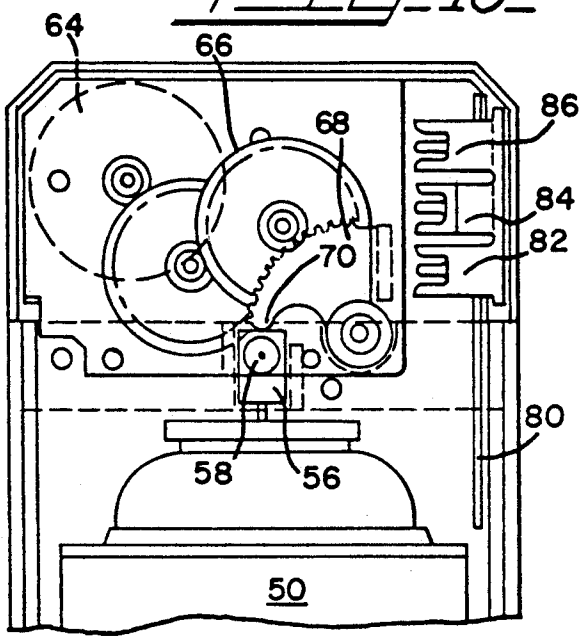

FIG. 11

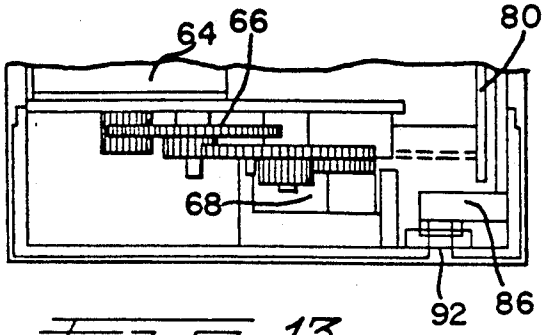

FIG. 13

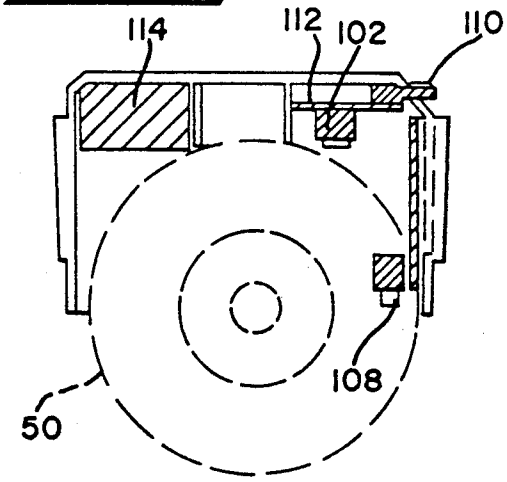

FIG. 12

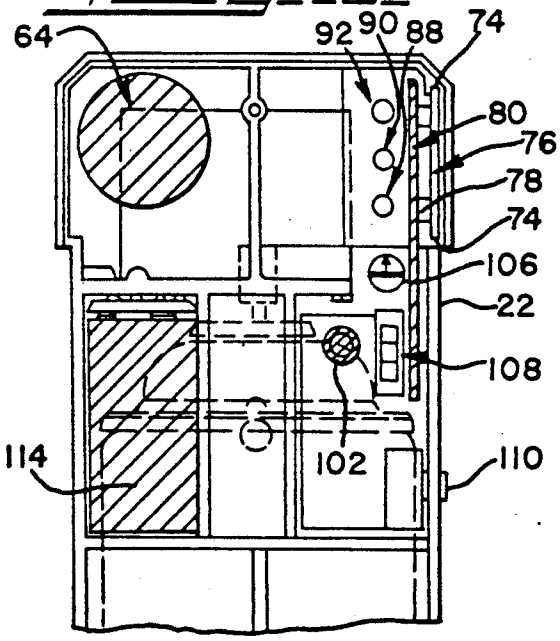

FIG. 14

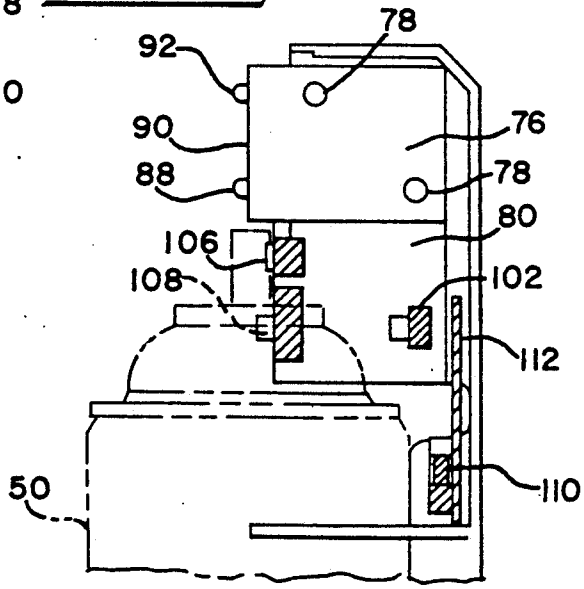

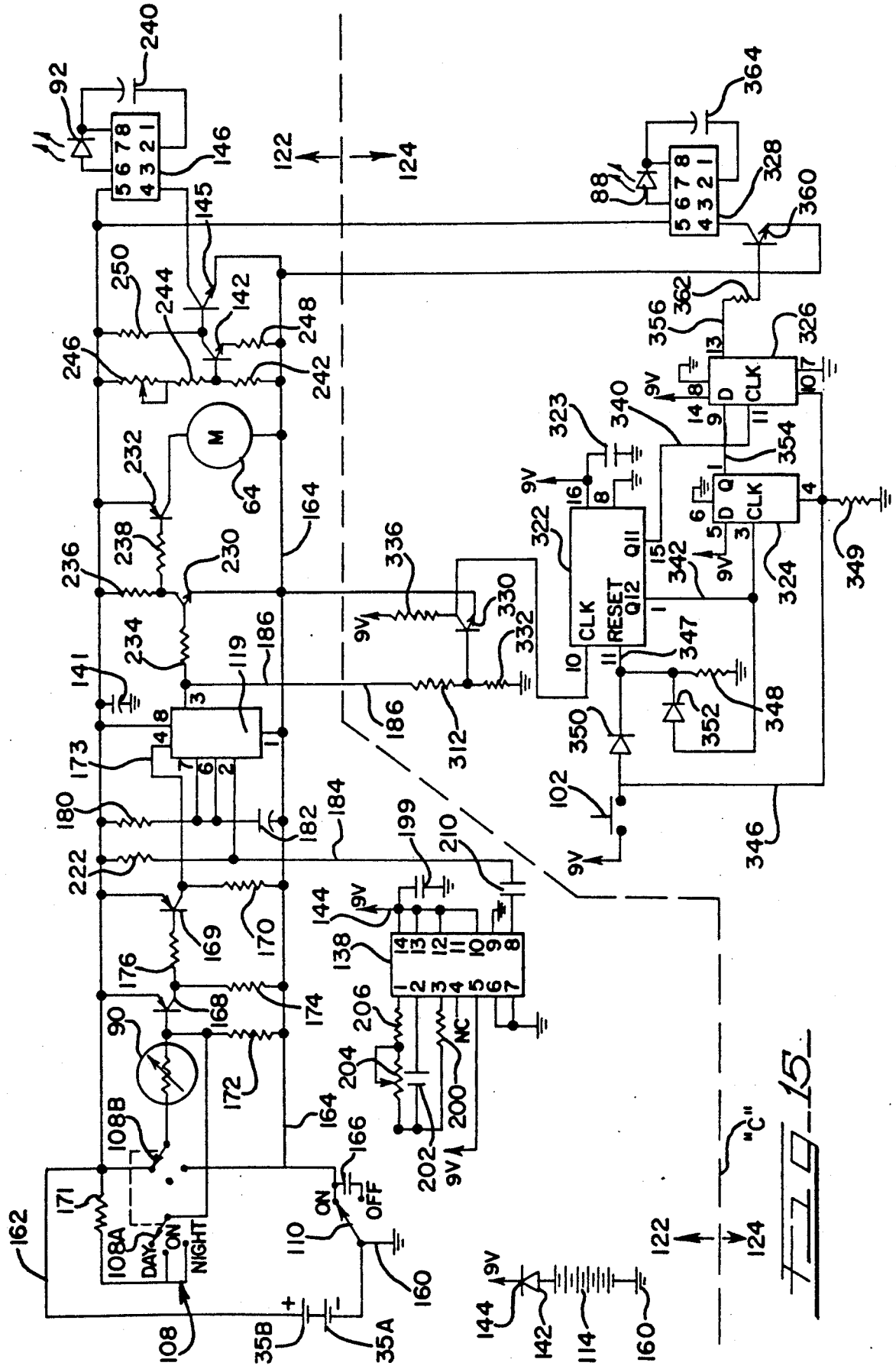

FIG. 15

METERED AEROSOL FRAGRANCE DISPENSING MECHANISM

BACKGROUND OF INVENTION

This invention relates to devices utilized in public facilities for dissipation of malodoriferous aromas due to any of several conditions. In the past, various solid materials were utilized which sublimated and thereby dispersed the normally overpowering substitute odor for that found in the public place. In order to enhance the dispersion of such sublimating materials, many suppliers developed and began supplying powered fan devices which assisted in the wide flow of odor covering material. Similarly, the chemists worked on odor suppressing materials which directly worked on the destruction of the odor causing materials dispersed in the atmosphere, particularly where pets were encountered.

Such devices can be found readily in the prior art. For example, the common assignee of the present invention has a pending patent application, Ser. No. 07/162,021, Filed Feb. 29, 1988, entitled "IMPROVED ODOR CONTROL DEVICE". Other such solid dispersing devices are found in the patents to: Corris U.S. Pat. No. 3,990,848; Sullivan et al U.S. Pat. No. 4,271,092; Tringali U.S. Pat. No. 4,035,451; and Sullivan et al U.S. Pat. No. 4,276,236.

In the field of odor control devices where a pressurized aerosol container is utilized, the patents include Corris U.S. Pat. No. 4,006,844; Rogerson U.S. Pat. No. 3,739,944; Meetze U.S. Pat. No. 4,063,664; Cairelli U.S. Pat. No. 3,139,218; Wiley U.S. Pat. No. 3,165,238; Cielaszyk U.S. Pat. No. 3,318,159; Montgomery U.S. Pat. No. 3,01,056; Bell U.S. Pat. No. 3,587,332; Phillips U.S. Pat. No. 3,952,916 and Guitierrez U.S. Pat. No. 4,483,466.

SUMMARY OF THE INVENTION

The present invention is a unique and economically constructed apparatus for the periodic actuation of an aerosol container under a controlled environment.

It is an object of the present invention to provide an apparatus and circuitry that will accurately count the number of times that a spray is actuated and to initiate a signal when a predetermined number is reached to indicate that the spray is nearing the end of its useful life.

Another object of this invention is to provide an independently contained power source in the form of batteries to power the actuation thereof and to provide means for measuring such batteries and advising when they are low or totally dissipated.

Still another object of the present invention is to provide a light sensing means which will control operation under varying modes of operation, including both a day and a night mode along with a continuous mode.

A further object is to provide means to advise when the aerosol container is nearing an empty condition, to provide means for giving an adjustable time parameter for the intervals of disbursement, as well as being able to adjust the termination point, and to provide means to reset the device when a full aerosol replaces a dissipated aerosol.

Other objects will become apparent when the specification is read in the light of the attached drawings where an illustrative example is disclosed.

BRIEF DESCRIPTION OF THE DRAWINGS

FIG. **1** is a front elevational view of the housing containing the device contemplated by the present invention;

FIG. **2** is a top view of the housing taken along viewing line **2—2** of FIG. **1**;

FIG. **3** is a right side elevational view of the housing taken along viewing line **3—3** of FIG. **1**;

FIG. **4** is a right side elevational view, similar to FIG. **3**, but shown schematically in partial section, presenting the disposition of the aerosol container within the housing and showing a partial phantom side view of the lower front cover of the housing in its downward hinged position;

FIG. **5** is a partial side elevation view, presented schematically in partial section, showing the snap fastening means whereby the hinged lower front cover is retained in closed relation to the rigid portion of the housing;

FIG. **6** is a partial side elevational view, presented schematically in partial section, showing the disposition of the warning and sensing means within the front upper cover means of said housing;

FIG. **7** is a front elevational view of the upper cover means showing the disposition of the upper battery warning LED, the middle light sensing means, the lower empty can warning LED and the items normally hidden by the lower hinged cover, i.e., the interval time adjustment means, the reset switch means, and the day-on-nite switch means;

FIGS. **8** and **9** are the left and right elevational views, respectively, of the upper housing or cover means of the device as shown in FIG. **7**;

FIGS. **10** and **11** are the schematic front and top views, respectively, of one embodiment of actuating means for operation of the contemplated invention;

FIGS. **12**, **13**, and **14** are respectively a schematic partial front elevation of the housing of this device, a schematic top plan view thereof, and a schematic right side elevational view thereof, showing the disposition of the printed circuit, the light emitting diodes (LEDs), the motor, the switches and one of the batteries used for the circuit; and

FIG. **15** is a diagram of one embodiment of a circuit that can be utilized to operate the present invention.

DETAILED DESCRIPTION OF THE INVENTION

Referring now to the drawings, and particularly to FIGS. **1-4**, wherein similar parts are designated by similar numerals, the improved fragrance dispensing mechanism **20** includes a substantially rigid body portion **22**, a hinged lower front cover **24**, and an upper front cover **26**. The rigid body portion **22** includes a bottom **30**, a shelf **32** spaced from bottom **30** and forming a lower chamber **34**, and an upper barrier means **36** spaced from shelf **32** forming the major central chamber **38**, as well as forming the upper chamber **40** formed between the barrier means **36** and the top **42**. Rib means **44** and **45** along with shelf **32** serve to support and locate the pressurized aerosol can **50**, containing the frangrance to be dispensed. The can **50** includes the normal pressure retaining top **52** including the dispensing valve (not shown) and the axially extending spring loaded stem tube **54** communicating with the valve and having a spray forming actuating button **56** positioned on the free end of the stem tube **54**. Button **56** preferably in-

cludes right angularly arranged exhaust tube means **58** for directing the spray outwardly through aperture **25** in the cover **24**.

The lower chamber **34** is arranged to accomodate a pair of D-Cells **35A** and **35B**. The bottom **30** tapers upwardly in its rear extremity, as at **31**, and terminates in a shoulder means **31***a*. The lower front cover **24** is basically an open rectangularly shaped cover having front, side and bottom walls, with the side walls provided with complimentary means **60** for cooperation with mating means in the sidewall of body **22**, not shown, to act as pivot or hinge means to permit the front lower cover **24** to assume the opened position shown in phantom in FIG. **4**. The lower rear edge **62** of cover **24** is adapted to engage the shoulder means **31***a* to form a stop and thereby restrict the further lowering of the cover **24**, which lowering provides access to the central and lower chambers **34** and **38**, respectively.

The left portion of upper chamber **40**, as viewed in FIGS. **10** and **11**, is adapted to house the motor **64** and power transmission means **66** ending in actuating means **68**, such as a segment gear or the like and appropriate cam means **70** for engaging and activating the spring loaded spray button **56**. The balance of the chamber is utilized in housing an LED/PC drawer. This latter includes printed circuit board **80** cooperating with three receptacles **82**, **84** and **86** to accomodate and mount two light emitting diodes **88** and **92** in the lower and upper positions, respectively, and a light sensor **90** intermediate the LEDs, as best seen in FIG. **6**. Each of these three items, the LEDs and the sensor, communicate with the ambient through appropriate apertures **94**, **96** and **98**, respectively, in the upper body cover **26**, as shown in FIGS. **6** and **7**. The circuitry on the printed circuit board will be discussed hereinafter.

Referring now to FIGS. **6–9**, the upper front cover **26** includes a depending portion **100** adapted to carry a plurality of control devices, such as a reset button **102** mounted on a set back flange **104**; a time interval switch **106**; and an operating mode switch **108**, the latter providing three settings for continuously on, intermittently on (day) and continuously off (nite). Suitable lead means extend outwardly from the back of each switch for appropriate engagement with one of the PC boards.

A master on-off switch **110** is mounted on an appropriate PC board **112** (FIGS. **12–14**), and the operating button of switch **110** extends outwardly through the side wall of the body **22** so-as to be available to the outside. Positioned below the motor **64** and transmission means **66**; and behind the aerosol can **50** is a 9 volt battery **114** for purposes best set forth hereinafter.

Referring now to FIG. **15**, the sensor and motor control circuit **122** controls fragrance pump operation to optimize the life of both the fragrance material in the aerosol fragrance container and the batteries **35A** and **35B** while the pump generation counting circuit **124** provides a visual indication that the aerosol fragrance container **50** has probably been exhausted. Operating circuit **122** is located above the dashed line "C" in FIG. **15**, while counting circuit **124** is located below that line. The circuit **122** contains timing devices which limit each actuation of the fragrance pump motor **64** to a short period (approximately 0.6 seconds), and which provide a **15**-minute waiting interval between each pump actuation. In addition, the circuit provides a visual indication that the circuit **122** is switched "ON" and battery voltage is adequate for operation.

In brief, an on-off switch **110** controls power to the circuit from two 1½ volt D-cells **35A**, **35B**. A separate mode switch **108** selects one of three available modes of operation: "on", "night," or "day". In "on" mode, the fragrance pump operates for a brief period on 15-minute intervals regardless of room light conditions. The fifteen (15) minute interval is adjustable within the parameters of approximately five (5) minutes to twenty-five (25) minutes. In "night" mode, the fragrance pump is disabled regardless of room light conditions. In "day" mode, cadmium-sulfide photocell **90** is used to sense room light conditions. When room light exceeds a predetermined threshold, the fragrance pump operates according to the above-described timing. When room light is less than the predetermined threshold, the fragrance pump is disabled. IC **138** contains an oscillator and divider chain and it produces a 1/900 Hz signal (i.e. one cycle every 15 minutes which is) used to control the interval between actuations of the fragrance pump. IC **119** is a timer device which produces a 0.6 sec pulse used to control the length of each actuation of the fragrance pump. Transistors **142** and **145** form a voltage sensor which determines whether the D-cells **35A**, **35B** have sufficient energy to power the unit. IC **146** is controlled by transistor **145** and causes a visual indicator **92** to flash when switch **110** is "ON" and the D cells have sufficient energy. Conversely, the visual indicator **92** is not energized when the D cells have insufficient energy and must be replaced. A separate 9 volt battery **114** supplies power for the operation of IC **138** and a fragrance container empty indicator circuit **124**.

In greater detail, two D-cells **35A** and **35B** wired in series provide one power supply for the circuit **122**. The cathode of D-cell **35A** is connected to primary ground **160**. The anode of D-cell **35B** is connected to a positive 3 V supply lead **162**. The anode of D-cell **35A** is connected to the cathode of D-cell **35B**. Each D-cell has a nominal output voltage when "fresh" of 1.5 V, so that this series wiring provides +3.0 V to the +3 V supply conductor **162**.

All circuit devices which use the +3 V supply lead **162** also use a secondary ground lead **164** as a return path. Power switch **110** is a single-pole, double-throw switch which connects or disconnects the secondary ground lead **164** to primary ground **160**. In the ON position, switch **110** connects the secondary ground lead **164** directly to primary ground **160**. In the OFF position switch **110** interposes capacitor **166**, a 0.1 uF disc capacitor, between primary and secondary grounds **160**, **164** to minimize transient pulses which may occur when power is switched off.

A separate 9 volt battery **114** supplies power for IC **328** and the fragrance container empty indicator **88**. The cathode of battery **114** is connected to ground **160**. The anode of this battery is connected to the anode of a rectifier diode **142** (preferably type 1N4001) to prevent damage from an incorrectly inserted battery. The cathode of diode **142** is connected to the +9 V supply lead **144**.

Mode switch **108** is a double-pole, triple-throw switch used to select one of the three available operating modes: ON, DAY, or NIGHT. The operating mode determines the conditions under which the fragrance pump may operate. The three modes provide a continuous intermittent operation (ON), a controlled daytime operation (DAY), and a controlled night operation (NIGHT). In the ON position, the pump operates for a 0.6 sec period every 15 minutes. As was previously

mentioned above, the interval between such operating periods can be adjusted to various parameters, i.e. between approximately 5 minutes and 25 minutes, to meet the needs of the locale. In the DAY position, room light is sensed, and if it exceeds a predetermined threshold, the pump operates according to the previously discussed timing. In the night position, the pump is disabled.

The circuitry associated with mode switch **108** is used to control the bias on the base of PNP transistor **168** which, in turn, is used to control a timer IC **119** that drives the fragrance pump. When transistor **168** is on (conducting), timer IC**119** is disabled; when transistor **168** is off (non-conducting), timer IC **119** is enabled. Therefore, the mode switch circuitry will be described from the perspective of its effect on this transistor **168**.

In the ON position, mode switch pole **108A** connects the base of transistor **168** to the +3 V supply **162** through a 2.2K resistor **171**. Mode switch pole **108B** connects the base of transistor **168** to secondary ground **164** through 100K resistor **172**. Resistors **171** and **172** thus form a voltage divider between +3 V supply **162** and secondary ground **164**, which establishes the bias voltage on the base of transistor **168**. The emitter of transistor **168** is connected to +3 V supply **162**. Because the resistance of 2.2K resistor **171** is much less than 100K resistor **172**, the bias voltage is close to +3 V, and transistor **168** is biased off. As will be explained later, when transistor **168** is non-conducting, timer IC **119** is enabled, and the fragrance pump operates normally.

In the DAY position, mode switch pole **108A** is open. Mode switch pole **108B** connects the base of transistor **168** to the +3 V supply **162** through a CdS photocell **90**. The base of transistor **168** is also connected to secondary ground **164** through 100K resistor **172**. Photocell **90** and 100K resistor **172** thus form a voltage divider between +3 V supply **162** and secondary ground **164**, which establishes the bias voltage on the base of transistor **168**. Photocell **90** responds to light. In the absence of light, its resistance is relatively high, but when exposed to light, the photocell resistance decreases substantially. The emitter of transistor **168** is connected to +3 V supply **162**.

When the photocell **90** is deprived of light, as in a dark room, its resistance is high. The voltage applied to the base of transistor **168** is sufficiently lower than the +3 V supply **162** to which the emitter of that transistor is connected, so the transistor is biased on. When transistor **168** is conducting, timer IC **119** is disabled, and the fragrance pump is inhibited. When the photocell **90** is exposed to light, as in a lighted room, its resistance is low. The voltage applied to the base of transistor **168** is then sufficiently close to +3 V so that the transistor is biased off. When transistor **168** is non-conducting, timer IC **119** is enabled, and the fragrance pump operates normally.

In the NIGHT position, mode switch pole **108A** connects the base of transistor **168** to +3 V supply **162** through 2.2K resistor **171**. Mode switch pole **108B** connects the base of transistor **168** to secondary ground **164** through 100K resistor **172** an cadmium sulfide (CdS) photocell **90** in parallel.

PNP transistors **168** and **169** form a pair of cascaded inverting switches which couple the previously described mode switch and light sensing circuitry to the active-low reset signal **173** for timer IC **119**. (When reset signal **173** is active, the output of timer IC **119** is inhibited, and the fragrance pump cannot operate.) 10K resistor **174** connects the collector of transistor **168** to secondary ground **164** and acts as a collector load. 4.7K resistor **176** couples the collector of transistor **168** to the base of transistor **169**. The emitter of transistor **169** is connected to +3 V supply **162**. 2.2K resistor **170** connects the collector of transistor **169** to secondary ground **164** and acts as a collector load. The reset signal **173** for timer IC **119** is connected to the collector of transistor **169**.

When transistor **168** is biased off, the base of transistor **169** is essentially coupled to ground via resistors **174** and **176** for a total resistance of 14.7K. Current flows out of the base of transistor **169** causing it to conduct. Transistor **169** collector current causes a voltage drop across resistor **170**, and reset signal **173** for timer IC **119** assumes a high level, its inactive state. Thus, when transistor **168** is biased off, timer IC **119**, and the fragrance pump it controls, operate normally.

When transistor **168** is biased on, the base of transistor **169** is essentially coupled to the +3 V supply **162**, causing it to switch off. Reset signal **173** for timer IC **119** is pulled down to secondary ground **164** by resistor **170** and is thus at a low level, its active state. When reset signal **173** is active, the output of timer IC **119**, and the fragrance pump it controls, is inhibited.

Timer IC **119** is a commercially available 7555 CMOS timer IC used in its monostable or "one-shot" mode. Timer **119** is connected to +3 V supply **162** and secondary ground **164**. A 10 IF electrolytic capacitor **141** is connected between +3 V supply **162** and secondary ground **164** near IC **119** to bypass switching transients. When timer **119** receives a trigger pulse on its active-low trigger input **184**, it produces a brief active-high output pulse on its output line **186** (provided reset signal **173** is inactive). The length of the output pulse is approximately 0.6 sec. and is a function of an R C time constant determined by 680K resistor **180** and 1 uF capacitor **182**. This output pulse is amplified and used to drive fragrance pump motor **64**.

Timer IC **119** receives trigger pulses generated by oscillator-divider IC **138** on approximately 15-minute intervals. IC **138** is a commercially available MC 14541 CMOS oscillator-divider device. IC **138** receives power from the +9 V supply lead **144**. A **0.1** uF disk capacitor **199** is used to bypass switching transients generated in IC **138** to ground. The oscillator portion of IC **138** uses a 150K resistor **200**, a 0.1 uF disk capacitor **202**, a 100K variable resistor **204** and a 47K resistor **206** to determine the oscillator frequency. The oscillator output is available at pin **3** of IC **138**. An internal connection is provided in IC **138** to a divider chain which divides the oscillator frequency. Variable resistor **204** should be adjusted to produce an oscillator frequency of 31.2 Hz, in order to produce an output frequency of 1/900 Hz (i.e. one cycle per 15-minute interval).

The output of oscillator-divider IC **138** appears on pin **8** as a 1/900 Hz square-wave. A characteristic of timer IC **119** is that once triggered, the trigger input must be negated before the output will be negated. Used directly, the output of oscillator-divider IC **138** would provide a 450 sec trigger pulse, which would interfere with the proper operation of timer IC **119**. A 0.1 uF disk capacitor **210** couples the output of IC **138** to the trigger input **184** of timer IC **119**, to narrow the trigger pulse to a period much shorter than IC **119**'s time constant of 0.6 sec. 22K resistor **222** is used as a pull-up resistor between trigger input **184** and +3 V supply **162**.

Thus, timer IC **119** receives a trigger pulse from IC **138** once every 15 minutes, and when not disabled by the mode switch and light sensing circuitry, it produces in response a 0.6 sec. output pulse used to drive fragrance pump motor **64**. This output pulse is available on pin **3** of IC **119** (lead **186**). NPN transistor **230** (type 2N3904) and PNP transistor **232** (type 2N4403) are cascaded to amplify timer IC **138** output **186** to provide sufficient current to operate fragrance pump motor **64**. A 200 Ohm resistor **234** couples timer IC **138** output **186** to the base of transistor **230**. A 10K resistor **236** couples the collector of transistor **230** to +3 V supply **162** and serves as a load resistor. A 100 ohm resistor **238** couples the collector of transistor **230** to the base of transistor **232**. Fragrance pump motor **64** is connected as a load between the collector of transistor **232** and secondary ground **164**.

Light emitting diode (LED) driver IC **146** operates an LED indicator **92** to show that power switch **110** is ON and D-cells **35A**, **35B** are sufficiently fresh to operate the fragrance pump motor **64** and associated circuitry **122**. IC **146** is a commercially available type LM3909 flasher-driver circuit which alternately supplies power to and removes power from LED **92**, causing it to flash. Capacitor **240** (47 uF, electrolytic) determines the rate at which LED **92** flashes. Flasher IC **146** obtains its positive power supply from the +3 V supply **162**.

Flasher **146** obtains its negative power supply from secondary round **164** through transistor **145**. This permits transistors **142** and **145**, arranged to sense the voltage on the +3 V supply **162**, to enable flasher **146** only when this voltage exceeds a predetermined threshold. A 39K resistor **242**, a 1K resistor **244**, and a 1K variable resistor **246** form a voltage divider that sets the bias on the base of NPN transistor **142** to determine the switching threshold. The charge-voltage relationships of commercial D-cells vary according to the chemical system and construction used. Variable resistor **246** permits adjustment of the threshold according to the type of D-cell in use. A 1K resistor **248** couples the emitter of transistor **142** to secondary ground **164**. A 100K resistor **250** couples the collector of transistor **142** to the +3 V supply **162**. The collector of transistor **142** directly drives the base of transistor **144**.

The Pump Operation Counting Circuit **124** provides a visual indication that the fragrance container probably has been exhausted. This circuit counts operations of the fragrance pump, and operates a visual indicator **88** after 3072 such operations.

In brief, IC **322** is a multi-stage binary counter which counts each fragrance pump operation pulse from timer IC **119** and supplies a binary value representing the number of received pulses on its output terminals. Devices **324** and **326** are D-type flip-flops which recognize when counter **324** has received 3072 pulses. If the mode switch **108** is set for continuous operation, assuming an interval of 15 minutes per pulse, 3072 pulses represent a period of 32 days. When this event occurs, flip-flop **326** turns on flasher IC **328**. IC **328** is a commercially available circuit which alternately supplies power to and removes power from the light emitting diode (LED) indicator **88**, causing it to flash.

In more detail, counter IC **322** receives output pulses from timer IC **119** through NPN transistor **330**. Timer IC **119** operates from the +3 V supply **162** (a 0.1 uF disk capacitor **323** eliminates switching transients), but counter IC **322** operates from the +9 V supply **144**. Transistor **330** shifts output pulses from IC **119** to a level compatible with the clock input of IC **322**. A 2.2K resistor **312** and a 22K resistor **332** form a voltage divider to couple the output signal **186** from IC **119** to the base of transistor **330**. A 100K resistor **336** couples the collector of transistor **330** to the +9 V supply and serves as a load. The collector of transistor **330** is connected to the clock input of counter IC **322**.

IC **322** is a commercially available type MC14040 stage binary counter circuit. Counter **322** presents a binary value equal to the number of pulses received from timer **119** on its output terminals. In this circuit, only output bits **11** (signal **340**) and **12** (signal **342**) are needed; the other available outputs are unused. Devices **324** and **326** are each half of a commercially available type MC14013 dual D-type flip-flop IC, used to recognize that counter **322** has reached 3072 counts.

Switch **102**, a momentary contact switch, is actuated by the user to reset the 3072-count interval. When actuated, this switch asserts signal **346**, resetting counter **322** and flip-flops **324** and **326**. Diodes **350** and **352** provide isolated reset signal **347** to counter **322** to prevent damage to output transistors in counter **322** when switch **324** is actuated. Resistors **349** and **348** are pull-down resistors which negate signals **346** and **347** respectively when the switch **324** is not actuated. Starting from its initialized state, counter **322** counts pulses from timer **119**. When counter **322** has received **2048** pulses, it asserts output bit **12** (signal **342**), causing flip-flop **324** to propagate data from its wired-high D input to the output. This asserts signal **354**, the D input of flip-flop **326**. When counter **322** has received **3072** pulses, it asserts output bit **11** (signal **340**), causing flip-flop **326** to clock the "high" on its D input to the output, asserting signal **356**.

IC **328**, a commercially available type LM3909 flasher circuit, obtains its negative power supply from secondary ground **164** through transistor **360**. Asserted signal **356** from flip-flop **326** provides drive current through resistor **362** to the base of transistor **360**, causing it to conduct and enabling flasher **328**. Flasher circuit **328** alternately supplies power to and removes power from LED **88**, causing it to flash. Capacitor **364** determines the rate at which LED **88** flashes. Flasher **328** obtains its positive power supply from the +3 V supply **162**.

While other embodiments will become apparent to those skilled in the art, it is the intent that this application be limited solely by the appended claims.

We claim:

1. An apparatus and controlling circuitry for periodically operating an aerosol container at discrete dispensing intervals to disperse a discrete quantity of the aerosol contents thereof, including powered means for periodically actuating an aerosol dispensing means of said container, said circuitry controlling said powered means for a predetermined number of actuations, and first warning means for indicating the probable total evacuation of container contents and the necessity for termination of said dispensing operation when the actuation count reaches said predetermined number, and further including mode switching means for setting said circuitry into a plurality of different operating modes, said plurality of different operating modes comprising at least three modes, including a continuous intermittent operation, a controlled daytime operation, and a controlled night operation.

2. Apparatus of the type claimed in claim 1 wherein said apparatus includes internal power source means for activating said powered means periodically to dispense said aerosol, means for measuring the power of said internal power source means, and second warning means for indicating whether said measured power is sufficient to activate said powered means.

3. Apparatus of the type claimed in claim 1 wherein said continuous intermittent operation provides an unbroken series of intermittent disbursements of aerosol spray material from said aerosol dispensing means regardless of the presence or absence of ambient light surrounding said apparatus until total evacuation of said container contents is reached.

4. Apparatus of the type claimed in claim 1 wherein said apparatus includes means for measuring the intensity of ambient light, and said controlled daytime operation mode includes circuitry which provides said periodic actuation of said aerosol dispensing means in the presence of ambient light having an intensity exceeding a predetermined threshold.

5. Apparatus of the type claimed in claim 1 wherein said apparatus includes an ambient light sensing means for measuring the intensity of ambient light, and said controlled night operation mode includes circuitry which provides inactivation of said aerosol dispensing means in the presence of ambient light having an intensity less than a predetermined threshold.

6. Apparatus of the type claimed in claim 1 wherein said powered means includes a motor operatively coupled to a power transmission unit for sending periodic power to a cam unit, and a cam unit operatively coupled to said power transmission unit for periodically engaging said dispensing means on said aerosol container for releasing the contents in said container at said discrete dispensing internals.

7. Apparatus of the type claimed in claim 1 wherein said apparatus and controlling circuitry are contained within a rigid housing openable at the front, said housing having a front cover openably fastened in assembled relation to the lower end of said housing, said housing further including an upper cover containing a plurality of apertures for exposing light sensing means and said warning means.

8. Apparatus of the type claimed in claim 1 wherein said circuitry includes a reset switch for reactivating said first warning means when a dissipated aerosol container is replaced with a full container.

9. Apparatus of the type claimed in claim 1 wherein said first warning means comprises a light emitting diode.

10. Apparatus of the type claimed in claim 1 wherein said circuitry includes means for establishing a new predetermined number of actuations and termination of dispensing operation.

11. Apparatus of the type claimed in claim 7 wherein said housing further includes a platform spaced from the top and bottom of said housing for supporting an aerosol container, and rib means integral within said housing for embracing and rigidly locating said aerosol container.

12. Apparatus of the type claimed in claim 11 wherein the upper interior of said housing includes said circuitry, a motor operatively coupled to a power transmission unit for sending periodic power to a cam unit, and a cam unit operatively coupled to said power transmission unit for periodically engaging said dispensing means on said aerosol container, and cavities within said housing containing battery devices for actuating said motor and said circuitry.

13. Apparatus of the type claimed in claim 1 wherein said circuitry includes means for adjusting the time interval between periodic actuations of said aerosol dispensing means.

14. Apparatus of the type claimed in claim 13 wherein the time interval can be adjusted between predetermined limits.

15. An apparatus and controlling circuitry for periodically operating an aerosol container at discrete dispensing intervals to disperse a discrete quantity of the aerosol contents thereof, including powered means for periodically actuating an aerosol dispensing means of said container, said circuitry controlling said powered means for a predetermined number of actuations and including means counting the actuations, and first energizing means coupled to first warning means for energizing said first warning means when the actuation count reaches said predetermined number to thereby indicate the probable total evacuation of container contents and the necessity for termination of said dispensing operation, and further including mode switching means for setting said circuitry into a plurality of different operating modes, said plurality of different operating modes comprising at least three modes, including a continuous intermittent operation, a controlled daytime operation, and a controlled night operation.

16. Apparatus of the type claimed in claim 15 wherein said apparatus includes internal power source means for activating said powered means periodically to dispense said aerosol, means for measuring the power of said internal power source means, and second energizing means coupled to second warning means for energizing said second warning means to indicate whether said measured power is sufficient to activate said powered means.

17. Apparatus of the type claimed in claim 15 wherein said continuous intermittent operation provides an unbroken series of intermittent disbursements of aerosol spray material from said aerosol dispensing means regardless of the presence or absence of ambient light surrounding said apparatus until total evacuation of said container contents is reached.

18. Apparatus of the type claimed in claim 15 wherein said apparatus includes means for measuring the intensity of ambient light, and said controlled daytime operation mode includes circuitry which provides said periodic actuation of said aerosol dispensing means in the presence of ambient light having an intensity exceeding a predetermined threshold.

19. Apparatus of the type claimed in claim 15 wherein said apparatus includes an ambient light sensing means for measuring the intensity of ambient light, and said controlled night operation mode includes circuitry which provides inactivation of said aerosol dispensing means in the presence of ambient light having an intensity less than a predetermined threshold.

20. Apparatus of the type claimed in claim 15 wherein said powered means includes a motor operatively coupled to a power transmission unit for sending periodic power to a cam unit, and a cam unit operatively coupled to said power transmission unit for periodically engaging said dispensing means on said aerosol container for releasing the contents in said container at said discrete dispensing internals.

21. An apparatus and controlling circuitry for periodically operating an aerosol container at discrete dispens-

ing intervals to disperse a discrete quantity of the aerosol contents thereof, including powered means for periodically actuating an aerosol dispensing means of said container, said circuitry including means counting the actuations of said powered means for a predetermined number of actuations, and first energizing means coupled to first warning means for energizing said first warning means when the actuation count reaches said predetermined number to thereby indicate the probable total evacuation of container contents and the necessity for termination of said dispensing operation, and further including mode switching means for setting said circuitry into a plurality of different operating modes, said plurality of different operating modes comprising at least three modes, including a continuous intermittent operation, a controlled daytime operation, and a controlled night operation.

22. Apparatus of the type claimed in claim **21** wherein said apparatus includes internal power source means for activating said powered means periodically to dispense said aerosol, means for measuring the power of said internal power source means, and second energizing means coupled to second warning means for energizing said second warning means to indicate whether said measured power is sufficient to activate said powered means.

23. Apparatus of the type claimed in claim **21** wherein said continuous intermittent operation provides an unbroken series of intermittent disbursements of aerosol spray material from said aerosol dispensing means regardless of the presence or absence of ambient light surrounding said apparatus until total evacuation of said container contents is reached.

24. Apparatus of the type claimed in claim **21** wherein said apparatus includes means for measuring the intensity of ambient light, and said controlled daytime operation mode includes circuitry which provides said periodic actuation of said aerosol dispensing means in the presence of ambient light having an intensity exceeding a predetermined threshold.

25. Apparatus of the type claimed in claim **21** wherein said apparatus includes an ambient light sensing means for measuring the intensity of ambient light, and said controlled night operation mode includes circuitry which provides inactivation of said aerosol dispensing means in the presence of ambient light having an intensity less than a predetermined threshold.

* * * * *