(12) STANDARD PATENT (11) Application No. **AU 2007273728 B2**
(19) AUSTRALIAN PATENT OFFICE

(54) Title
Cell or tissue cultivation apparatus and method of cultivation

(51) International Patent Classification(s)
C12M 3/00 (2006.01)

(21) Application No: **2007273728** (22) Date of Filing: **2007.06.20**

(87) WIPO No: **WO08/007525**

(30) Priority Data

(31) Number	(32) Date	(33) Country
2006-189733	**2006.07.10**	**JP**

(43) Publication Date: **2008.01.17**
(44) Accepted Journal Date: **2011.10.20**

(71) Applicant(s)
Takagi Industrial Co. Ltd.

(72) Inventor(s)
Watanabe, Setsuo

(74) Agent / Attorney
Spruson & Ferguson, Level 35 St Martins Tower 31 Market Street, Sydney, NSW, 2000

(56) Related Art
JP 10-155475
WO 2003/029398
US 20040235153
EP 0441639
US 5406853

(12) 特許協力条約に基づいて公開された国際出願

(19) 世界知的所有権機関
国際事務局

(43) 国際公開日
2008 年1 月17 日 (17.01.2008)

PCT

(10) 国際公開番号
WO 2008/007525 A1

(51) 国際特許分類:
C12M 3/00 (2006.01) *C12N 5/06* (2006.01)

(21) 国際出願番号: PCT/JP2007/062409

(22) 国際出願日: 2007 年6 月20 日 (20.06.2007)

(25) 国際出願の言語: 日本語

(26) 国際公開の言語: 日本語

(30) 優先権データ:
特願2006-189733 2006 年7 月10 日 (10.07.2006) JP

(71) 出願人 (米国を除く全ての指定国について): 高木産業株式会社 (TAKAGI INDUSTRIAL CO., LTD.) [JP/JP]; 〒4178505 静岡県富士市西柏原新田２０１番地 Shizuoka (JP).

(72) 発明者; および
(75) 発明者/出願人 (米国についてのみ): 渡辺 節雄 (WATANABE, Setsuo) [JP/JP]; 〒4178505 静岡県富士市西柏原新田２０１番地高木産業株式会社内 Shizuoka (JP).

(74) 代理人: 畝本 正一 (UNEMOTO, Shoichi); 〒1670032 東京都杉並区天沼三丁目２９番９号 畝本特許事務所 Tokyo (JP).

(81) 指定国 (表示のない限り、全ての種類の国内保護が可能): AE, AG, AL, AM, AT, AU, AZ, BA, BB, BG, BH, BR, BW, BY, BZ, CA, CH, CN, CO, CR, CU, CZ, DE, DK, DM, DO, DZ, EC, EE, EG, ES, FI, GB, GD, GE, GH, GM, GT, HN, HR, HU, ID, IL, IN, IS, KE, KG, KM, KN, KP, KR, KZ, LA, LC, LK, LR, LS, LT, LU, LY, MA, MD, ME, MG, MK, MN, MW, MX, MY, MZ, NA, NG, NI, NO, NZ, OM, PG, PH, PL, PT, RO, RS, RU, SC, SD, SE, SG, SK, SL, SM, SV, SY, TJ, TM, TN, TR, TT, TZ, UA, UG, US, UZ, VC, VN, ZA, ZM, ZW.

(84) 指定国 (表示のない限り、全ての種類の広域保護が可能): ARIPO (BW, GH, GM, KE, LS, MW, MZ, NA, SD, SL, SZ, TZ, UG, ZM, ZW), ユーラシア (AM, AZ, BY, KG, KZ, MD, RU, TJ, TM), ヨーロッパ (AT, BE, BG, CH, CY, CZ, DE, DK, EE, ES, FI, FR, GB, GR, HU, IE, IS, IT, LT, LU, LV, MC, MT, NL, PL, PT, RO, SE, SI, SK, TR), OAPI (BF, BJ, CF, CG, CI, CM, GA, GN, GQ, GW, ML, MR, NE, SN, TD, TG).

添付公開書類:
— 国際調査報告書

２文字コード及び他の略語については、定期発行される各*PCT*ガゼットの巻頭に掲載されている「コードと略語のガイダンスノート」を参照。

(54) **Title:** CELL OR TISSUE CULTIVATION APPARATUS AND METHOD OF CULTIVATION

(54) **発明の名称:** 細胞又は組織の培養装置及び培養方法

(57) **Abstract:** An apparatus for, and method of, cultivation of a culture of cell line, tissue, etc. There is provided an apparatus comprising incubator part (4) for accommodating of a culture and, passing through the incubator part within and without, lever (70) capable of circular arc motion around the center of a supporting point set in a wall part of the incubator part or in the vicinity thereof, which apparatus is so structured as to impart displacement to the culture through manipulation of the lever. Bending force can be applied to the culture of cell line, tissue, etc. (cell constitution (6)), so that without any increase or decrease of culture fluid (48) within the incubator part, namely, without any increase or decrease of pressure on the culture fluid, displacement required for cultivation can be imparted to the culture within the incubator part. By curving, there are brought about continuous compression and extension in the direction of thickness from a concave portion to convex portion thereof.

(57) 要約: 細胞や組織等の培養物の培養装置及び培養方法に関し、培養物を収容する培養器部（４）と、培養器部の内外に貫通させ、培養器部の壁部又はその近傍に設定された支点を中心に円弧運動することが可能なレバー（７０）とを備え、レバーを操作して培養物に変位を付与する構成である。細胞や組織等の培養物（細胞構成体６）に曲げ力を作用させることができ、培養器部内の培養液（４８）の増減を伴うことなく、即ち、培養液に対する圧力を増減させることなく、培養器部内の培養物に対して培養に必要な変位を付与し得る。湾曲させることにより、その凹の部分から凸の部分の厚み方向に連続的な圧縮と伸長とを生じさせている。

WO 2008/007525 A1

2007273728 30 Sep 2009

DESCRIPTION

CELL OR TISSUE CULTIVATION APPARATUS AND METHOD OF CULTIVATION

TECHNICAL FIELD

[0001] The present invention relates to cultivation of a cell or tissue in the fields of regeneration medicine and tissue engineering, and relates to a method of three dimensional tissue cultivation for three dimensional tissue or organ regeneration. The present invention also relates to a cultivation apparatus and a cultivation method that may be used in cultivation of one or more of a cell, a cell scaffold and a cell-generated ECM (extracellular matrix), as a cell construct. The above cultivating method may also involve addition of a culture fluid, other additives, a growth factor, a chemical and so on.

[0002] In short, the cultivation apparatus and cultivation method of the present invention differ from conventional static cultivation. The cultivation apparatus and cultivation method of the present invention involve an apparatus relating to three dimensional cultivation employing physical action. The cultivation apparatus is for creating regeneration tissue by promotion of differentiation or deterrence thereof along with growth, cell migration and substance migration promoted by stimulating a cell of a cell construct aggressively and distorting a cell construct.

BACKGROUND ART

[0003] For cultivation of a cell or tissue, a method for imparting physical stimulation such as pressure and tension to a cell or tissue to be cultivated is described, and various bioreactors and so on are suggested. Two-dimensional cultivation (plane cultivation) is a cultivation method using a flat bottomed culture carrier, and in general, is static cultivation in an incubator. Suspension cultivation is a method of cultivating a non-adherent cell being suspended. This method is also static cultivation in an incubator.

2007273728 30 Sep 2009

Three-dimensional cultivation is a method that is generally executed such that a cell scaffold where a cell is disseminated is left still in an incubator to be cultivated. Typically in three-dimensional cultivation (using a bioreactor) a cell is made to adhere to or is enclosed by a cell scaffold prior to exposure to a circulating culture fluid and so on. It is conceived that in three-dimensional cultivation of a cell scaffold, physical action such as pressure, compression, tension and shear are imparted to a cell.

[0004] A cultivation apparatus for imparting physical action is called "a bioreactor", "a tissue engineering processor", etc. Such apparatus is expected to be brought into practical utilization as a cell/tissue cultivation apparatus in vitro for cultivation experiments of tissue engineering and regeneration medicine.

[0005] Patent Document 1 discloses such bioreactors, methods and apparatus for cultivating a cell or tissue, and imparting physical displacement, stress and stimulation used in the cultivation, as an example of using pressure and oscillation (supersonic wave). Patent Document 2 discloses a method for in vivo, ex vivo and in vitro, repair and regeneration of cartilage and collagen, and bone remodeling, as an example of using pressure. Patent Document 3 discloses a cell and tissue-cultivating apparatus, as an example of using shear force. Patent Document 4 discloses a cell and tissue-cultivating device, as an example of using tensile force. Patent Document 5 discloses a cell and tissue cultivation apparatus, as an example of using compression force. Patent Document 6 discloses a device for cultivating a cell, as an example of using shear force. Patent Document 7 discloses a loading device for extending and contracting stimulation for cultivating a cell by using a silicone belt, as an example of using tensile force. Patent Document 8 discloses an apparatus executing sterilization, inoculation, cultivation, preservation, transport and test of tissue and a synthetic or natural vascular graft, and a method therefor, as an example of using both tension and shear. A cultivation

2007273728 30 Sep 2009

method where distortion is given to cells held on membranes by the membranes is disclosed in Patent Document 9. A semi-permeable membrane being used for cultivation is disclosed in Patent Document 10 and Patent Document 11. Imparting of various kinds of physical action and stimulation, and use of a semi-permeable membrane are described for cultivation of a cell, etc.

Patent Document 1: Japanese Laid-open Patent Publication No. 2001-238663 (Abstract, etc.)
Patent Document 2: Published Japanese Translations of PCT International Publication for Patent Application No. 2004-512031 (Abstract, etc.)
Patent Document 3: Japanese Laid-open Patent Publication No. 2002-315566 (Abstract, etc.)
Patent Document 4: Japanese Laid-open Patent Publication No. 2003-061642 (Abstract, etc.)
Patent Document 5: Japanese Laid-open Patent Publication No. 2003-180331 (Abstract, etc.)
Patent Document 6: Japanese Laid-open Patent Publication No. H09-313166 (Abstract, etc.)
Patent Document 7: Japanese Laid-open Patent Publication No. H10-155475 (Abstract, etc.)
Patent Document 8: Published Japanese Translations of PCT International Publication for Patent Application No. H11-504216 (Abstract, etc.)
Patent Document 9: Japanese Laid-open Patent Publication No.JP 2005-143343 (Abstract, etc.)
Patent Document 10: International Publication Pamphlet No. WO 2006/015304 A2 (Abstract, etc.)
Patent Document 11: Published Japanese Translations of PCT International Publication for Patent Application No. 2000-513214 A (Abstract, etc.)

DISCLOSURE OF INVENTION
PROBLEM TO BE SOLVED BY INVENTION

[0006] There are regions receiving many kinds of stress in

2007273728 30 Sep 2009

the human body. Tissue used for repairing these regions is different according to the regions. For example, a disc, a meniscus, a bone, cartilage fibre and a heart valve receive bending force in vivo. This bending stress is different from simple pressure, compression, tension, shear, etc. Tissue cultivated using a stimulus factor such as simple pressure, compression, tension and shear is inappropriate for application to a body region receiving such bending force.

[0007] The inventors have discovered that bending imparted as stimulation or a load to a cell or tissue under cultivation is useful for growth, etc. of that cell or tissue. This is not disclosed in patent documents 1-11, and is not also suggested therein.

[0008] An object of the present invention relates to a cultivation apparatus and a cultivation method for a culture comprising a cell and/or tissue, and is to provide an apparatus and a method for cultivating a cell and/or tissue appropriate for a given region of a body of a human being and so on.

[0009] Another object of the present invention relates to a cultivation apparatus for a cell and/or tissue appropriate for a given region of a body of a human being, etc., and to provide cultivation of an appropriate cell and/or tissue by curving, or extending and compressing a culture.

MEANS FOR SOLVING PROBLEM

[0010] To achieve one or more of the above objects, a cultivation apparatus of the present invention can apply bending force to a culture comprising a cell and/or tissue, so that displacement required for cultivation can be imparted to the culture in the incubator unit without any increase or decrease in the amount or pressure of the culture fluid in the incubator unit, . For example, by providing a bending action, continuous trans-sectional compression and extension of the cell culture may be generated. By applying physical stimulation or a load not attained by conventional pressurization, shear and tension to a culture, a culture appropriate for restoration of tissue at a region associated

2007273728 10 Mar 2011

with bending may be created. The present invention is not limited to such bending, and motion, stimulation, etc. that are necessary for cultivation can be imparted to a culture without any increase or decrease in amount or pressure of a culture fluid in an incubator unit.

[0011] Herein disclosed is a cultivation apparatus for a culture comprising a cell and/or tissue, the apparatus comprising an incubator unit that accommodates the culture; and a lever that extends from the outside of the incubator unit into the inside thereof, wherein displacement is imparted to the culture by operating the lever. From such structure, the above objects can be achieved.

[0011a] To achieve the above object, in the above cultivation apparatus, preferably, the lever may move in a circular arc around a fulcrum as a center, the fulcrum being set at a wall of the incubator unit or in the vicinity thereof. From such structure, the above objects can be achieved.

[0011b] Thus, according to a first aspect of the present invention, there is provided a cultivation apparatus for a culture including a cell and/or tissue, comprising:

an incubator unit that accommodates the culture; and

a lever that penetrates through a wall of the incubator unit, extends from the outside of the incubator unit into the inside thereof, and moves in a circular arc around a fulcrum as a center, the fulcrum being set at the wall or in the vicinity thereof,

wherein bending to the culture is repeated by movement of the lever in said circular arc, and bending displacement is imparted to the culture by said repeated bending.

[0012] Also herein disclosed is a cultivation apparatus for a culture comprising a cell and/or tissue, comprising a bed on which the culture is disposed; an

2007273728 10 Mar 2011

incubator unit that accommodates the culture with the bed; a lever that extends from the outside of the incubator unit to the inside thereof; and a driving means that pushes the bed by operating the lever, and imparts displacement to the culture by curving deformation of the bed. From such structure, the above objects can be achieved.

[0013] According to a second aspect of the present invention, there is provided a cultivation apparatus for a culture including a cell and/or tissue, comprising:

a bed on which the culture is disposed;

an incubator unit that accommodates the culture with the bed;

a lever that penetrates from the outside of a wall of the incubator unit to the inside thereof, and moves in a circular arc around a fulcrum as a center, the fulcrum being set at the wall or in the vicinity thereof; and

a driving means that repeatedly pushes the bed by movement of the lever in said circular arc, repeatedly curves and deforms the bed, and imparts bending displacement to the culture by repeating the curving deformation.

[0013a] The apparatus according to the first or second aspect, as described above, may further comprise:

a pressure apparatus that applies pressure to the inside of the incubator unit, wherein

the incubator unit includes a diaphragm, and the pressure apparatus applies the pressure to the inside of the incubator unit through the diaphragm.

[0014] Also herein disclosed is a cultivation apparatus for a culture comprising a cell and/or tissue, comprising a bed on which the culture is disposed; an incubator unit that accommodates the culture with the bed; a lever that extends from the outside of the incubator unit to an inside thereof, and can move in a circular arc around a fulcrum as a center, the fulcrum being set at a wall of the

2007273728 29 Sep 2011

incubator unit or in the vicinity thereof; and a driving means that imparts stretching force to the bed by operating the lever, and extends and contracts the culture by deformation due to extension and contraction of the bed. From such structure, the above objects can be achieved.

[0014a] According to a third aspect of the present invention, there is provided a cultivation apparatus for a culture comprising a cell and/or tissue, comprising:

a bed on which the culture is disposed;

an incubator unit that accommodates the culture with the bed;

a lever that penetrates through a wall of the incubator unit, extends from the outside of the incubator unit to the inside thereof, can move in a circular arc around a fulcrum as a center, the fulcrum being set at the wall or in the vicinity of the wall, one end of the lever being attached to one end of the bed; and

a driving means that drives another end of the level in a circular arc, imparts movement to the lever in the circular arc around the fulcrum as a center, imparts stretching force to the bed by the movement to the lever in the circular arc, and extends and contracts the culture by deformation due to extension and contraction of the bed.

[0015] Also herein disclosed is a cultivation method for a culture comprising a cell and/or tissue, comprising the steps of accommodating the culture in an incubator unit; imparting movement, to a lever extending from the outside of the incubator unit to an inside thereof, in a circular arc around a fulcrum set at a wall of the incubator unit or in the vicinity thereof; and imparting bending displacement to the culture by the movement of the lever. From such structure, the above objects can be achieved.

[0015a] According to a fourth aspect of the present invention, there is provided a cultivation method for a culture comprising a cell and/or tissue, comprising the steps of:

accommodating the culture in an incubator unit;

2007273728 10 Mar 2011

imparting movement, to a lever that penetrates through a wall of the incubator unit and extends from the outside of the incubator unit into the inside thereof, in a circular arc around a fulcrum set at the wall or in the vicinity thereof as a center;

repeating bending to the culture by movement of the lever in said circular arc; and

imparting bending displacement to the culture by said repeated bending.

EFFECTS OF INVENTION

[0016] According to the present invention, the following effects can be obtained.

[0017] (1) Displacement (stress) such as bending is applied to a culture in cultivation, and bending motion can be generated.

[0018] (2) The invention may be used for regeneration of tissue normally receiving bending force in vivo like discs, etc.

[0019] (3) The invention can be expected to prevent a stem cell from differentiating and prevent a tissue cell from dedifferentiating, and if target tissue structure and so on have directionality, uniform directionality can be imparted to a culture, and a culture equivalent to tissue in vivo can be obtained.

[0020] (4) A desired tissue can be cultivated by bending action without other kinds of physical action such as pressure, or with a minimum thereof.

[0021] (5) Cell migration can be facilitated.

[0022] (6) Nutrients and oxygen can diffuse to the interior of a three dimensional cell construct, and discharging waste products is facilitated.

2007273728 30 Sep 2009

[0023] Other objects, features and advantages of the present invention are more clearly understood by referring to the attached drawings and each of embodiments.

BRIEF DESCRIPTION OF DRAWINGS

[0024] [Fig. 1] A vertical sectional view showing a culture unit of a cultivation apparatus according to a first embodiment;

[Fig. 2] An exploded perspective view showing an incubator unit;

[Fig. 3] An exploded perspective view showing an incubator body including a cover unit;

[Fig. 4] A perspective view showing a bottom surface of a cover unit;

[Fig. 5] An exploded perspective view showing a driving unit;

[Fig. 6] A plan view showing a culture unit in a state where a cover unit is taken off from an incubator unit;

[Fig. 7] A perspective view showing an enlarged culture bed;

[Fig. 8] A view showing an actuator;

[Fig. 9] A plan view showing an actuator;

[Fig. 10] A view showing one example of a movement converting unit in an actuator;

[Fig. 11] A view showing one example of motion of a movement converting unit;

[Fig. 12] A block diagram showing one example of a control system of a cultivation apparatus;

[Fig. 13] A flowchart representing a cultivation procedure according to the invention ;

[Fig. 14A] A view showing a culture bed where a cell construct is placed;

[Fig. 14B] A view showing a culture bed where a cell construct is placed;

[Fig. 15A] A view showing bending motion to a cell construct;

[Fig. 15B] A view showing bending motion to a cell construct;

[Fig. 16] A flowchart showing operation procedure of an actuator;

[Fig. 17] A view showing a structural example of a cell

2007273728 30 Sep 2009

construct according to a second embodiment;
[Fig. 18] A view showing another structural example of a cell construct;
[Fig. 19] A view showing another structural example of a cell construct;
[Fig. 20] A view showing a cultivation system according to a third embodiment;
[Fig. 21] A block diagram showing a control system of a cultivation system;
[Fig. 22] A flowchart showing processing procedure of a cultivation system;
[Fig. 23] A view showing a culture unit of a cultivation apparatus according to a fourth embodiment;
[Fig. 24] A sectional view of Fig. 23 along an XXIV-XXIV line;
[Fig. 25] A view showing an experimental example;
[Fig. 26] A view showing an experimental example;
[Fig. 27] A view showing an experimental example;
[Fig. 28] A view showing an experimental example; and
[Fig. 29] A view showing an experimental example.

DESCRIPTION OF REFERENCE NUMERALS

[0025] 2 a culture unit
4 an incubator unit
6, 600 a cell construct
8 a driving unit
16 a culture space
48 a culture fluid
70 a lever
72 a fulcrum

BEST EMBODIMENTS FOR EXECUTING INVENTION

[0026] First Embodiment

[0027] A first embodiment of the present invention will be described with reference to Figs. 1 to 12. Fig. 1 is a vertical sectional view showing a culture unit according to a first embodiment of a cultivation apparatus, Fig. 2 is an exploded perspective view showing an incubator unit, Fig. 3 is an

2007273728 30 Sep 2009

exploded perspective view showing an incubator body including a cover unit, Fig. 4 is a perspective view showing a bottom surface of a cover unit, Fig. 5 is an exploded perspective view showing a driving unit, Fig. 6 is a plan view showing a culture unit in a state where a cover unit is taken off from an incubator unit, Fig. 7 is a perspective view showing an enlarged culture bed, Fig. 8 is an elevation view showing an actuator, Fig. 9 is a plan view showing an actuator, Figs. 10 and 11 depict an example of a movement converting unit in an actuator, and Fig. 12 depicts one example of a control system of a cultivation apparatus. In Figs. 10 and 11, the same components as an actuator of Figs. 8 and 9 are denoted by the same reference numerals.

[0028] This first embodiment shows a culture unit that imparts bending displacement to a cell construct which is a culture. This culture unit 2 includes, as shown in Fig. 1, an incubator unit 4 as a culture chamber and a driving unit 8 that imparts desired movement to a culture in incubator unit 4, for example, a cell construct 6. The structure and function of each function unit will be described, and a cultivation method will be described as follows.

[0029] A) Incubator unit (culture chamber) 4

[0030] Incubator unit 4 is a culture space for cell construct 6, and is a function unit of providing a culture fluid 48 (Fig. 6), and displacement or stimulation that is necessary for cultivation of cell construct 6. Incubator unit 4 comprises, as shown in Fig. 2, an incubator body 10, an incubator bottom 12 and a cover unit 14. The incubator body 10 may be, for example, a flat barrel, and form a cylindrical culture space 16.

[0031] Incubator bottom 12 includes a diaphragm 20 that closes culture space 16, and is attached to a bottom surface of incubator body 10 by a plurality of fixing screws 23 through a sealing means, for example, an O-ring 22. Diaphragm 20 is provided for applying pressure to culture space 16 from the outside. A barrel-shaped standing wall 24 is formed on a part of the incubator bottom 12, the part corresponding to the

2007273728 30 Sep 2009

culture space 16. A window 26 enclosed by standing wall 24 is formed. A pressure sensor 29 is disposed along with a pressure apparatus 27. Pressure apparatus 27 applies pressure P to culture space 16 via diaphragm 20 by a fluid such as water. This pressure P is detected by pressure sensor 29.

[0032] On the top of incubator body 10, as shown in Fig. 3, a window 30 is formed by a barrel-shaped standing wall 28. O-rings 32 and 34 are intervened inside and outside standing wall 28 respectively, and thereby, cover unit 14 is attachably and detachably installed to incubator body 10.

[0033] In an inner wall surface of culture space 16 of incubator body 10, shelves 38 and 40 are formed. A culture bed 36 is provided over both of shelves 38 and 40. In incubator body 10, positioning protrusions 42 and 44 (Fig. 6) are formed for culture bed 36. An edge of culture bed 36 is brought into contact with one positioning protrusion 42, and the other positioning protrusion 44 is engaged with an engaging concave depression 46 provided in culture bed 36. Thereby, culture bed 36 is positioned at a predetermined position in culture space 16, and is held attachably and detachably. That is, the height of culture bed 36 is determined by shelves 38 and 40. The horizontal position, direction and an angle thereof are determined by the positions of positioning protrusion 42 and culture bed 36, the positional relationship between positioning protrusion 44 and the engaging concave depression 46, and engagement therewith.

[0034] Culture bed 36 is also held in a fixed vertical position of culture space 16. As shown in Fig. 4, on the underside of cover unit 14, a plurality of protrusions 47 for contacting culture bed 36 are formed. Each of these protrusions 47 contact an edge of the culture bed 36, and hold culture bed 36 in position. Thus, free movement of culture bed 36 in a vertical direction is prevented.

[0035] As shown in Fig. 6, an inlet port 50 that allows inflow of culture fluid 48 to culture space 16, and an outlet port 52 that allows exhaust of culture fluid 48 from culture

2007273728 30 Sep 2009

space 16 are formed in incubator body 10. A bore 54 in inlet port 50 opens at the bottom of shelf 38 upon which culture bed 36 is placed, and communicates with a hole 56 that opens in positioning protrusion 42. A bore 58 in outlet port 52 opens at the bottom of shelf 40 upon which culture bed 36 is placed, and communicates with a hole 60 that opens in shelf 40. Therefore, culture fluid 48 supplied from inlet port 50 runs under shelf 38, runs over culture bed 36 from hole 56 of positioning protrusion 42, and reaches bore 58 via an inside of culture space 16. A part of culture fluid 48 reaches outlet port 52 from the top of culture bed 36 via hole 60 of shelf 40. A circulation pipe 51 is connected to inlet port 50, and a circulation pipe 53 is connected to outlet port 52. These circulation pipes 51 and 53 compose a circulation path for culture fluid 48.

[0036] As shown in Figs. 1, 2, 3 and 6, a connecting joint 62 is fixed to incubator body 10, by attachment screws 65. Between culture space 16 and driving unit 8, a lever 70 traverses the wall of the incubator body 10. This lever 70 can pivot in a circular arc around a fulcrum 72 (Fig. 1) as a center, fulcrum 72 being set at the wall of the incubator body 10. By driving force imparted by driving unit 8, the tip of lever 70 moves up and down. By contacting the tip of the lever 70 on the culture bed 36, the culture bed 36 can be curved, and displacement motion can be imparted to the cell construct 6 that is held by culture bed 36.

[0037] Lever 70 includes, in order of appearance from the culture space 16 side, and as shown in Fig. 3, an action part 74, a smaller diameter part 76, a larger diameter part (sealing part) 78, a flange 80, a cylinder 82 and a cone 84 whose tip is the sharpest part on lever 70. Flange 80 has a flat face at a front side when seen from the action part 74 side, and has an outwardly spherical sliding face 86 at the rear side.

[0038] A bore 88 is formed in incubator body 10 to allow lever 70 to traverse the wall of incubator body 10. Bore 88 is formed with a larger diameter at the culture space 16 side than that at the opposite side to allow lever 70 to rotate

2007273728 30 Sep 2009

in culture space 16. In order to maintain airtightness between lever 70 and the wall of incubator body 10, an O-ring 90 is provided. The center of the O-ring 90 is the center of rotation of lever 70, and constitutes the above described fulcrum 72. Between O-ring 90 and flange 80 of lever 70, an annular lever guide 92 is provided. Lever 70 pivots about the center of O-ring 90 as a center of rotation.

[0039] Connecting joint 62 is a member for connecting a frame 64 of driving unit 8 to incubator body 10. As shown in Fig. 6, connecting joint 62 is attached by attachment screws 66 and 68. A projection 96 (Fig. 3) of connecting joint 62 engages with a slot 98 (Fig. 1) corresponding to bore 88. On projection 96, an inwardly spherical sliding face 100 is provided that contacts sliding face 86 of flange 80 of lever 70. In connecting joint 62, a bore 102 is formed that has a larger diameter at an opening side than that at an opposite side to allow lever 70 to rotate.

[0040] In incubator unit 4, diaphragm 20 is, for example, formed by a flexible material such as silicone rubber that does not dissolve and is safe to use. Diaphragm 20 is formed into a thin shape, and O-ring 22 is formed therearound. The reason why diaphragm 20 is a thin membrane is for transmitting outside pressure P into culture space 16, and for making pressure in incubator unit 4 almost the same pressure as the pressure in an area beyond diaphragm 20. Lever 70 is sealed by O-ring 90, and airtightness and water-tightness of the incubator body 10 are thereby maintained.

[0041] B) Driving unit 8

[0042] Driving unit 8 is a function unit that receives driving force imparted from the outside, and drives lever 70, thereby imparting displacement motion to cell construct 6. As shown in Figs. 1 and 5, cover part 104 is fixed to frame 64 of driving unit 8 by a plurality of screws 106. Cover part 104 receives driving force via a wire 110. A first slider 112 that moves up and down is slidably attached to cover part 104. A tip of slider 112 makes contact with lever 70. In frame 64, a second slider 114 that is positioned along the same axis

2007273728 30 Sep 2009

as slider 112 is provided. Between slider 114 and frame 64, a spring 116 is provided that provides restoring force to slider 114, pushing slider 114 upward. Spring 116 thus acts as a restoring spring that returns slider 112 to its initial position.

[0043] Wire 110 is attached at its tip to slider 112. An outer tube 118 is provided around the outside face of wire 110. Wire 110 is independently slidable relative to outer tube 118. A cable 119 is composed of wire 110 and outer tube 118. Outer tube 118 traverses a fixing nut 120, and is fixed to cover part 104 by fixing nut 120. A sliding bush 122 is provided between fixing nut 120 and cover part 104, . An actuator 124 (Figs. 8 and 9) is attached to one end of wire 110 as a driving source for moving slider 112 up and down. In this case, if slider 112 is pushed down, slider 114 is pressed down along with the end of lever 70 contacted by slider 112, and if driving force of actuator 124 is released, sliders 112 and 114 return to their original positions by the restoring force of spring 116.

[0044] An opening 126 for inserting lever 70 is formed in frame 64. Guide plates 128 and 130 that guide insertion of lever 70 are inserted between sliders 112 and 114 from opening 126. If cone 84 of lever 70 is inserted between guide plates 128 and 130, lever 70 can be easily inserted into a predetermined position between sliders 112 and 114.

[0045] C) Culture bed 36

[0046] Culture bed 36 is a means for holding cell construct 6 and for transmitting displacement motion to cell construct 6, and is a function unit restoring cell construct 6 to its original state as this was before displacement motion, through the elasticity of culture bed 36. Culture space 16, for example, accommodates cell construct 6 held on culture bed 36.

[0047] A holder 136 where two cell constructs 6 are held in parallel is included in culture bed 36 as shown in Fig. 7. This holder 136 comprises a receiving part that may be deformed by external force, has an area and a shape adapted

2007273728 30 Sep 2009

for holding two cell constructs 6 in parallel, and is made in a plate form from an elastic material for imparting bending motion to each cell construct 6. As an elastic material, stainless spring steel sheet, for example, or other materials that have high spring may be used. In this case, the whole culture bed 36 may be formed by an elastic material, or holder 136 that enables bending motion or a part of holder 136 may be formed by an elastic material. Holder 136 is not limited to a flat-plated shape, and may comprise a net. Stable coating may cover holder 136 to prevent component of a spring material from dissolving or eluting.

[0048] The holder 136 may be rectangular in shape. At each longitudinal end, rectangular standing walls 138 and 140 are formed. Each of standing walls 138 and 140 is formed perpendicular to holder 136, and elliptic holes 142 are formed in standing walls 138 and 140. Holes 142 have a role of receiving and holding the ends of a cell construct 6. Each of standing walls 138 and 140 is set at a predetermined height h according to the size of each cell construct 6.

[0049] Supporting faces 144 and 146 are formed having constant width, and extend from the top of each of standing walls 138 and 140, in parallel to holder 136. From each supporting face 144 and 146, a turnover 148 is formed in parallel to each of standing walls 138 and 140 by turning a part of each supporting face 144 and 146. Each turnover 148 reinforces each supporting face 144 and 146, and each standing wall 138 and 140, and holds cell construct 6. That is, sufficient strength can be obtained if each supporting face 144 and 146, and each standing wall 138 and 140 are formed from the same board as holder 136 which is made of a thin plate, and, in the embodiment, culture bed 36 is bent only in a longitudinal direction. In culture bed 36, a U-formed engaging depression 46 corresponding to positioning protrusion 44 as shown in Fig. 6 is formed in order to hold supporting face 144 in place.

[0050] Supporting walls 152 and 154 that support the sides of cell construct 6 extend upwards from the middle edges of

2007273728 30 Sep 2009

holder 136. Holding parts 156 and 158 that cover the top surface of cell construct 6, extend inwards from the top of each supporting wall 152 and 154. Each supporting wall 152 and 154 is perpendicular to holder 136. The height thereof is the same as for the above described standing walls 138 and 140. Each holding part 156 and 158 constitutes a parallel face opposed to the surface of holder 136. Cell construct 6 is held in the gap between holder 136, and each holding part 156 and 158. An end part of each holding part 156 and 158 is provided as a curved face. Between the end parts, a gap 160 for inserting and removing cell construct 6 is set.

[0051] Components for incubator unit 4 may be selected according to stability, economics, ability to be sterilized, workability, abrasion resistance, handling qualities, etc. for a culture and a culture fluid. For components contacting a culture fluid 48, for example, the incubator body 10, the cover unit 14, the O-rings 32, 34 and 90, the culture bed 36 and the lever 70, a material of high stability that does not dissolve must be used. For example, stainless steel, plastic, etc. can be used. Stainless steel is superior in terms of stability and ability to be sterilized, and plastic is superior in terms of workability and handling qualities such as weight saving and disposability.

[0052] Plastic may be used, where there is a need to prevent contamination by germs or cells or genes of another person. Plastic is cheaper than stainless steel. The incubator unit 4 must be sterilized in an assembled state. Both stainless steel and plastic are resistant to damage from sterilization. For example, full heat-resistant characteristics are required in an autoclave that executes a sterilization process under conditions of 121 °C and 2 atmospheres pressure. For such processes, fluororesins such as PTFE, ETFE and PFA, polysulfane, polyethersulfane, polycarbonate, PET and polyethersulfane reinforced by glass, etc. are suitable. For sterilization by γ-rays or electronic rays, ETFE, polysulfane, polyethersulfane, polycarbonate, PET, polyethylene, polypropylene, etc. are suitable.

2007273728 30 Sep 2009

[0053] In incubator unit 4, abrasion resistance is required due to repeated sliding of flange 80 of lever 70 at connecting joint 62 and lever guide 92, etc.. Under these conditions, fluororesins such as polyacetal, polyethylene, polypropylene, PTFE, ETFE, and PFA are suitable.

[0054] Cover unit 14 may be formed of a transparent material to allow observation of culture space 16 without taking off cover unit 14. Transparent materials such as polysulfane, polyethersulfane, polycarbonate, PET, etc. are suitable.

[0055] In order to prevent contamination of a culture, sterilization is necessary. Selection of a material resistant to sterilization is important. Preferred materials that are resistant to sterilization by autoclave, γ-rays or electronic rays are as follows, in view of the functionality, etc. required of each component.

[0056] For the incubator body 10, incubator bottom 12 and cover unit 14, polysulfane, polyethersulfane or polycarbonate are suitable. For O-rings 32, 34 and 90, fluoro-rubber or silicone rubber are suitable. For diaphragm 20 and O-ring 22, fluoro-rubber, silicone rubber or an ETFEE film are suitable. For connecting joint 62 and lever guide 92, ETFE is suitable. For lever 70, stainless steel (SUS316 and SUS304) is suitable. For culture bed 36, stainless spring steel (a series of SUS304CSP) is suitable.

[0057] Stainless spring steel is less corrosion resistant than series SUS316. To allow for this inferior corrosion resistance, a coating such as diamond-like coating (DLC) may be applied, for example.

[0058] If reuse of components (with careful washing) is desired, stainless steel SUS316 or SUS304 may be used instead of plastic. Regarding material for culture bed 36, this needs to be suitable for bending under applied pressure, and then returning to an initial, unbent state once that pressure is removed. As such, a hard elastic material such as stainless spring steel may be used, for example.

[0059] D) Actuator 124

[0060] Actuator 124 comprises a driving source that imparts

2007273728 30 Sep 2009

driving force to lever 70 from the outside of driving unit 8. As shown in Figs. 8 and 9, actuator 124 converts rotation of a motor to back and forth movement of wire 110, and applies movement thereof to slider 112 of driving unit 8. Wire 110 of driving unit 8 connects to actuator 124 through outer tube 118, and the tip of wire 110 is attached to a crank lever 162 by a wire fixing screw 164. The outer tube 118 that covers wire 110 is held in place by a fixing part 170 of a reinforcing plate 168 attached to frame 166 of actuator 124 as a relay member.

[0061] Crank lever 162 is fixed to a crank shaft 174 via a bearing 172. A motor 178 is attached to a crank 176 to which crank shaft 174 is fixed. Motor 178 is, for example, a DC motor. Motor 178may be provided with tachometer 180.

[0062] A rotation adjuster 182, a power source switch 183, an operation switch 184, a rotation adjusting dial 186 and a display 188 that displays number of rotations, etc. are provided on frame 166 of actuator 124.

[0063] As an example showing an enlarged crank mechanism of actuator 124, as shown in Fig. 10, a crank arm 192 showing crank 176 is attached to a rotation shaft 190 of motor 178. Crank lever 162 is rotatably attached to crank arm 192 by crank shaft 174. The tip of wire 110 is attached to crank lever 162 by wire fixing screw 164.

[0064] Through such a structure, by rotation of motor 178, crank arm 192 rotates around the center of rotating shaft 190. Crank lever 162 that is attached to a tip of crank arm 192 by crank shaft 174 moves in a circular trajectory shown by dotted and dashed line X in Fig. 11. Wire 110 that is fixed to the tip of crank lever 162 moves back and forth correspondingly to a stroke 2S according to length S of the crank arm 192, and this displacement movement is imparted to driving unit 8 via wire 110. This displacement movement is transmitted to lever 70, and makes lever 70 pivot.

[0065] There is no need to rotate crank arm 192 smoothly. Displacement movement of lever 70 can also be carried out by rotating crank arm 192 by a desired angle using a stepper motor

2007273728 30 Sep 2009

or a servo motor.

[0066] A controller 200 that controls motor 178 may be provided with actuator 124, as shown in Fig. 12. Pressure apparatus 27, pressure sensor 29, motor 178, tachometer 180, rotation adjustor 182, power source switch 183, operation switch 184, display 188, etc. are connected to controller 200. In controller 200, rotational speed is set at rotation adjustor 182 by rotation adjustment dial 186. Rotation of motor 178 is set to a desired rotational speed. This rotational force is converted to back and forth movement of wire 110 to be imparted to driving unit 8. Rotation of motor 178 is detected by tachometer 180, difference between rotational speed of motor 178 and set rotational speed is calculated, and motor 178 is controlled to a predetermined rotational speed. In this embodiment, by using controller 200, output pressure P of the pressure apparatus 27 is controlled in accordance with detected pressure of pressure sensor 29. Another controller may control pressure apparatus 27, or receive data for pressure detected by pressure sensor 29.

[0067] E) Cultivation method

[0068] A cultivation method for a cell or tissue by using the culture unit 2 will be described with reference to Figs. 13-16. Fig. 13 is a flowchart showing a cultivation procedure, Figs. 14A and 14B depict placement of cell constructs 6, Figs. 15A and 15B depict imparting bending motion to a cell construct and cancellation thereof, and Fig. 16 is a flowchart showing procedure of operation of the actuator.

[0069] As shown in Fig. 13, a process for cultivation of a cell construct 6 includes preparation (step S1), a cultivation process (step S2) and a posttreatment (step S3). Preparation includes processes for forming a cell construct 6, and wrapping the cell construct 6 in a semi-permeable membrane, etc. The cultivation process includes applying a bending movement. In the cultivation process, a bending process (step S21), bending cancellation (step S22), a bending process (step S23)…bending cancellation (step S2N) are repeatedly executed. Posttreatment includes removal of

2007273728 30 Sep 2009

cultivated cell construct 6 from culture bed 36.

[0070] I Preparation (step S1)

[0071] As shown in Figs. 14A and 14B, a cell construct 6 comprising a culture is formed. Cell construct 6 may be enclosed by a semi-permeable membrane.

[0072] Cell construct 6 includes one or more of a cell, a cell scaffold, an extracellular matrix generated by the cell and a culture fluid 48. Additives may be included as other elements.

[0073] Cell construct 6 may comprise: a three dimensional scaffold within which cells are disseminated and a gel substance; a three dimensional scaffold within which cells are disseminated and which is sealed by a semi-permeable membrane; or a three dimensional scaffold within which cells are disseminated and a gel substance, both of which are sealed by a semi-permeable membrane. The three dimensional scaffold and gel substance may be composed of a bioabsorbable material.

[0074] Cell construct 6 may also: comprise a three dimensional scaffold within which cells are disseminated; comprise a complex of the construct and other scaffolds; comprise either of the above inserted into a bag or tube comprised of semi-permeable membrane; comprise a culture fluid within which cells are suspended, and which fluid is enclosed in a bag or tube comprised of semi-permeable membrane; or be cells and a gel scaffold enclosed in a bag or tube comprised of semi-permeable membrane.

[0075] Semi-permeable membranes may be selected from semi-permeable membranes whose molecular weight cut-off is from 100 (Da) to 1000 (kDa). Use of semi-permeable membranes in cultivation is described in PCT/US2005/027220 (Amorphous cell delivery vehicle treated with physical/physicochemical stimuli), etc. Semi-permeable membranes with a wide variety of molecular cut-offs are available for use. Thus, a semi-permeable membrane allowing passage of low molecular weight substances, such asnutrients, gases such as oxygen, and waste matters excreted by cells in a culture fluid, while not allowing passage of cells or polymeric extracellular

2007273728 30 Sep 2009

matrix may be selected, whereby cells are enclosed, and nutrients and oxygen can be supplied while preventing outflow of cells or extracellular matrix, and effective cultivation is realized. Bending movement applied by processes of the present invention aids in reducing or atoning for the situation where the semi-permeable membrane develops resistance to passage of nutrients. Thus, displacement of the bending part increases, and differences of pressure occur, thus, movement of nutrients is promoted. For example, a cell construct 6 within which blood vessels have not yet generated (tissue without blood vessels) may be cultivated using bending motion which functionally substitutes for a blood vessel and a heart, and simultaneously, the bending motion imparts physical stimulation to the cells.

[0076] Cell construct 6 covered by a semi-permeable membrane is, as shown in Figs. 14A and 14B, positioned and held on holder 136 of culture bed 36.

[0077] II Cultivation process (step S2)

[0078] Cell construct 6 is, as shown in Figs. 1 and 15A, transferred to incubator unit 4 that provides a culture space along with culture bed 36.

[0079] Culture fluid 48 is supplied to incubator unit 4, and cover unit 14 is attached. In the process of attaching cover unit 4, four protrusions 47 provided on the underside of cover unit 14 lightly press down on the edges of culture bed 36 and hold culture bed 36 in position.

[0080] If force F is imparted from the back of culture bed 36 by lever 70, as shown in Fig. 15B, holder 136 of culture bed 36 is curved upwardly by force F. By this curving cell construct 6 on holder 136 is also curved. As a result, bending occurs to cell construct 6.

[0081] If force F is removed, holder 136 of culture bed 36 returns to its original flat form through its elasticity. Thus, as shown in Fig. 15A, cell construct 6 on holder 136 returns to a flat state. In this context, holding parts 156 and 158 of culture bed 36 cover a top face of cell construct. Cell construct 6 that was deformed to be upwardly convex is

2007273728 30 Sep 2009

pressed against holding parts 156 and 158 in response to restoration of holder 136 to its original flat form.

[0082] This bending movement is repeated (step S21-step S2N), and tissue is formed as a predetermined cultivation time passes. If the culture unit 2 shown in Fig. 1, etc. is used, a desired pressure P can be applied to cell construct 6 separately from the bending movement, by applying a pressure P to diaphragm 20 of incubator bottom 12 via culture fluid 48.

[0083] In such a cultivation, it is possible to supply fresh culture fluid 48 to culture space 16 by supplying culture fluid 48 from inlet port 50 to culture space 16, to be exhausted via outlet port 52. Culture fluid 48 may be a supply medium that supplies gases such as oxygen and nutrients, etc. to cell construct 6, and a transmitting medium for transmitting waste matters exhausted from cell construct 6.

[0084] III Posttreatment (step S3)

[0085] Cell construct 6 is taken out of incubator unit 4 (Fig. 1, etc.) with culture bed 36 once cultivation is completed. Cell construct 6 is applied to a body region of a human being requiring structural supplementation.

[0086] Control operation of controller 200 in such a cultivation process will be described with reference to the flowchart shown in Fig. 16.

[0087] Firstly, operation switch 184 is turned on, and display 188 is illuminated (step S11), and rotational speed can then be set(step S12). As a result, rotation is started, and displacement is provided by actuator 124 via wire 110 to slider 112 of driving unit 8 (step S13). By back and forth motion of wire 110, lever 70 is pivoted and the above described movement is imparted to cell construct 6.

[0088] When rotation and displacement are generated, set rotational speed and real rotational speed are displayed on display 188 (step S14). Rotational speed difference between real rotational speed and set rotational speed is monitored via controller 200 (step S15). If the difference in rotational speeds or uneven rotation reaches or exceeds a set

2007273728 30 Sep 2009

value, this is detected as an anomaly. If an anomaly occurs, an alarm is displayed on display 188 (step S16).

[0089] Second Embodiment

[0090] A second embodiment of the present invention will be described with reference to Figs. 17 to 19. Figs. 17 to 19 illustrate structural examples of cell constructs.

[0091] Cultivation method steps for a cell and/or tissue by using such cell constructs are as follows:

[0092] a. Tissue or a cell isolated from in vivo;

b. The isolated tissue is resolved by enzymes and so on and a desired cell is selected and isolated. Any sort of cell may be cultivated;

c. If the number of selected cells is insufficient, the number of cells may be increased by monolayer cultivation and so on;

d. The cell construct is made.

i. For a construct of indeterminate shape/dimensions (a growth factor or chemical may be added to one or more of the following if necessary):

- a cell is suspended in a culture fluid
- a cell is suspended in a hydro-gel
- a cell is mixed with a gel scaffold

ii. For a construct of determinate shape/dimensions (a growth factor or chemical may be added to one or more of following if necessary):

- a cell is suspended in a culture fluid, and the culture fluid is introduced into a cell scaffold, such as a collagen sponge and a chitosan sponge, to attach the cell to the scaffold; or
- a cell in a sol state is mixed into a scaffold, and the scaffold is introduced into a cell scaffold, such as a collagen sponge and a chitosan sponge, to attach the cell to the scaffold and to fix the cell in place.

e. Cell construct 6 is created by introducing a cell, etc. into a tube or bag comprised of semi-permeable membrane and sealing the tube or bag. Cells and high molecular weight substances do not pass through a semi-permeable membrane, and low molecular weight substances, such as nutrients, chemicals

2007273728 30 Sep 2009

and gases such as oxygen in the culture fluid are able to pass through a semi-permeable membrane.

f. Cell construct 6 is attached to culture bed 36.

g. If a culture fluid is to be circulated, a circulation circuit is provided. A gas exchanger is provided with the circulation circuit, and gas in the cultivation apparatus and gas in the culture fluid can be exchanged.

h. Cell construct 6 is introduced into an incubator unit 4 with culture bed 36, and a culture fluid 48 is added.

i. A cover unit 14 is attached to incubator unit 4, and incubator unit 4 (and the culture circuit) is sealed. These procedures are executed in a clean environment such as a clean room and clean bench. As a result, since the circuit is sealed, contamination by germs is avoided.

j. A driving unit 8 is attached to incubator unit 4.

k. Temperature and gas concentration are maintained at optimal levels.

l. Bending motion is repeatedly imparted to the cell construct 6. The period, size, and motion schedule, etc. of the bending motion are set in advance of operation.

m. If desired, a culture fluid is circulated and pressure is applied. Concerning pressure, this may be selected from constant, intermittent, periodical, repeat, etc. pressure patterns.

n. After a predetermined time passes, the driving unit is removed from incubator unit 4.

[0093] In such a cultivation method, as shown in Fig. 17, cell construct 6 may be placed in a tube 202 comprised of a semi-permeable membrane . In this case, cell construct 6 is constituted of culture fluid 48 and a mixture 204 comprising gel mixed with cells. Openings of both ends of tube 202 are sealed with stoppers 206.

[0094] For example, a pair of cell constructs 6 is attached to culture bed 36, and the above described bending displacement motion is repeatedly imparted. In such a manner, cells are propagated, and an extracellular matrix and so on are generated to generate neogenetic tissue of indeterminate

2007273728 30 Sep 2009

shape/dimensions.

[0095] Before cultivation, cell construct 6 comprises a combination of all or a part of a cell, a culture fluid, a hydro gel and a gel scaffold. After cultivation, cell construct 6 has become a combination of all and a part of a cell, a culture fluid, a hydro gel, a gel scaffold, an extracellular matrix or other products of a cell.

[0096] If a resulting culture removed from cell construct 6 is introduced into a damaged or deficient body part in vivo, original tissue is regenerated at that injected body part. The injected culture integrates with surrounding tissue.

[0097] As shown in Fig. 18, cell construct 6 may be placed into a tube 202 comprised of a semi-permeable membrane. In this case, cell construct 6 is also constituted of culture fluid 48 and a mixture 204 comprising gel mixed with cells. Each end of tube 202 is doubled over and sealed by being sandwiched by clips 208 once cell construct is placed inside. In this case, tube 202 is not filled to capacity. Tube 202 is filled with culture fluid 48 and mixture 204 to the extent that the cross-section of tube 202 becomes elliptic in shape. These cell constructs 6 are attached to the above described culture bed 36, and subjected to repeated bending motion.

[0098] By using such cell constructs 6, cells are propagated, and an extracellular matrix and so on are generated to generate neogenetic tissue of indeterminate shape/dimensions. Before cultivation, cell construct 6 comprises a combination of all or a part of a cell, a culture fluid, a hydro gel and a gel scaffold. After cultivation, cell construct 6 has become a combination of all or a part of a cell, a culture fluid, a hydro gel, a gel scaffold, an extracellular matrix and other products of a cell.

[0099] If such a resulting culture is injected into a damaged or deficient body part in vivo, original tissue is regenerated at that injected body part in vivo, and the injected culture can integrates with the surrounding tissue.

[0100] As shown in Fig. 19, cell construct 6 may be placed into tube 202 comprising a semi-permeable membrane. In this

2007273728 30 Sep 2009

case, cell construct 6 comprises cells disseminated in a cell scaffold 205 of determinate shape/dimensions. Each opening at the ends of tube 202 is sealed by a stopper 206.

[0101] One or more cell constructs 6 may be arranged and attached to culture bed 36, and subjected to repeated bending motion. As a result, cells are propagated, and an extracellular matrix and so on are generated to generate neogenetic tissue of indeterminate shape/dimensions. That is, before cultivation, cell construct 6 is composed of a cell, a cell scaffold such as a collagen sponge and a gel scaffold. After cultivation, cell construct 6 comprises neogenetic tissue composed of a cell, a cell scaffold, an extracellular matrix and other products of a cell.

[0102] When the semi-permeable membrane is removed, the released neogenetic tissue may be transplanted into a damaged or deficient part of a human body by suture, adhesive, etc., and original tissue regenerated at that transplanted part, and the neogenetic tissue can be integrated into surrounding tissue.

[0103] Third Embodiment

[0104] A third embodiment of the present invention will be described with reference to Figs. 20-22. Fig. 20 depicts a cultivation system according to a third embodiment, Fig. 21 depicts a structural example of a control unit and Fig. 22 is a flowchart showing a cultivation procedure.

[0105] In a cultivation system 240, which allows for circulating a culture fluid 48 and supplying fresh culture fluid 48 at any time, a culture circuit 244 including an incubator unit 4 of a culture unit 2 is provided in a culture room 242. Culture circuit 244 comprises a circulation path that connects a culture fluid tank 248, a gas exchanger 250, a pump 252, a check valve 254, incubator unit 4 and a pressure adjusting valve 256 via a circulation tube 246. In culture circuit 244, culture fluid 48 can optionally be circulated. In one aspect of circulation control, for example, if circulation of culture fluid 48 is stopped or inhibited, culture circuit 244 may be shut. Pump 252 may comprise a

2007273728 30 Sep 2009

piston pump, a syringe pump or a peristaltic pump, etc. A flow sensor 268 that detects the flow of culture fluid 48 by a method such as counting drops of the culture fluid 48 is provided with circulation tube 246.

[0106] In culture room 242, a temperature adjustor 258, a gas concentration adjustor 260 and a controller 262 are provided. In culture room 242, the desired cultivation temperature is set by temperature adjustor 258, constant gas concentration is maintained by gas concentration adjustor 260, and circulation of culture fluid 48 and pressure in incubator unit 4 are controlled by controller 262.

[0107] Bending stress is imparted to incubator unit 4 by actuator 124 via a cable 119. In this case, actuator 124 is provided in culture room 242. Actuator 124 may be provided outside culture room 242.

[0108] Motion of actuator 124 may be controlled in combination with pressurized circulation of culture fluid 48, or controlled independently. In this case, pressure application to culture fluid 48 and bending stress by actuator 124 are imparted to the cell construct 6.

[0109] A control system may be configured to provide combined control of imparting of bending displacement to cell construct 6, circulation of culture fluid 48 and pressure in incubator unit 4, as shown in Fig. 21. In controller 262, rotational speed of motor 178 and the amount of circulation of the culture fluid 48 are set at input apparatus 264, and motor 178 and pump 252 are driven. Controller 262 is comprised of a computer including a CPU (Central Processing Unit), a ROM (Read-Only Memory) and a RAM (Random-Access Memory).

[0110] Motor 178, tachometer 180 and controller 262 execute displacement imparting control. Rotation of the motor 178 is detected by tachometer 180, and detected information is relayed to controller 262.

[0111] Pressure adjusting valve 256, pump 252, flow sensor 268 and controller 262 execute culture fluid transmission control. In this culture fluid transmission control, if rotational speed of pump 252 increases, the flow rate of

2007273728 30 Sep 2009

culture fluid 48 increases. Pressure by fluid transmission can be adjusted by pressure adjusting valve 256. Flow of culture fluid 48 is, for example, detected by flow sensor 268 by counting drops of culture fluid 48, and the flow rate is used to control parameters such as pump control.

[0112] Pressure apparatus 27, pressure sensor 29 and controller 262 execute pressure control. Pressure sensor 29 detects pressure, and by detected information, pressure control is executed.

[0113] A temperature sensor 280 and a heater 282 that constitute temperature adjuster 258, and controller 262 execute temperature adjustment control. Based on information detected by temperature sensor 280, heat generation by heater 282 is controlled. A CO_2 concentration censor 284, a CO_2 electromagnetic valve 286, an O_2 concentration sensor 288, and an N_2 electromagnetic valve 290 that constitute gas concentration adjuster 260, and controller 262 execute gas concentration control. Based on information detected by CO_2 concentration sensor 284, opening of CO_2 electromagnetic valve 286 is controlled. Based on information detected by O_2 concentration sensor 288, opening of N_2 electromagnetic valve 290 is controlled. Control of temperature and gas concentration provides control of the environment in culture room 242. That is, gas exchange in gas exchanger 250 between culture fluid 48 and culture room 242 is dependent on the gas concentration in culture room 242.

[0114] In a cultivation system 240 as shown in Fig. 22, turning on power source switch 292 (step S51) lights a display 266 (step S52). Environment control values (step S53) and control operation (step S54)values are then entered, and the set values are displayed on display 266 (step S55). Operation switch 294 is then turned on (step S56).

[0115] Once cultivation system 240 is operating, temperature adjustment (step S57), gas concentration adjustment (step S58), pressure application control (step S59), culture fluid transmission drive (step S60) and displacement imparting drive (step S61) are executed, and a

2007273728 30 Sep 2009

driving state is displayed on display 266 (step S62).

[0116] The desired displacement imparting driving state is monitored (step S63). If an anomaly arises, an alarm is displayed, drive of the system is stopped (step S64), cultivation system 240 is reset (step S65), the cause of the anomaly is removed (step S66), steps S51-S63 are executed again, and cultivation is ended (step S67). After ending cultivation, operation switch 294 is turned off (switch 68), and the cultivation process is ended (step S69).

[0117] Fourth Embodiment

[0118] A fourth embodiment of the present invention will be described with reference to Figs. 23 and 24. Fig. 23 depicts a culture unit according to a fourth embodiment, and Fig. 24 depicts a section of Fig. 23 along an XXIV-XXIV line. In Figs. 23 and 24, the same parts as those in Figs. 1-8 are denoted by the same reference numerals.

[0119] In the first to third embodiments, a process for imparting bending displacement to a cell construct 6 is described. The present invention can also apply to a process for stretching and compressing a cell construct 600. A desired displacement can be imparted to cell construct 600 without generating change of inner pressure in a culture space 16 of an incubator unit 4 by movement of a lever 70.

[0120] In incubator unit 4 of this embodiment, a rectangular culture space 16 is formed. One end of cell construct 600 is attached to a protrusion 296 that protrudes from a shelf 295 of culture space 16, and a tip of lever 70 is rotatably fixed to a holding frame 298 that is attached to the other end of cell construct 600. In this embodiment, a fixing pin 300 is protruded over the holding frame 298. An engaging ring 302 that is formed at the tip of lever 70 is removably engaged with fixing pin 300.

[0121] If lever 70 is pivoted as a result of actuator 124 (Figs. 8 and 9) applying motion to driving unit 8 via wire 110, cell construct 6 is stretched and compressed in directions of arrows m and n, and stimulation, imparting of tension and removal thereof for cultivation according to this embodiment

2007273728 30 Sep 2009

can be repeatedly executed.

[0122] Culture fluid 48 may be provided to culture space 16 from inlet port 50, and removed from outlet port 52, thereby providing fresh culture fluid 48 to cell construct 600.

[0123] Features derived from the embodiments

[0124] Features derived from the embodiments described above, but not explicitly described in the claims are as follows. Listed features do not limit the present invention.

[0125] (1) The above cultivation apparatus, wherein the bed and the lever are disposed in parallel or perpendicularly.

[0126] (2) The above cultivation apparatus, wherein the incubator unit comprises a sealed structure.

[0127] (3) The above cultivation apparatus, wherein an edge of the lever has an action unit.

[0128] (4) The above cultivation apparatus, wherein the bed holds a culture, bends by receiving pressure from the lever and returns to its original state by removing the pressur.

[0129] (5) The above cultivation apparatus, wherein the bed comprises a holding portion, at an edge of the bed, that the incubator unit holds, and a receiving portion, at a middle part of the bed, that receives action from the lever.

[0130] (6) The above cultivation apparatus, wherein the lever comprises a flange that has a circular arc face in the vicinity of the fulcrum, and the connecting joint has a circular arc face corresponding to the flange face included in the incubator unit, and the circular arc face of the flange and the circular arc face of the connecting joint part are slidably contacted.

[0131] (7) The above cultivation apparatus, wherein in the connecting joint, when the lever is pivoted, the center of rotation of the lever corresponds with the center of the sealing part of the lever.

[0132] (8) The above cultivation apparatus, wherein a driving unit that imparts driving force to a rear end of the lever protruding from the incubator unit is provided at

2007273728 30 Sep 2009

a side of the incubator unit.

[0133] (9) The above cultivation apparatus, wherein the driving unit is removably attached to the incubator unit.

[0134] (10) The above cultivation apparatus, comprising a controller that controls application of pressure by the driving unit to the lever periodically or continuously, and/or controls the rate of pressure application.

[0135] (11) The above cultivation apparatus, wherein a culture fluid is supplied to the incubator unit through a supplying port and removed through an exhaust port.

[0136] (12) A cultivation apparatus comprising a diaphragm in an incubator unit, wherein pressure can be applied into the incubator unit via the diaphragm.

[0137] (13) The above cultivation apparatus, wherein the driving unit comprises a housing unit that is placed at a side of the incubator unit,
a first slider that is slidably held in the housing, slides by driving force applied from the outside, and applies pivoting motion to the lever, and
a second slider that is slidably held in the housing, and provides restoring force to the lever in the opposite direction from the slider.

[0138] (14) The above cultivation apparatus, wherein the housing comprises an insertion port into which the lever is inserted, and
a guide part that guides the inserted end of the lever from the insertion port to a position between the first slider and the second slider.

[0139] Result of Experiment

[0140] Results of an experiment using the above cultivation apparatus and cultivation system will be described with reference to Figs. 25 to 29.

[0141] Fig. 25 shows a cell construct. This cell construct is prepared by introducing a cell suspended in a culture fluid into a tube comprised of a semi-permeable membrane. As shown in Fig. 26, the cell construct is attached to a culture bed, and is placed in an incubator unit (chamber). In Fig. 26, the

2007273728 30 Sep 2009

driving unit is separated from the incubator unit and not shown.

[0142] Pressure from an actuator acts on the culture unit, and bending motion is imparted to the cell construct. The actuator is placed outside the culture room. A cable passing through a door of the culture room is connected to the driving unit. Operation status of the actuator could be confirmed by a display.

[0143] The actuator converts the rotational movement of a motor to linear movement via a crank. By selection of the length of the crank arm, the amplitude of back and forth movement of the wire can be adjusted, and in accordance with this selection, the magnitude of bending imparted to the cell construct can be adjusted.

[0144] In this experiment, application of pressure is limited to bending motion, atmospheric pressure is maintained constant and the culture fluid is circulated. Pressure and bending motion by the actuator are imparted independently of one another. In the experiment, for example, pressure equal to or over 0.5 (MPa) may be imparted.

[0145] Figs. 27 to 29 show an experiment comprising cultivation of a vertebra from a two days old mouse. In the experiment, a vertebra extracted from a two days old mouse was placed on the culture bed (Fig. 27) and bending motion of 0.1 (Hz) frequency was imparted to the culture during cultivation for ten days. In this experiment, no pressure was applied.

[0146] As a comparison example, static cultivation was executed. Fig. 28 shows the results for static cultivation for ten days. After ten days, a section of is the vertebra was stained with toluidine blue, and cell viability was observed. In Fig. 28, no staining was observed: areas of reduced brightness (which are stained) are indicative of cell viability. In the results for static cultivation, cell density inside discs did not increase, and displacement of matrices can be seen (a of Fig. 28).

[0147] However, in vertebrae where bending motion and

2007273728 30 Sep 2009

displacement were imparted, growth of cells and neogenetic matrices inside discs could be seen. (b of Fig. 29).

[0148] From the results of the experiment, it can be seen that imparting bending motion to a cell construct during cultivation results in growth of cells and neogenetic matrices, as compared to the results obtained with static cultivation. Thus, it can be concluded that bending motion provides stimulation to the cell construct, and promotes substance migration.

[0149] While the present invention has been described with reference to preferred embodiments, the description is not intended to limit the present invention.

INDUSTRIAL APPLICABILITY

[0150] The present invention relates to a cultivation apparatus for a culture including a cell and/or tissue. A cultivation apparatus for a cell and/or tissue proper to a region of a human body, etc. is provided. By imparting bending motion to a cell construct, tissue cultivation of vertebra, etc. can be executed efficiently. So, the present invention is useful.

2007273728 10 Mar 2011

The claims defining the invention are as follows:

1. A cultivation apparatus for a culture including a cell and/or tissue, comprising:

an incubator unit that accommodates the culture; and

a lever that penetrates through a wall of the incubator unit, extends from the outside of the incubator unit into the inside thereof, and moves in a circular arc around a fulcrum as a center, the fulcrum being set at the wall or in the vicinity thereof,

wherein bending to the culture is repeated by movement of the lever in said circular arc, and bending displacement is imparted to the culture by said repeated bending.

2. A cultivation apparatus for a culture including a cell and/or tissue, comprising:

a bed on which the culture is disposed;

an incubator unit that accommodates the culture with the bed;

a lever that penetrates from the outside of a wall of the incubator unit to the inside thereof, and moves in a circular arc around a fulcrum as a center, the fulcrum being set at the wall or in the vicinity thereof; and

a driving means that repeatedly pushes the bed by movement of the lever in said circular arc, repeatedly curves and deforms the bed, and imparts bending displacement to the culture by repeating the curving deformation.

3. A cultivation apparatus according to Claim 1 or 2, further comprising:

a pressure apparatus that applies pressure to the inside of the incubator unit, wherein

the incubator unit includes a diaphragm, and the pressure apparatus applies the pressure to the inside of the incubator unit through the diaphragm.

4. A cultivation apparatus for a culture comprising a

2007273728 29 Sep 2011

cell and/or tissue, comprising:

a bed on which the culture is disposed;

an incubator unit that accommodates the culture with the bed;

a lever that penetrates through a wall of the incubator unit, extends from the outside of the incubator unit to the inside thereof, can move in a circular arc around a fulcrum as a center, the fulcrum being set at the wall or in the vicinity of the wall, one end of the lever being attached to one end of the bed; and

a driving means that drives another end of the level in a circular arc, imparts movement to the lever in the circular arc around the fulcrum as a center, imparts stretching force to the bed by the movement to the lever in the circular arc, and extends and contracts the culture by deformation due to extension and contraction of the bed.

5. A cultivation method for a culture comprising a cell and/or tissue, comprising the steps of:

accommodating the culture in an incubator unit;

imparting movement, to a lever that penetrates through a wall of the incubator unit and extends from the outside of the incubator unit into the inside thereof, in a circular arc around a fulcrum set at the wall or in the vicinity thereof as a center;

repeating bending to the culture by movement of the lever in said circular arc; and

imparting bending displacement to the culture by said repeated bending.

6. A cultivation apparatus as defined in any one of claims 1 to 4, said apparatus being substantially as hereinbeore described with reference to any one of the examples.

7. A cultivation apparatus as defined in any one of claims 1 to 4, said apparatus being substantially as hereinbeore described with reference to any one of the embodiments illustrated in the accompanying drawings.

2007273728 10 Mar 2011

8. A cultivation method as defined in claim 5, said method being substantially as hereinbeore described with reference to any one of the examples.

9. A cultivation method as defined in claim 5, said method being substantially as hereinbeore described with reference to any one of the embodiments illustrated in the accompanying drawings.

Dated 9 March, 2011
Takagi Industrial Co., Ltd.

Patent Attorneys for the Applicant/Nominated Person
SPRUSON & FERGUSON

FIG.1

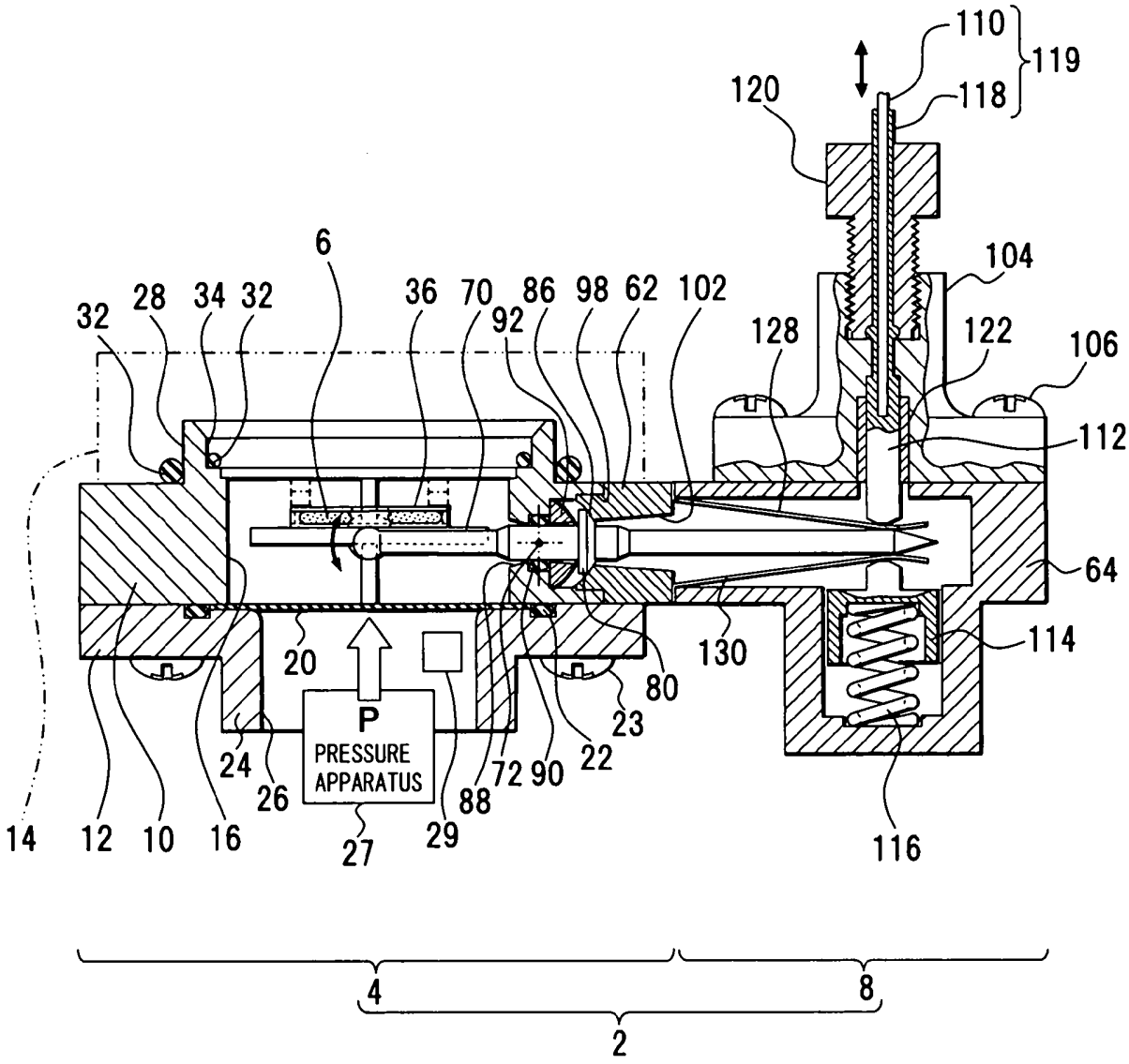
110
119
120
118
104
6
28
34
32
36
70
86
98
62
102
32
92
128
122
106
112
64
114
130
20
80
23
P
PRESSURE
APPARATUS
24
26
72
90
22
88
14
12
10
16
27
29
116
4
8
2

FIG.2

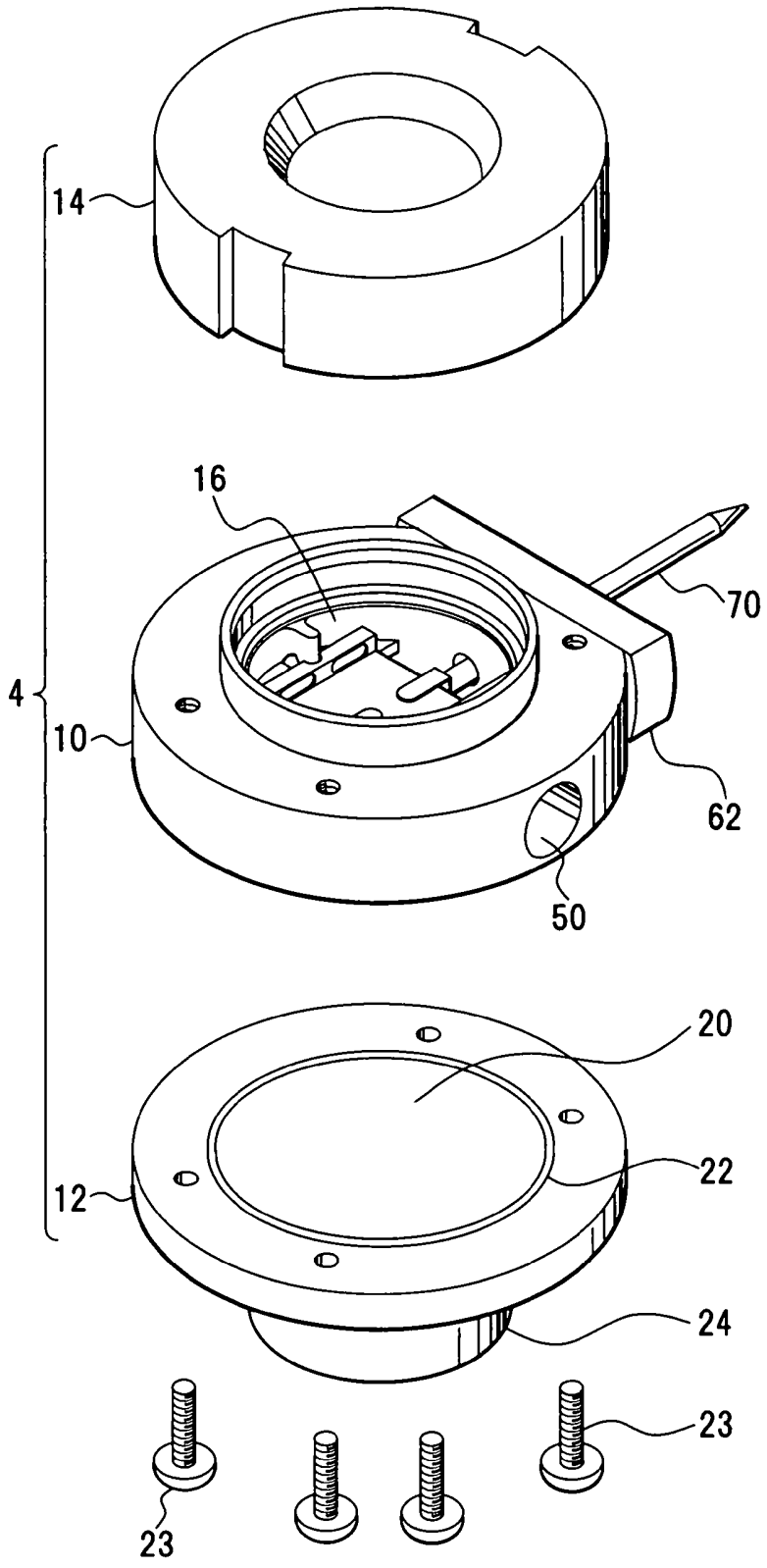

FIG.3

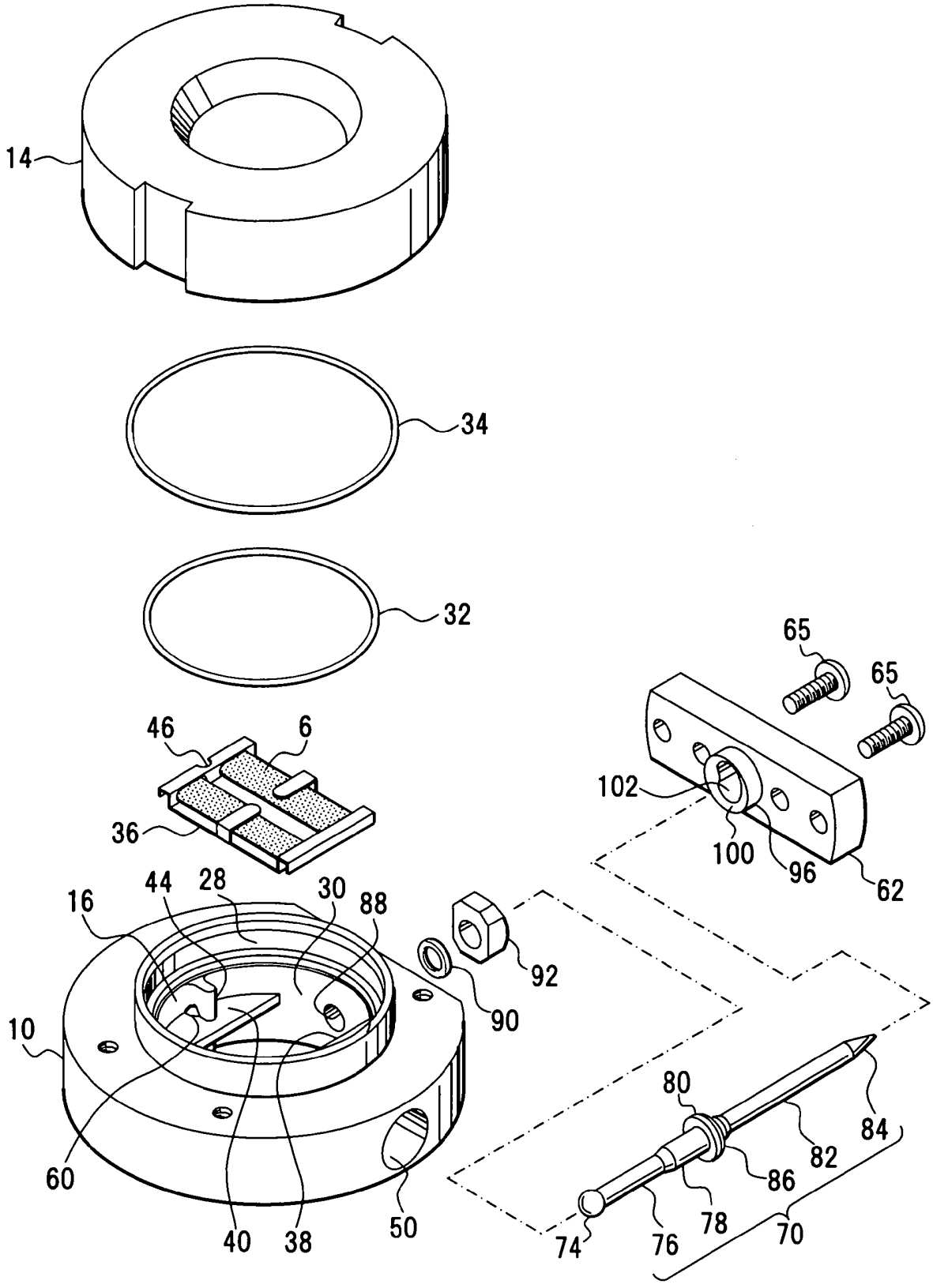
14
34
32
46
6
36
65
65
102
100
96
62
16
44
28
30
88
92
90
10
60
40
38
50
80
84
82
86
78
74
76
70

FIG.4

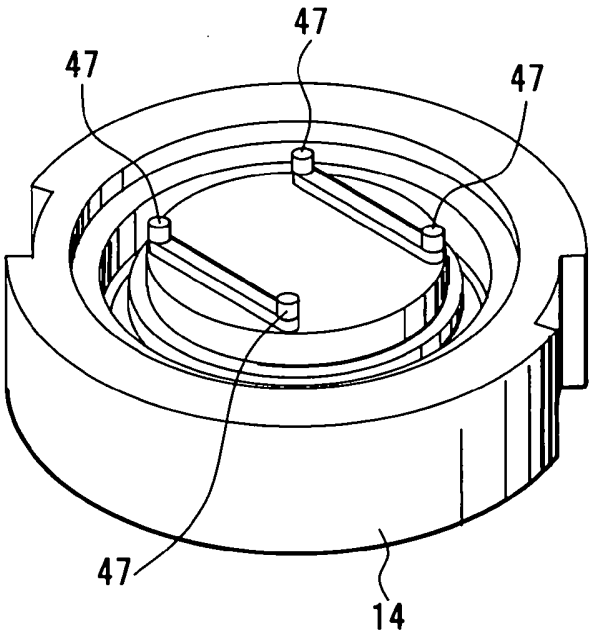

FIG.5

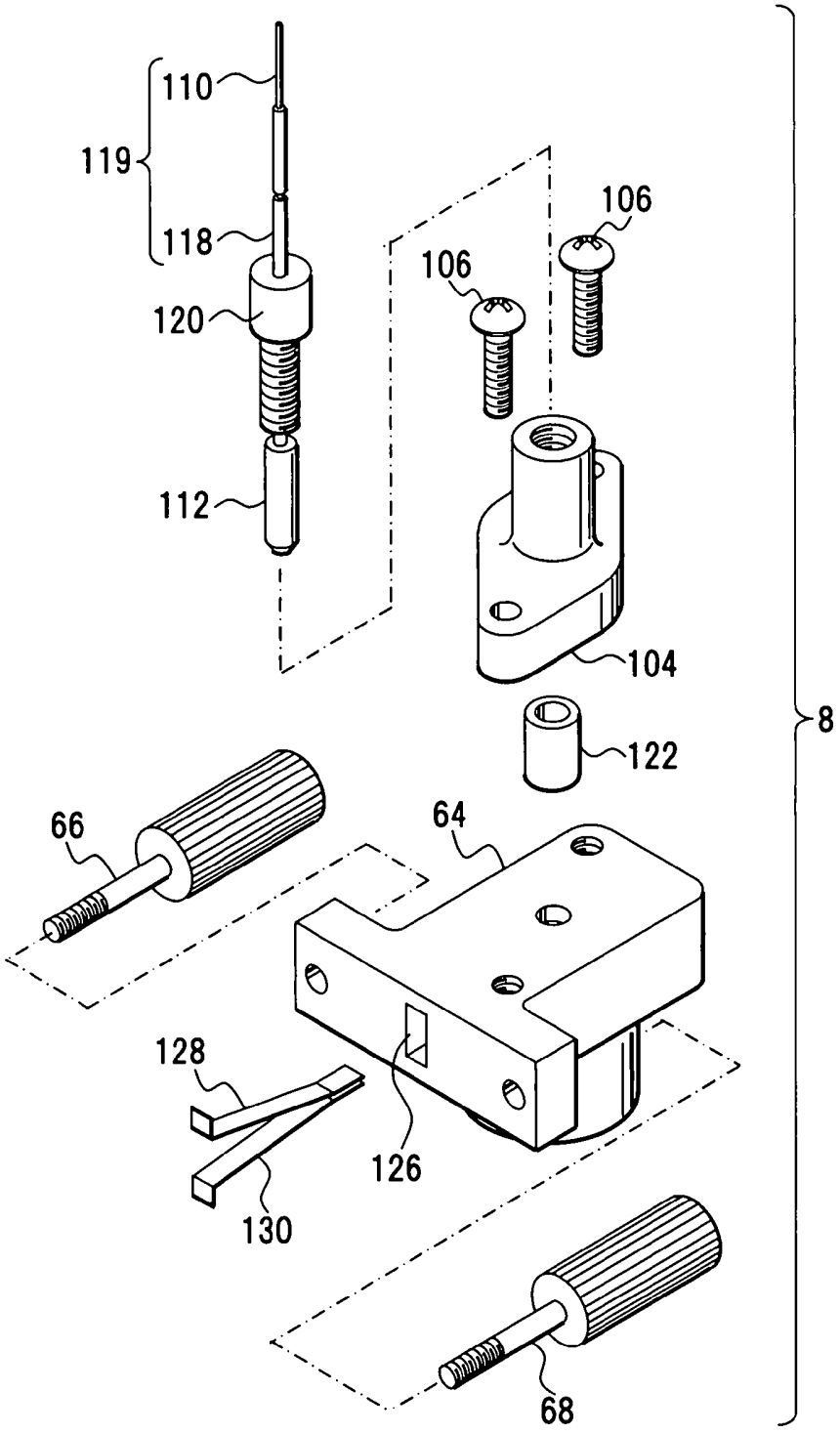

FIG.6

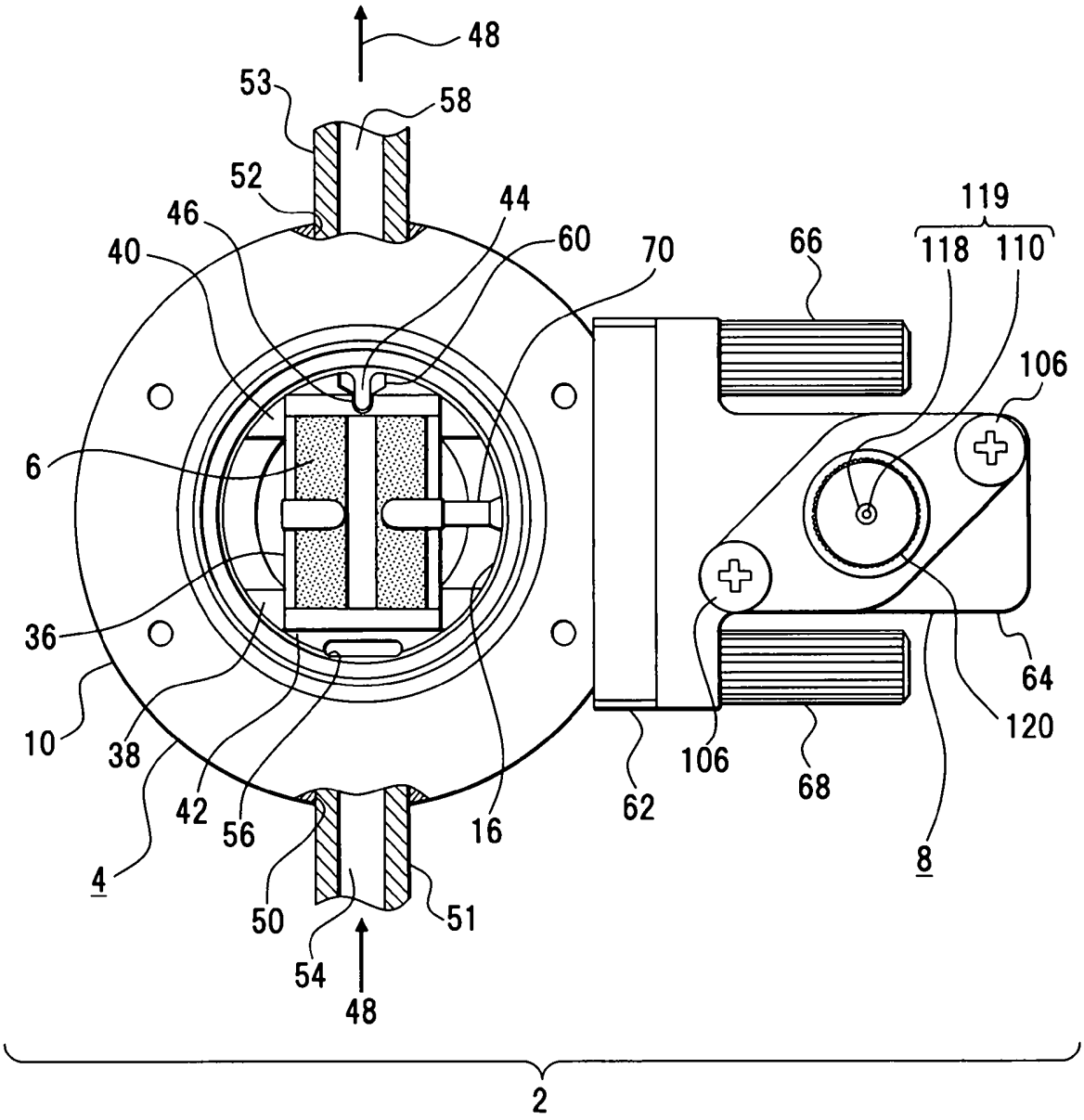
48
53
58
52
46
44
60
70
66
119
118
110
40
106
6
36
64
120
10
38
42
56
16
62
106
68
4
8
50
51
54
48
2

FIG.7

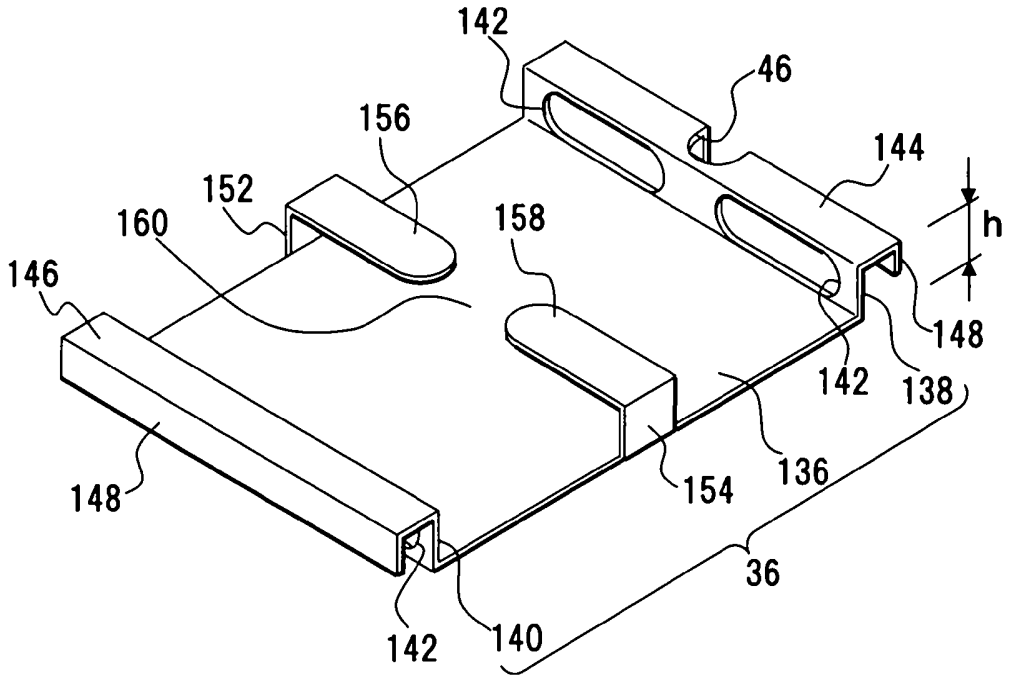
142
46
156
144
152
160
158
h
146
148
142
138
148
136
154
36
142
140

FIG.8

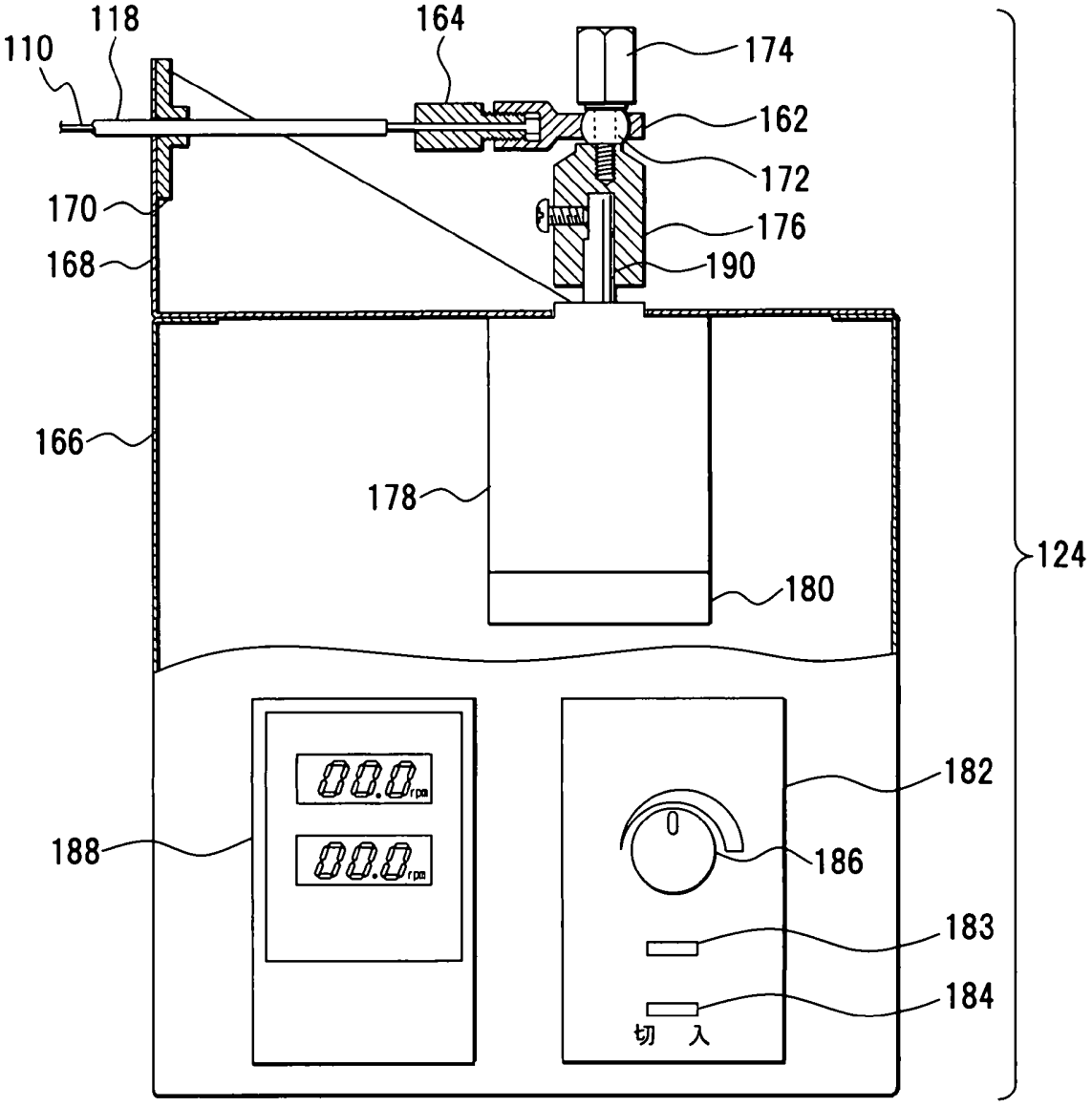
110
118
164
174
162
172
170
176
168
190
166
178
180
124
182
188
186
183
184
切 入

FIG.9

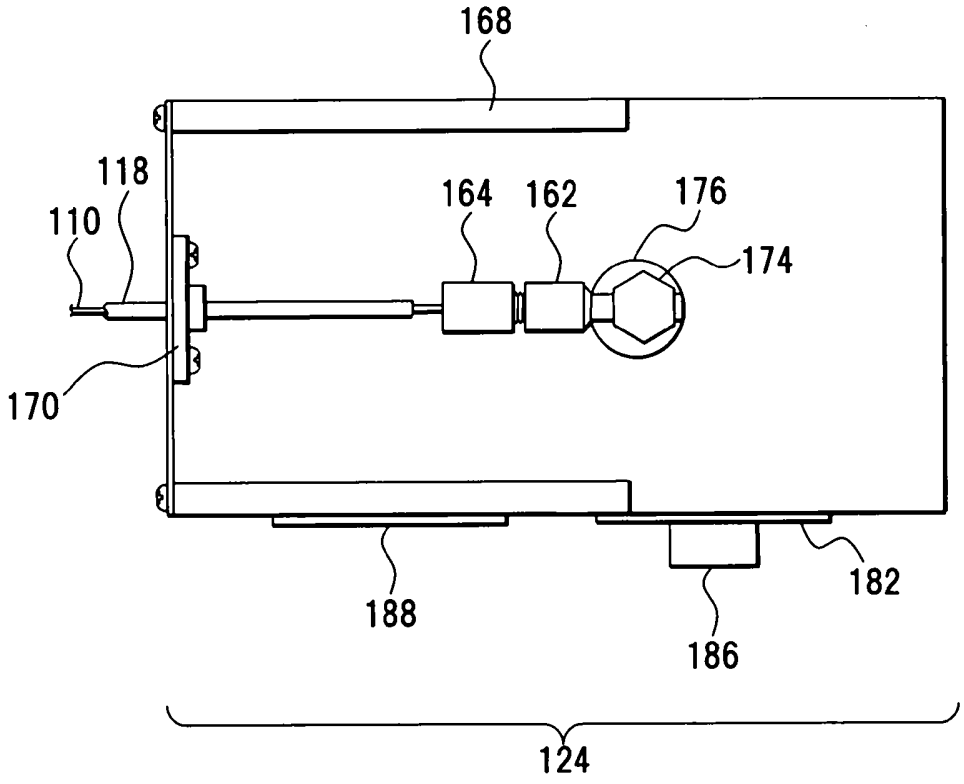

FIG.10

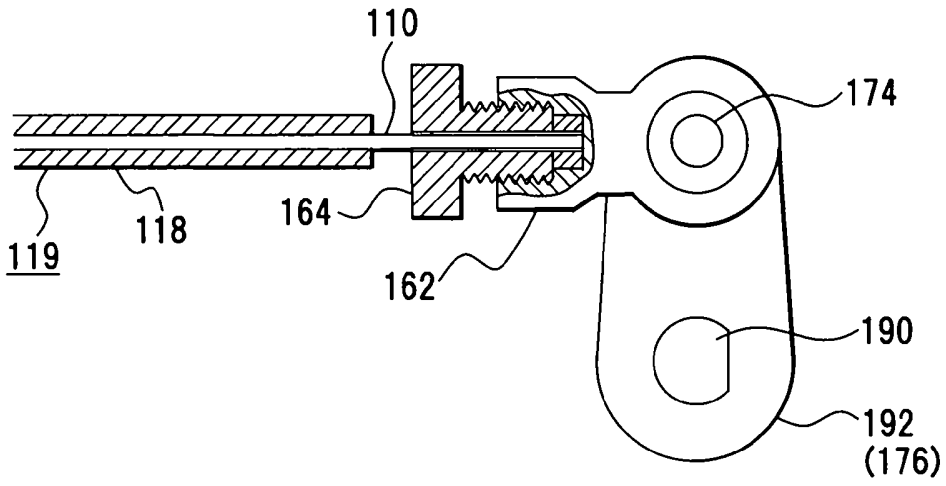

FIG.11

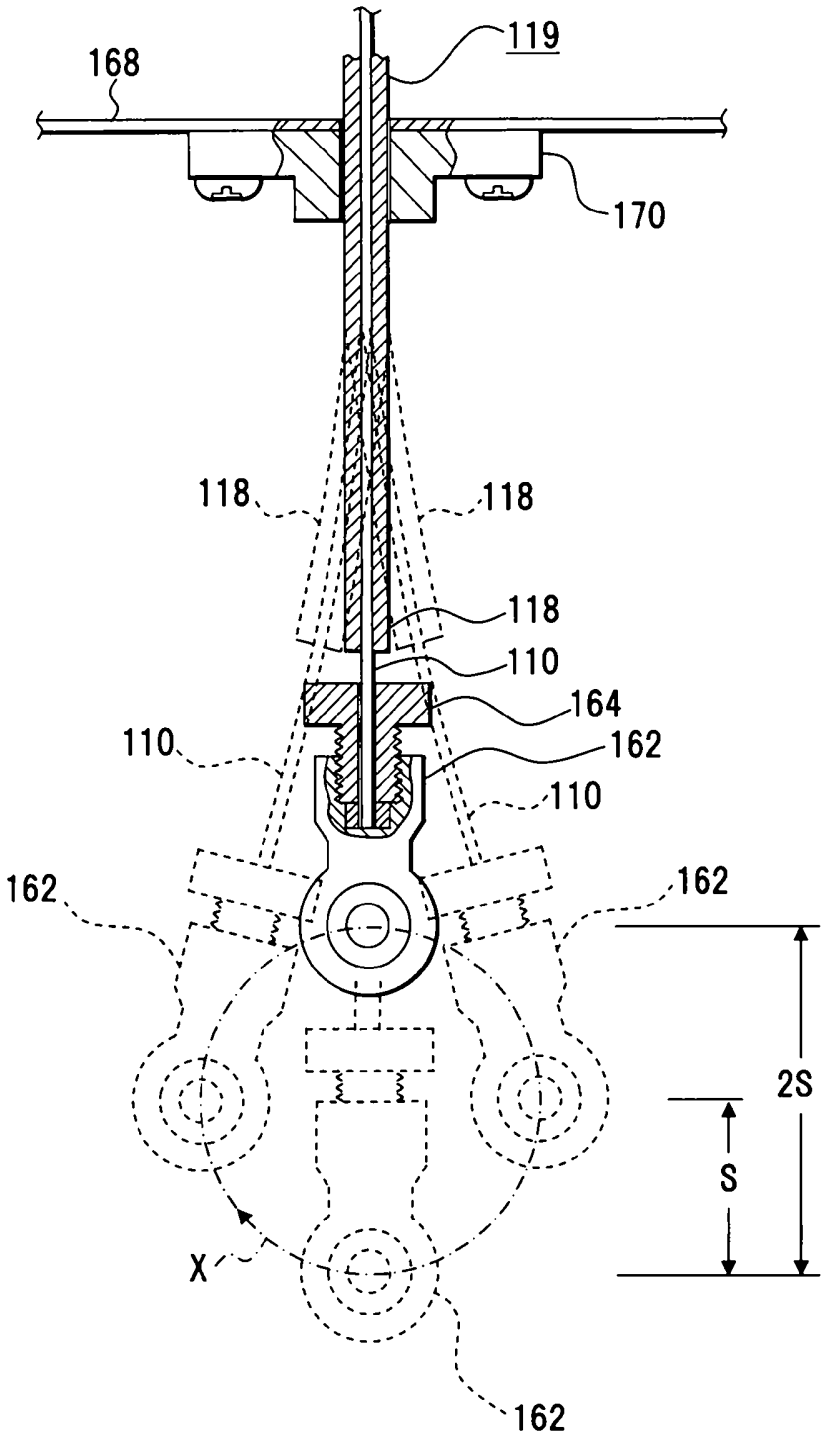

FIG.12

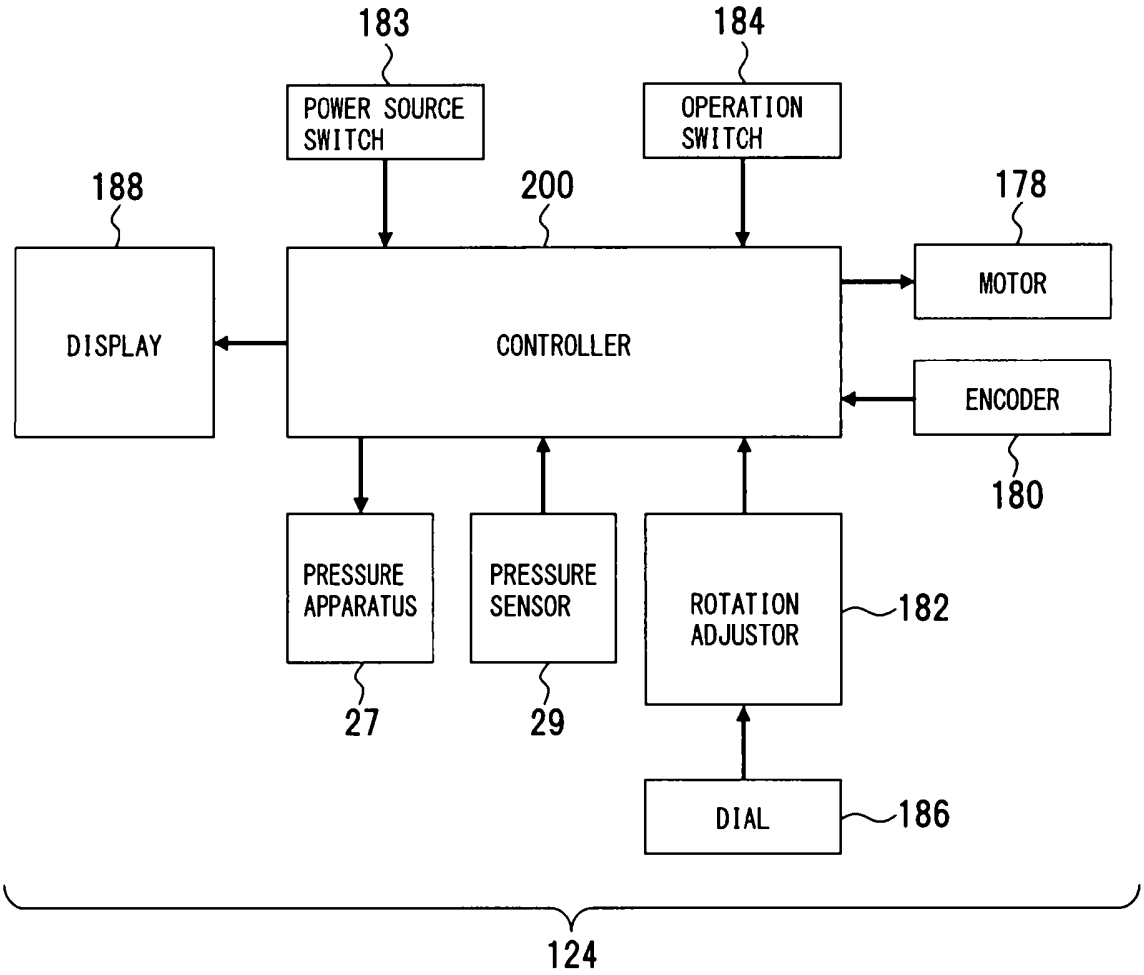
183
184
POWER SOURCE SWITCH
OPERATION SWITCH
188
200
178
DISPLAY
CONTROLLER
MOTOR
ENCODER
180
PRESSURE APPARATUS
PRESSURE SENSOR
ROTATION ADJUSTOR
182
27
29
DIAL
186
124

FIG.13

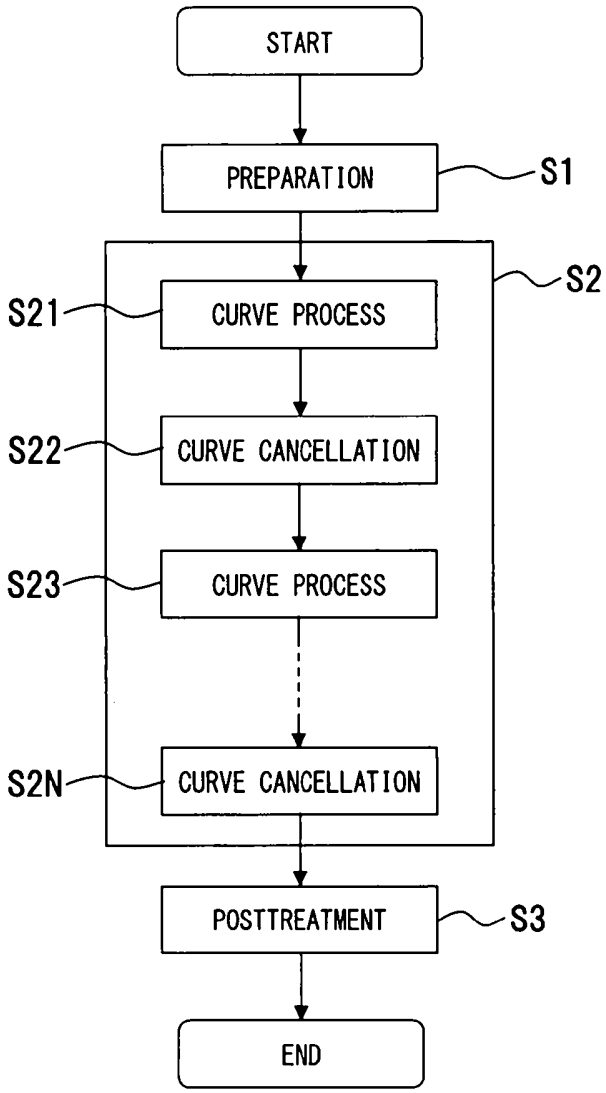
START
PREPARATION
S1
S2
S21
CURVE PROCESS
S22
CURVE CANCELLATION
S23
CURVE PROCESS
S2N
CURVE CANCELLATION
POSTTREATMENT
S3
END

FIG.14A

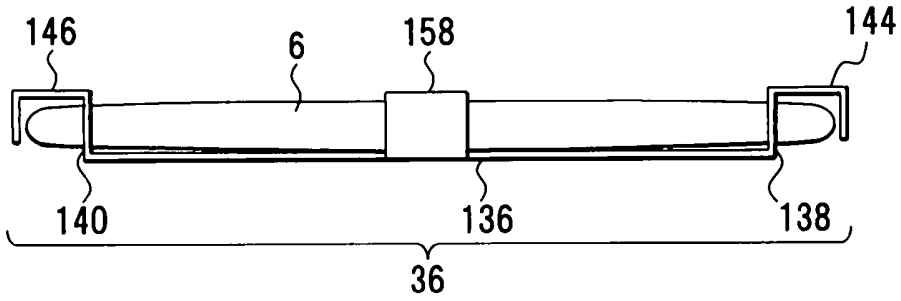

FIG.14B

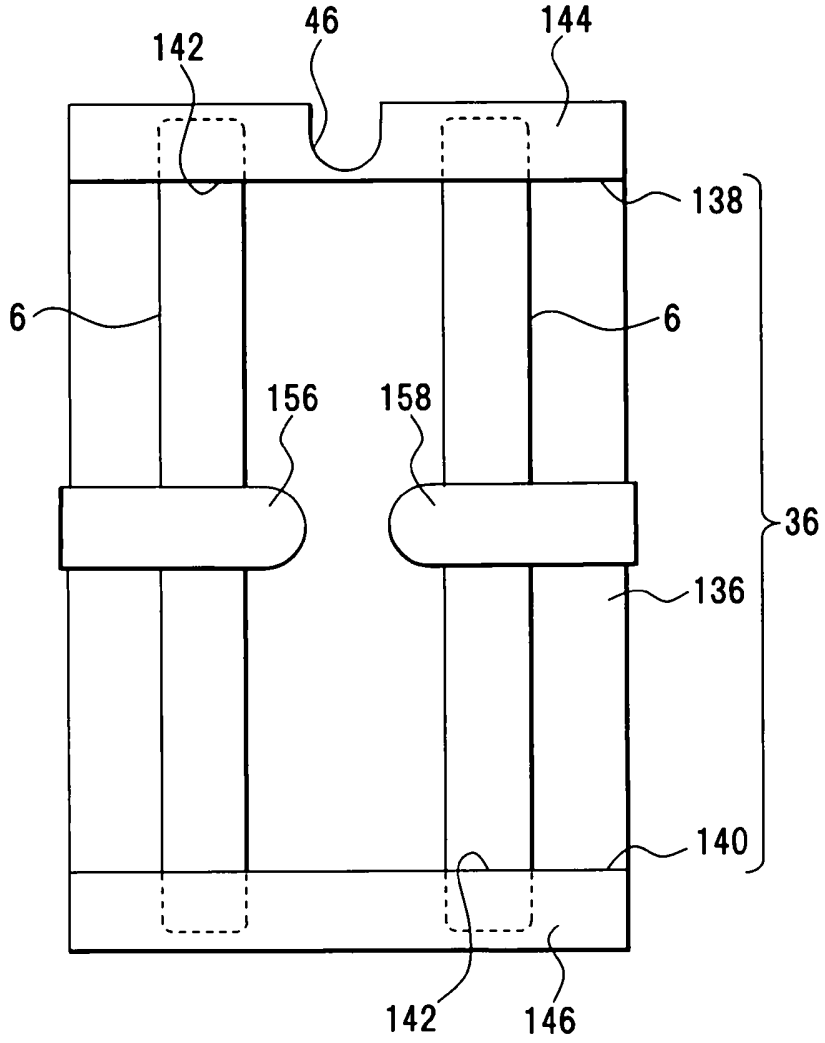

FIG.15A

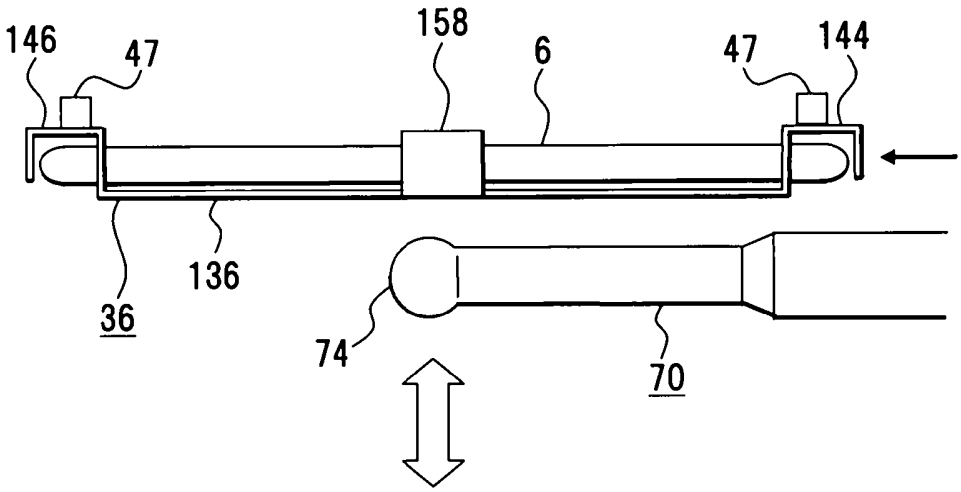

FIG.15B

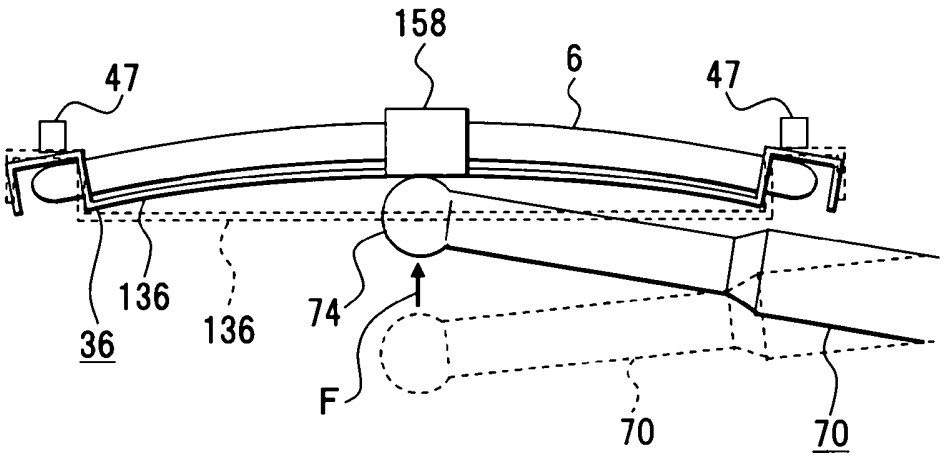

FIG.16

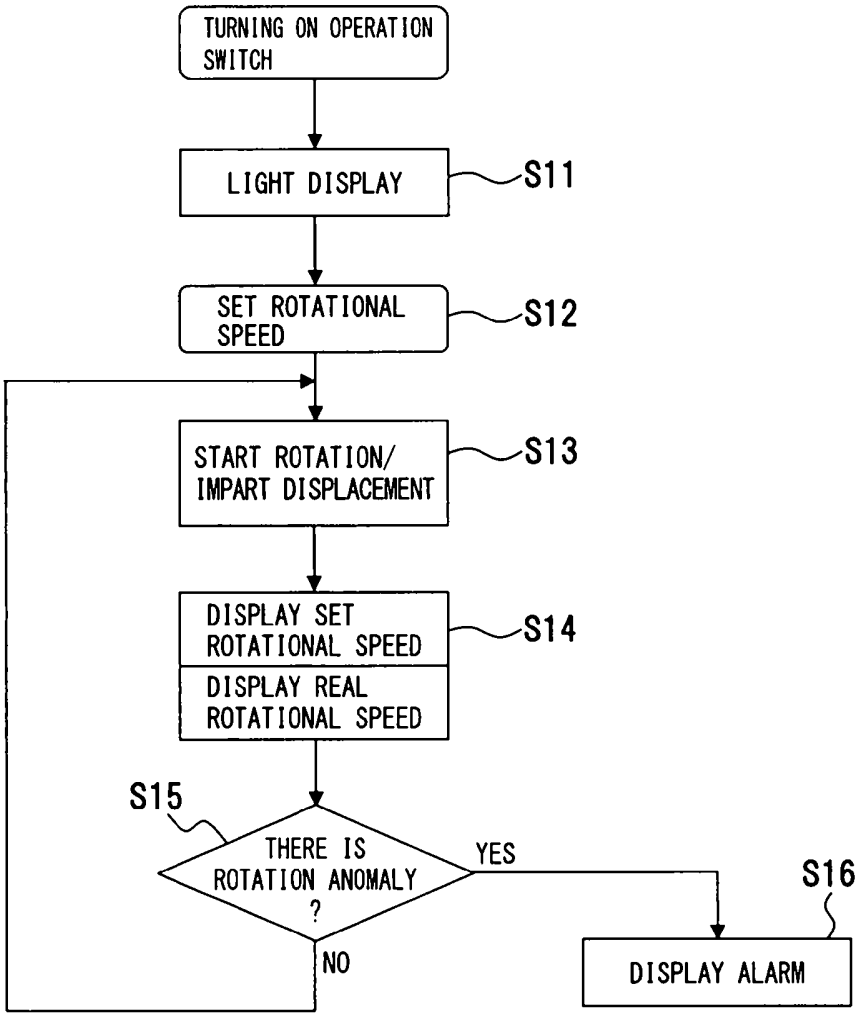
TURNING ON OPERATION SWITCH
LIGHT DISPLAY
S11
SET ROTATIONAL SPEED
S12
START ROTATION/ IMPART DISPLACEMENT
S13
DISPLAY SET ROTATIONAL SPEED
DISPLAY REAL ROTATIONAL SPEED
S14
S15
THERE IS ROTATION ANOMALY ?
YES
NO
S16
DISPLAY ALARM

FIG.17

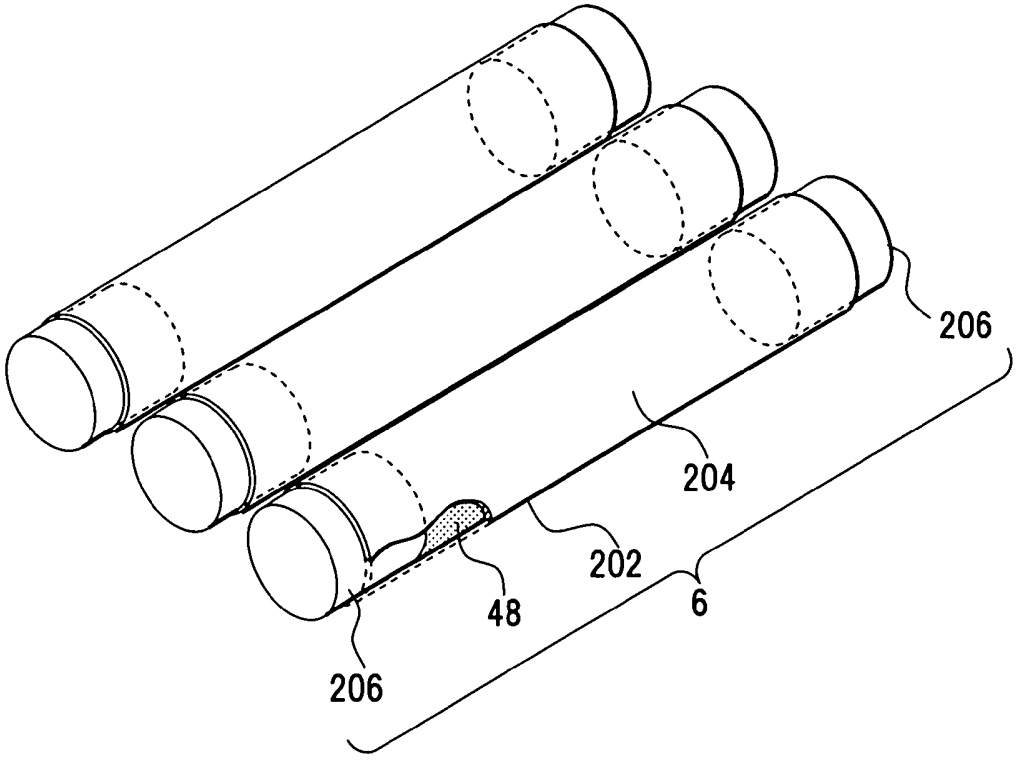

FIG.18

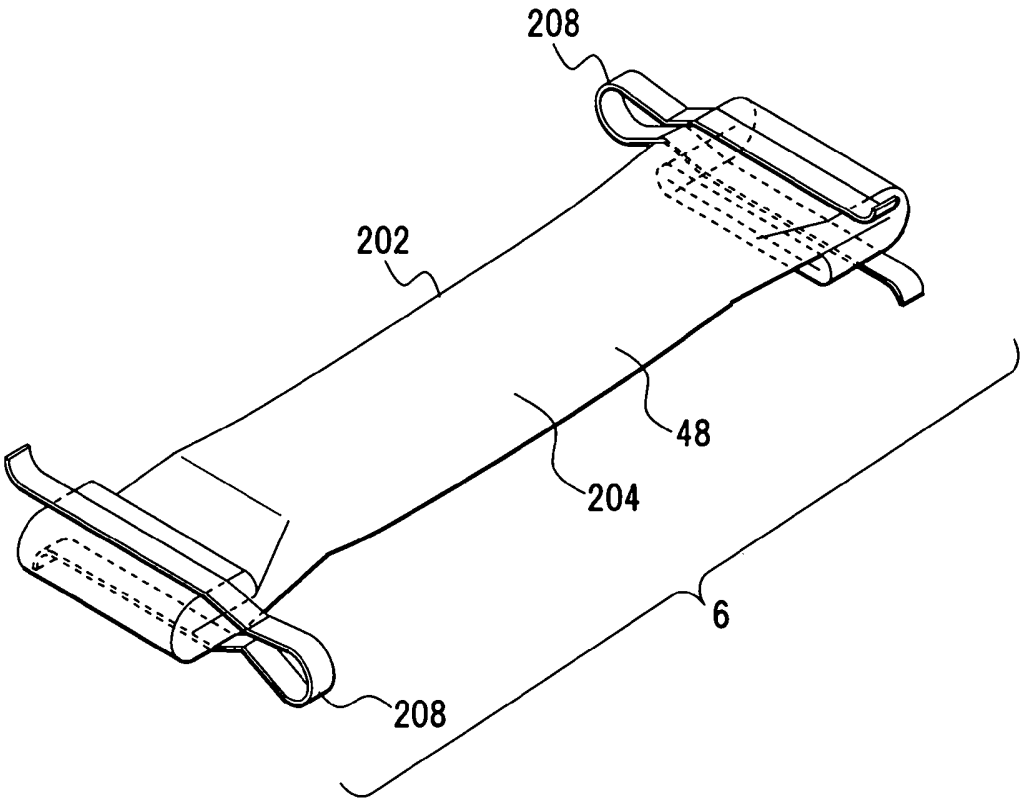

FIG.19

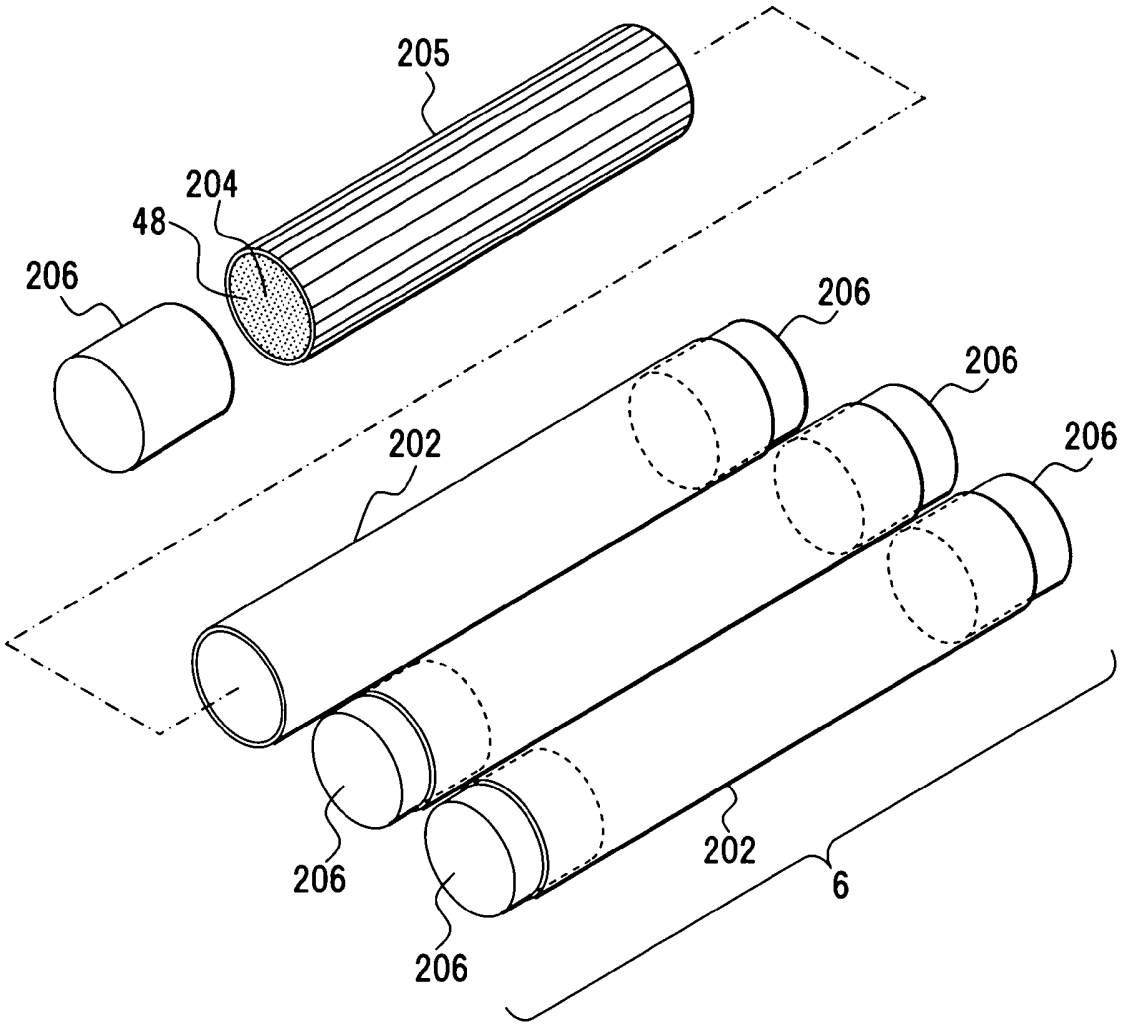

FIG.20

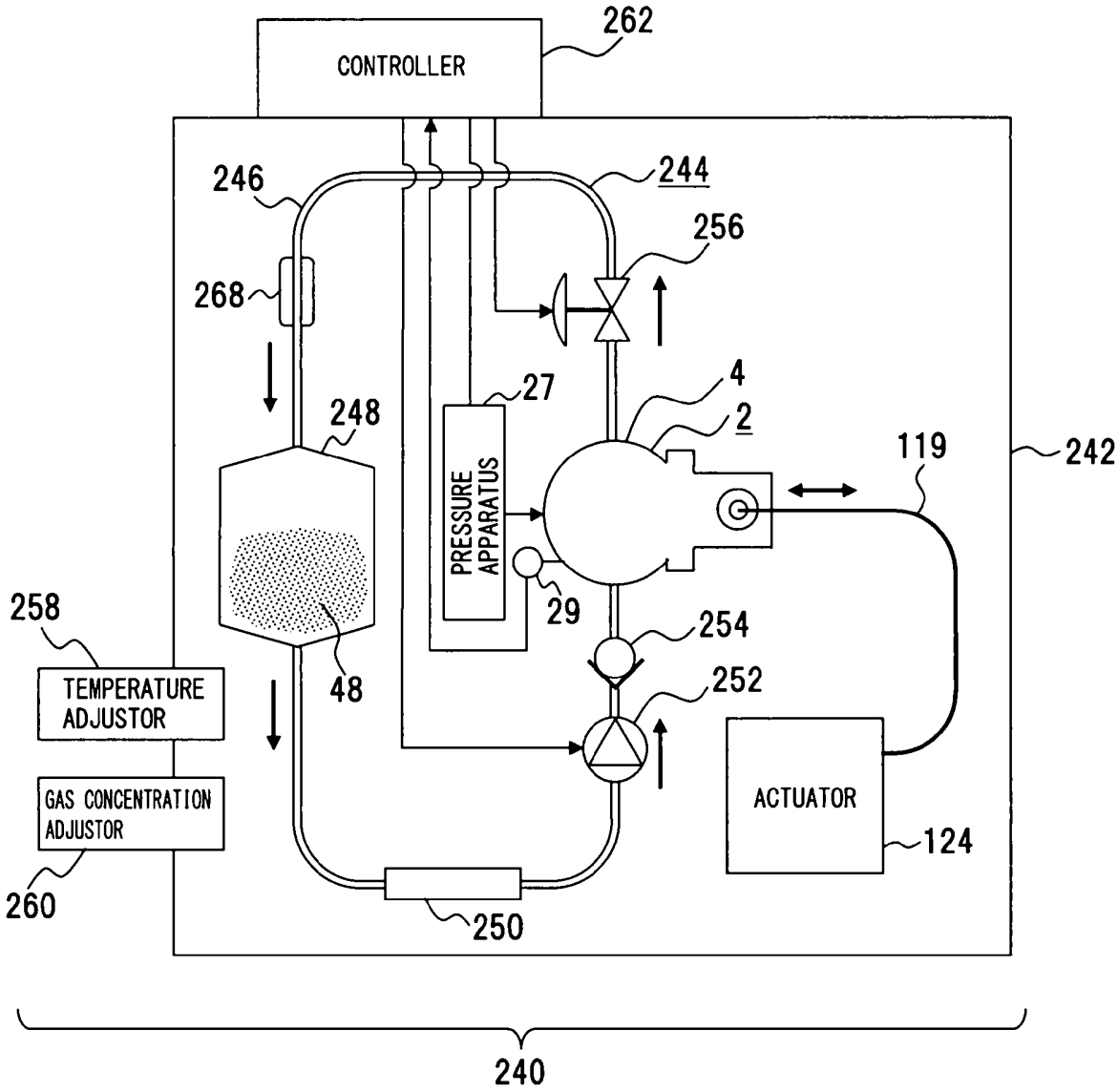
CONTROLLER
262
246
244
256
268
27
4
2
248
PRESSURE APPARATUS
119
242
29
254
258
252
TEMPERATURE ADJUSTOR
48
ACTUATOR
GAS CONCENTRATION ADJUSTOR
124
260
250
240

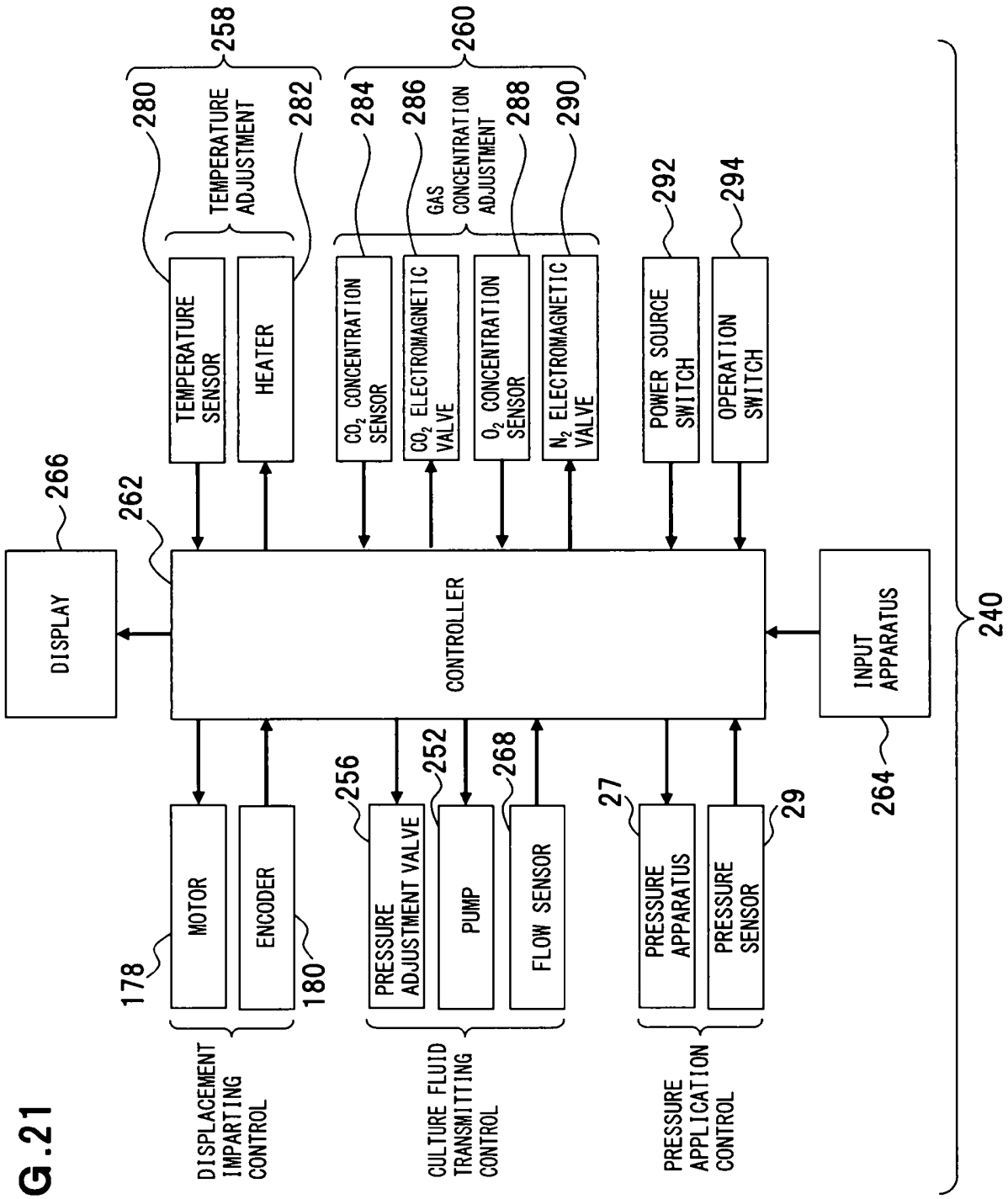
DISPLAY
266
262
CONTROLLER
INPUT APPARATUS
264
240
TEMPERATURE SENSOR
HEATER
280
282
TEMPERATURE ADJUSTMENT
258
CO_2 CONCENTRATION SENSOR
CO_2 ELECTROMAGNETIC VALVE
O_2 CONCENTRATION SENSOR
N_2 ELECTROMAGNETIC VALVE
284
286
288
290
GAS CONCENTRATION ADJUSTMENT
260
POWER SOURCE SWITCH
OPERATION SWITCH
292
294
MOTOR
ENCODER
178
180
DISPLACEMENT IMPARTING CONTROL
PRESSURE ADJUSTMENT VALVE
PUMP
FLOW SENSOR
256
252
268
CULTURE FLUID TRANSMITTING CONTROL
PRESSURE APPARATUS
PRESSURE SENSOR
27
29
PRESSURE APPLICATION CONTROL

FIG.21

FIG.22

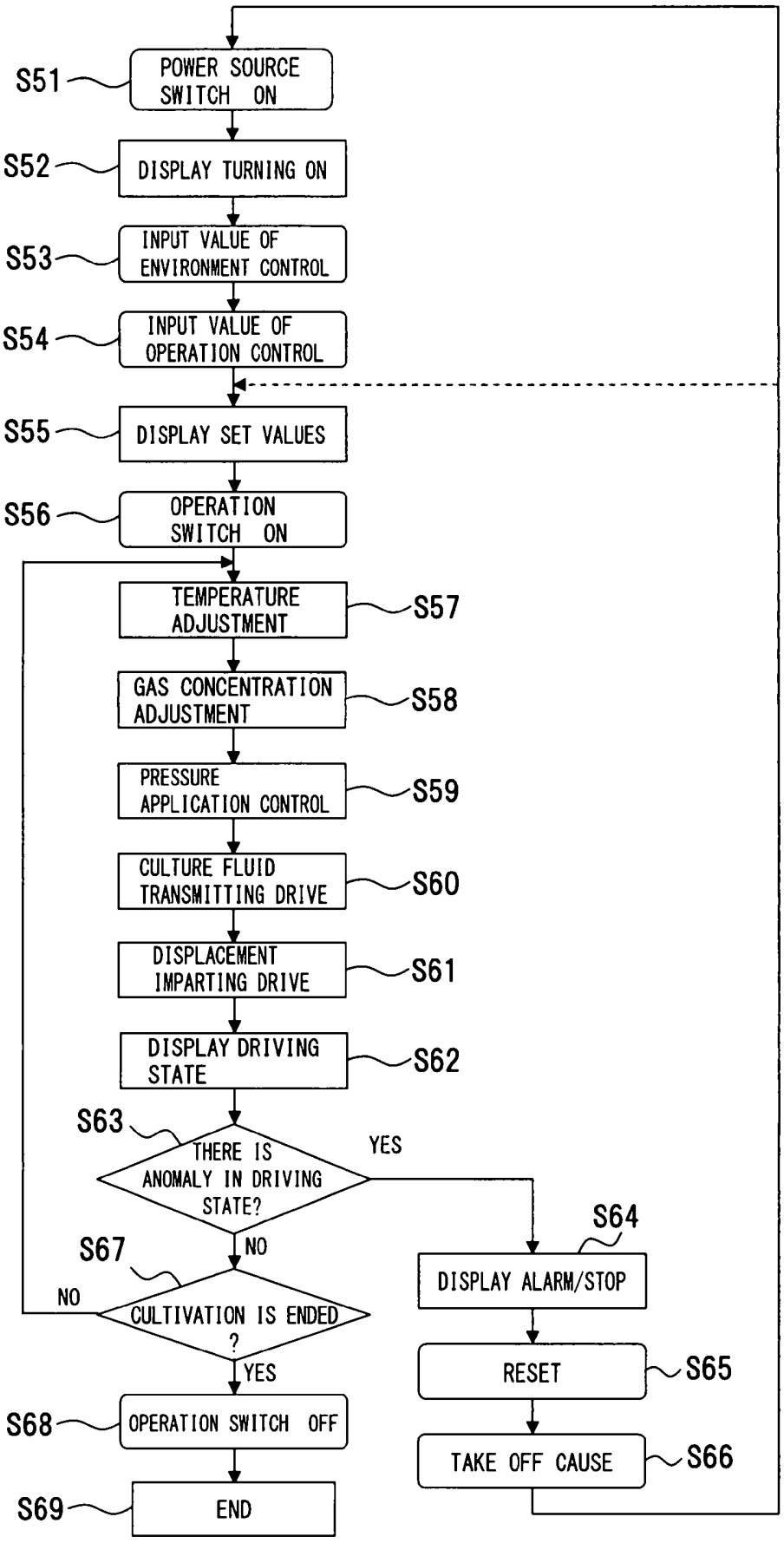
S51
POWER SOURCE SWITCH ON
S52
DISPLAY TURNING ON
S53
INPUT VALUE OF ENVIRONMENT CONTROL
S54
INPUT VALUE OF OPERATION CONTROL
S55
DISPLAY SET VALUES
S56
OPERATION SWITCH ON
TEMPERATURE ADJUSTMENT
S57
GAS CONCENTRATION ADJUSTMENT
S58
PRESSURE APPLICATION CONTROL
S59
CULTURE FLUID TRANSMITTING DRIVE
S60
DISPLACEMENT IMPARTING DRIVE
S61
DISPLAY DRIVING STATE
S62
S63
THERE IS ANOMALY IN DRIVING STATE?
YES
NO
S64
DISPLAY ALARM/STOP
S67
CULTIVATION IS ENDED ?
NO
YES
RESET
S65
TAKE OFF CAUSE
S66
S68
OPERATION SWITCH OFF
S69
END

FIG.23

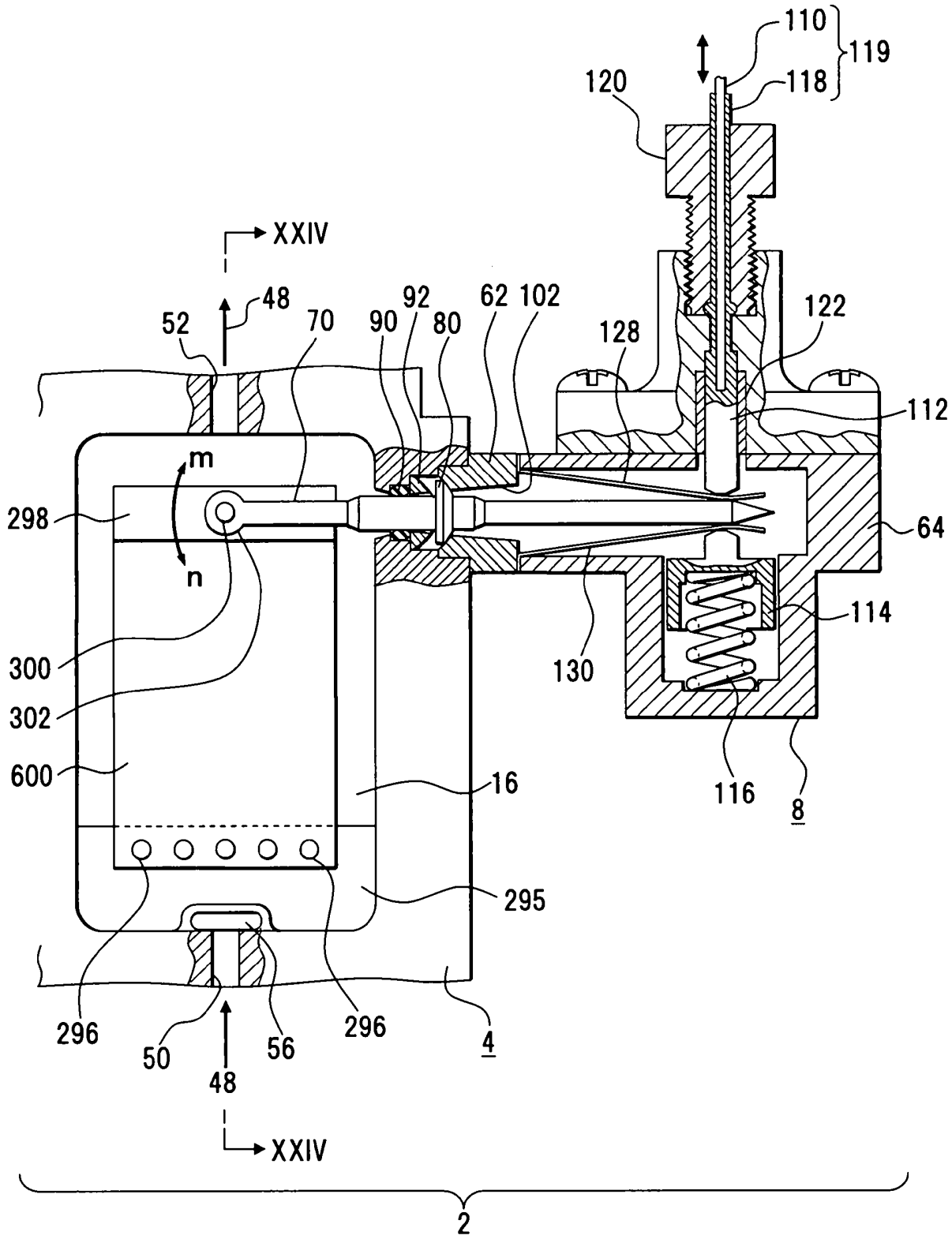
110
119
118
120
XXIV
48
52
70
90
92
80
62
102
128
122
112
m
n
298
64
300
302
600
130
114
16
116
8
295
296
50
56
296
4
48
XXIV
2

FIG.24

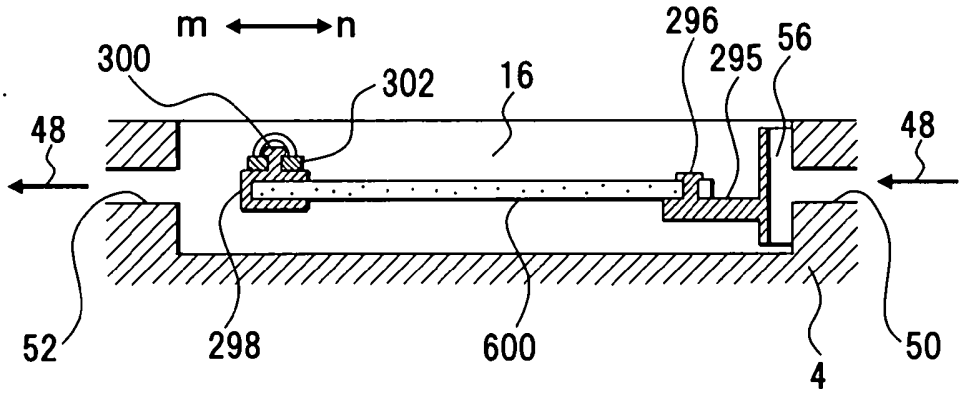

FIG.25

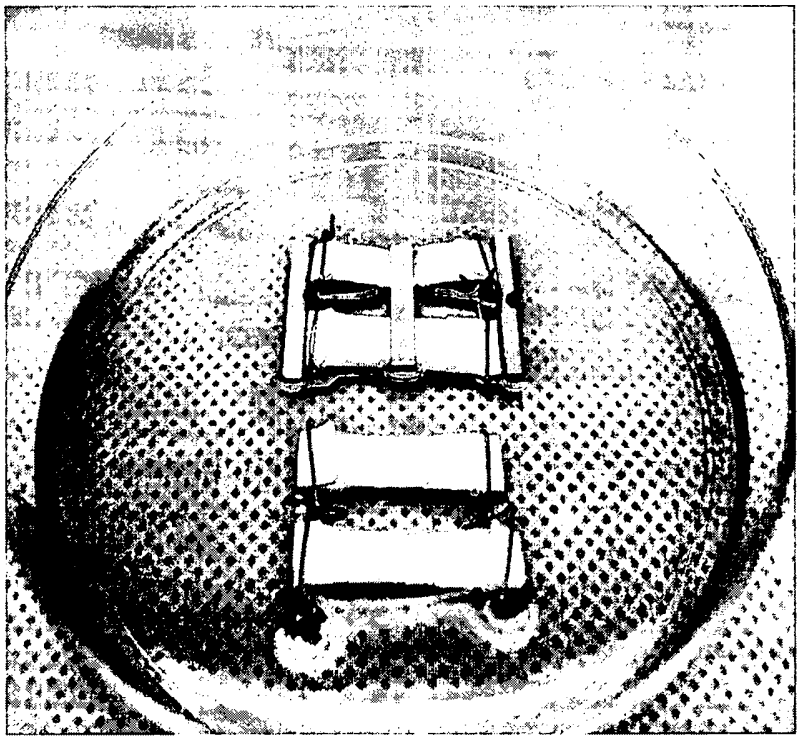

FIG.26

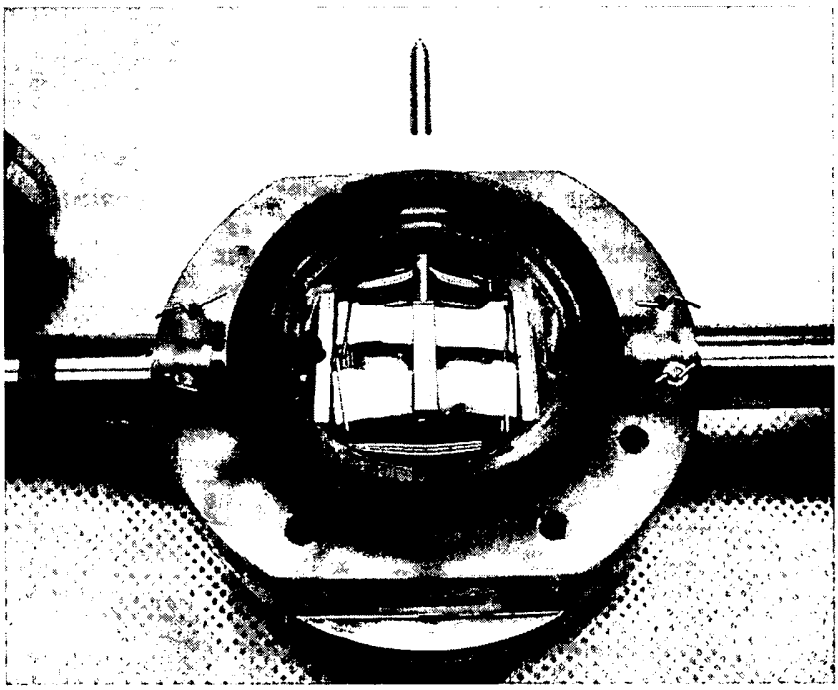

FIG.27

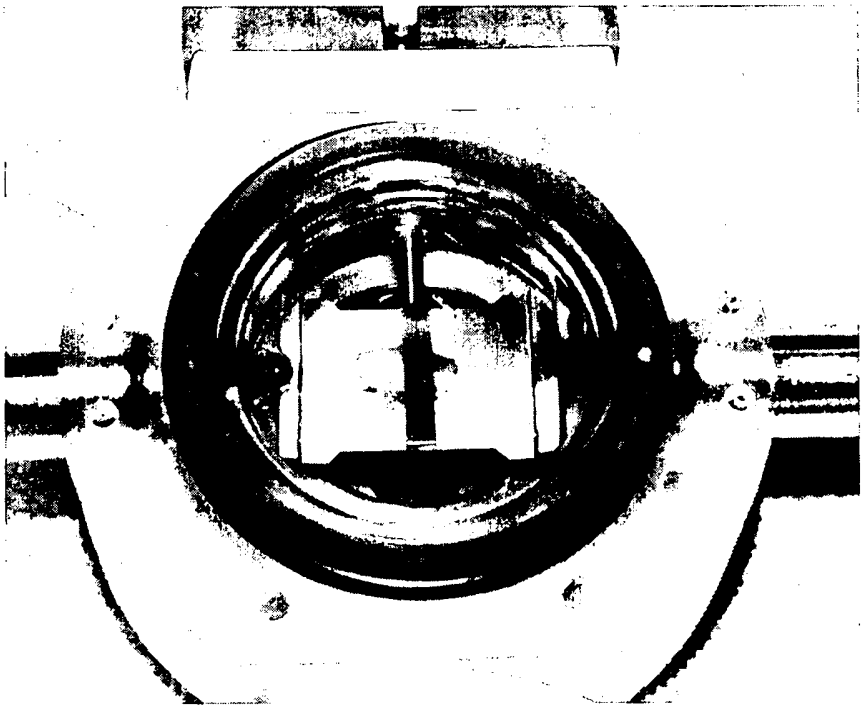

FIG.28

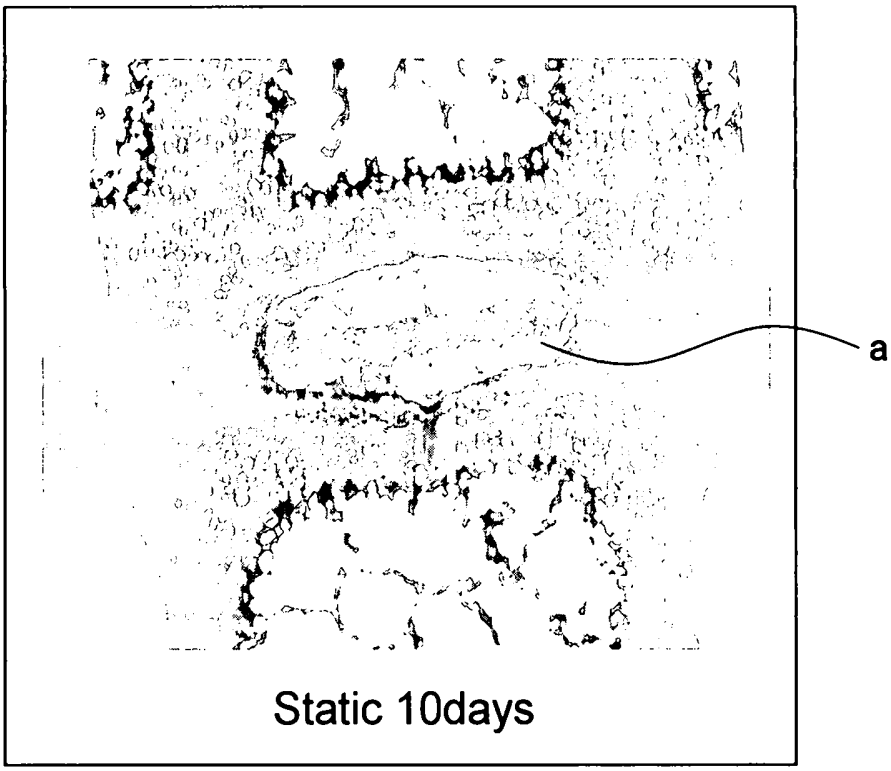

FIG.29

