May 13, 1941. J. L. FERGUSON 2,242,177

CARTON SEALER

Filed March 11, 1939 20 Sheets-Sheet 1

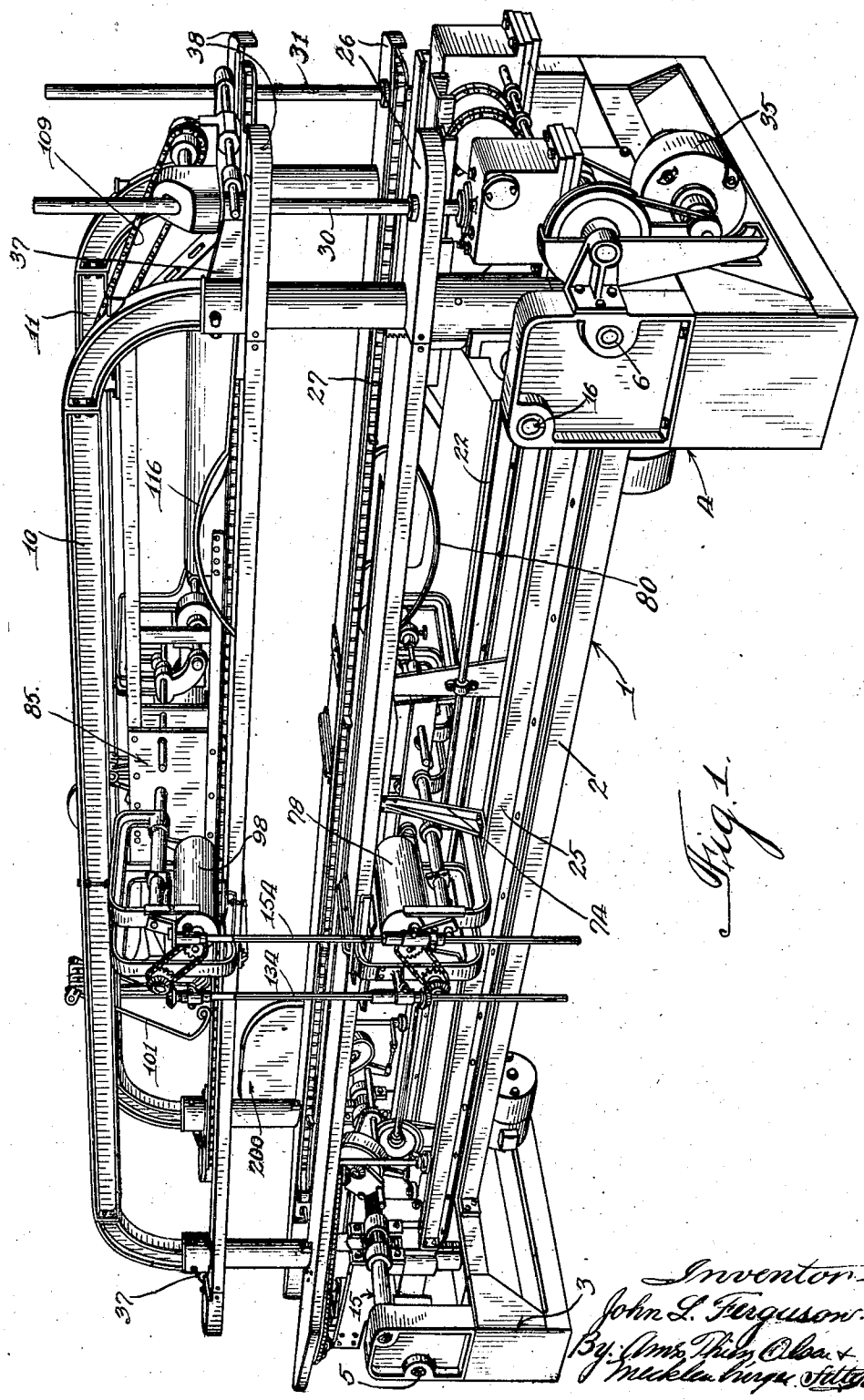

Fig. 1.

Inventor:
John L. Ferguson.
By: Amos Thiess Olson & Mecklenburger Attys.

May 13, 1941. J. L. FERGUSON 2,242,177

CARTON SEALER

Filed March 11, 1939 20 Sheets-Sheet 2

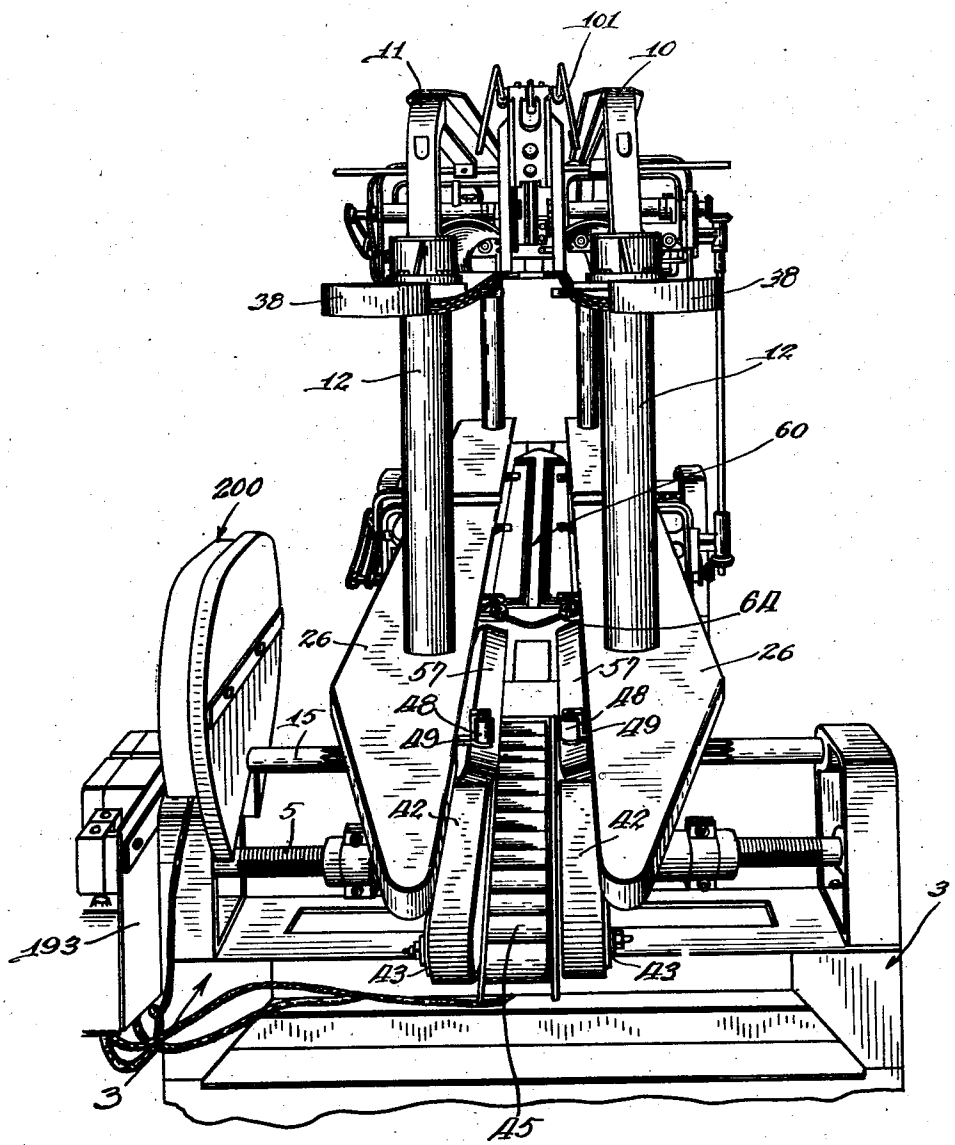

Fig. 2.

Inventor
John L. Ferguson.
By Ames, Thiess, Olson & Mecklenburger
Attys.

May 13, 1941. J. L. FERGUSON 2,242,177

CARTON SEALER

Filed March 11, 1939 20 Sheets-Sheet 3

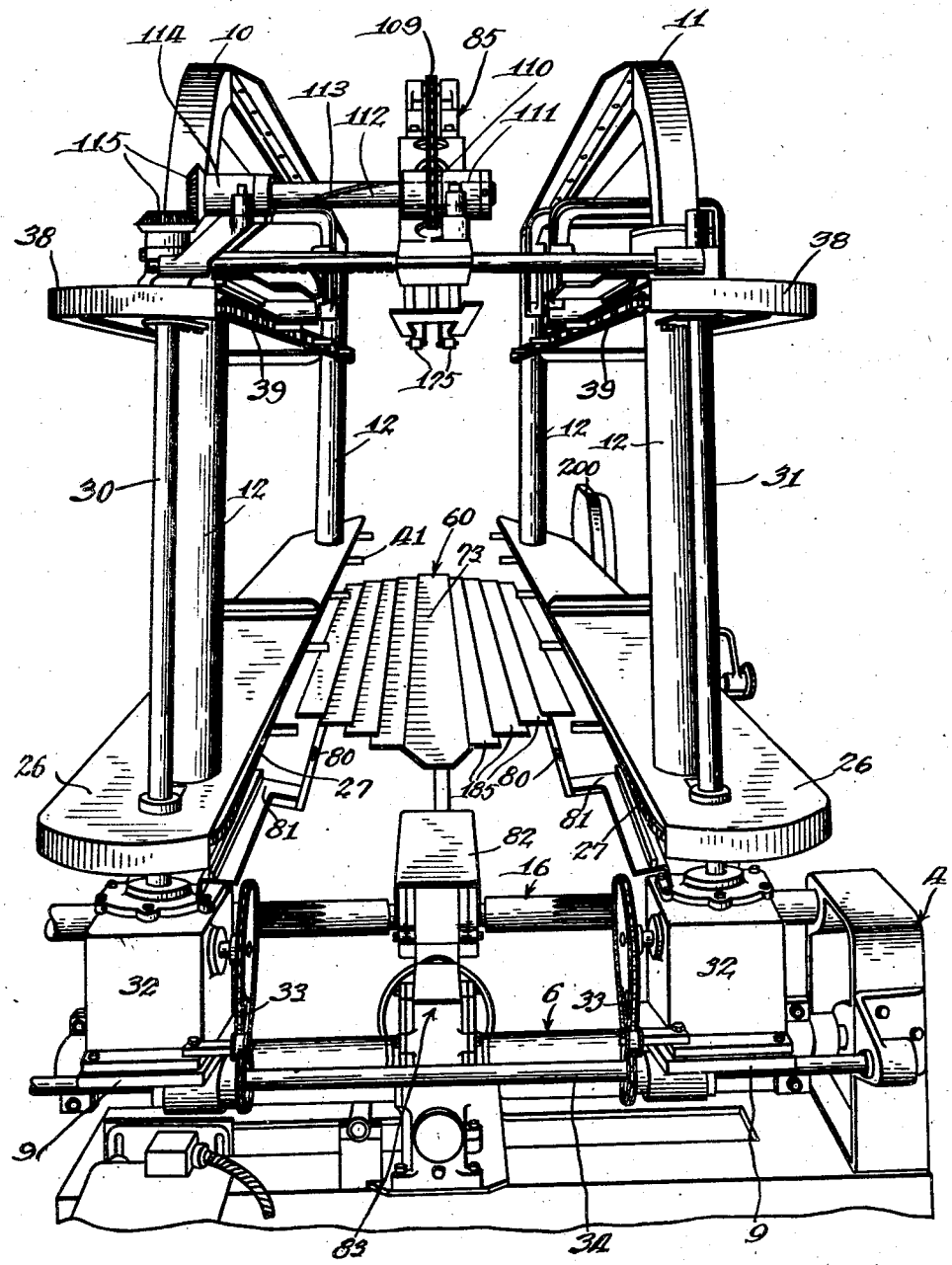

Fig. 3.

Inventor
John L. Ferguson
By: Ames, Thiess, Olsen & Mecklenburger.
Attys

May 13, 1941. J. L. FERGUSON 2,242,177

CARTON SEALER

Filed March 11, 1939 20 Sheets-Sheet 4

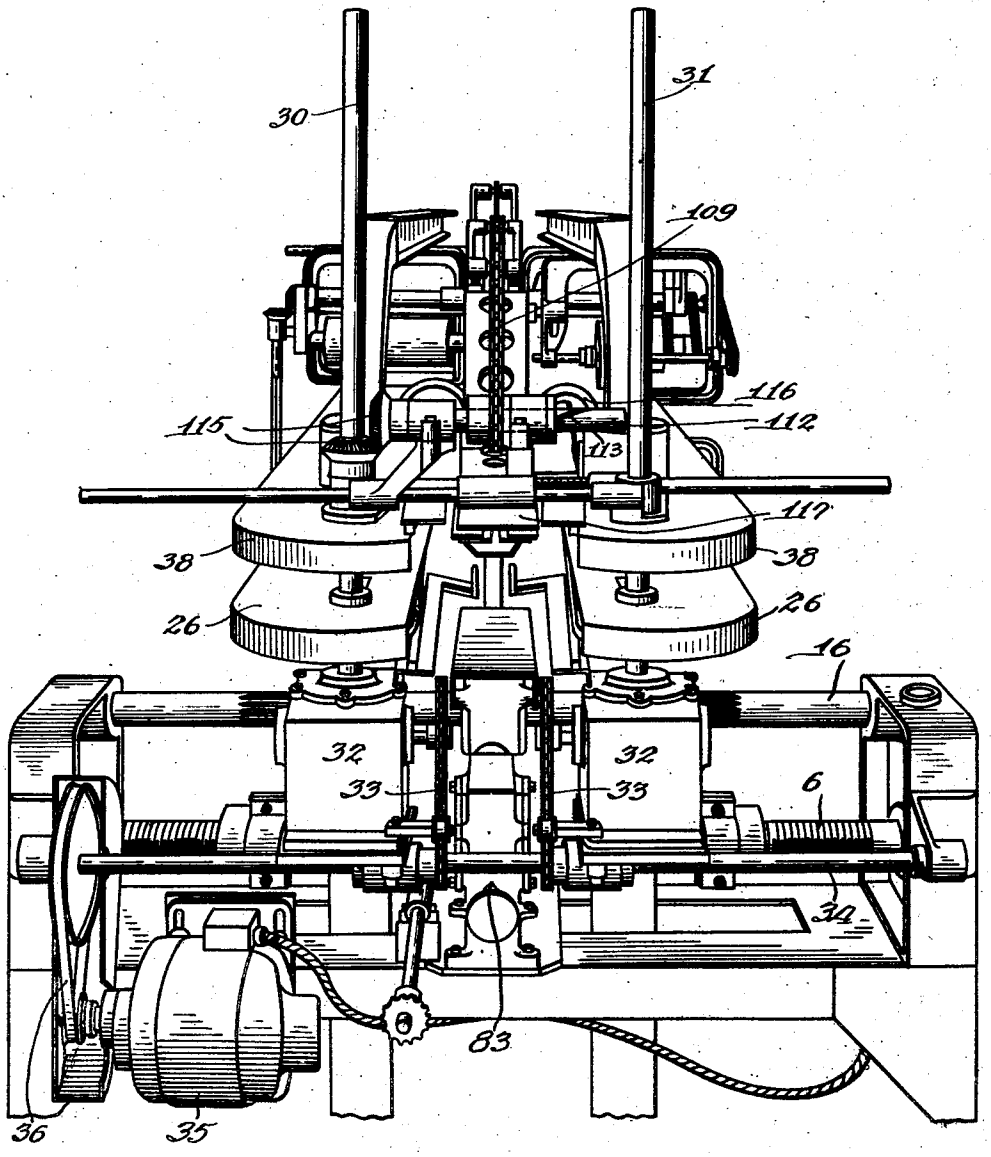

Fig. 4.

Inventor.
John L. Ferguson
By: Ames, Thiess, Olson & Mecklenburger.
Attys.

May 13, 1941. J. L. FERGUSON 2,242,177

CARTON SEALER

Filed March 11, 1939 20 Sheets-Sheet 5

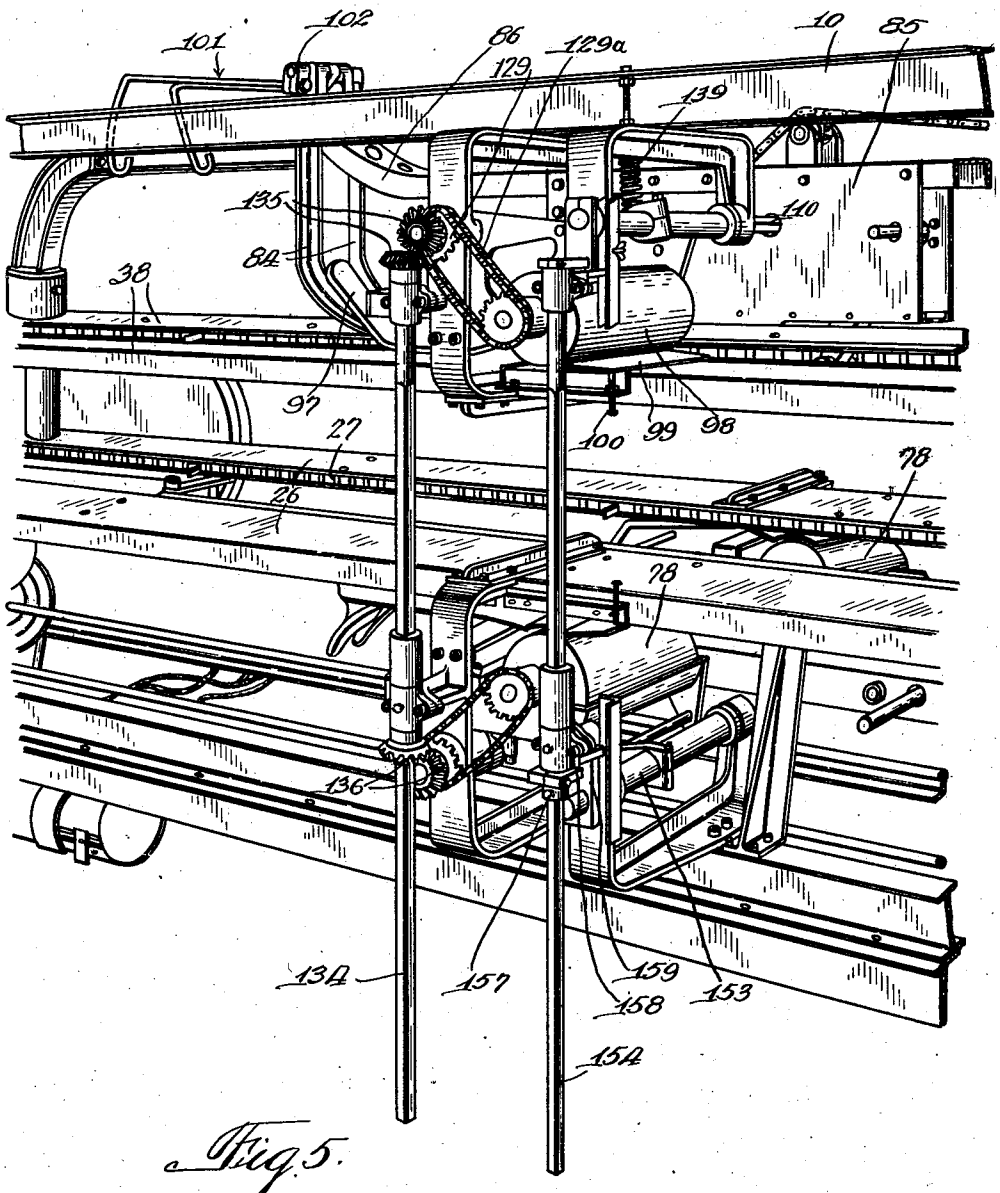

Fig. 5.

Inventor
John L. Ferguson.
By: Ames, Thiss, Olsa & Mecklenburger.
Attys.

May 13, 1941. J. L. FERGUSON 2,242,177

CARTON SEALER

Filed March 11, 1939 20 Sheets-Sheet 6

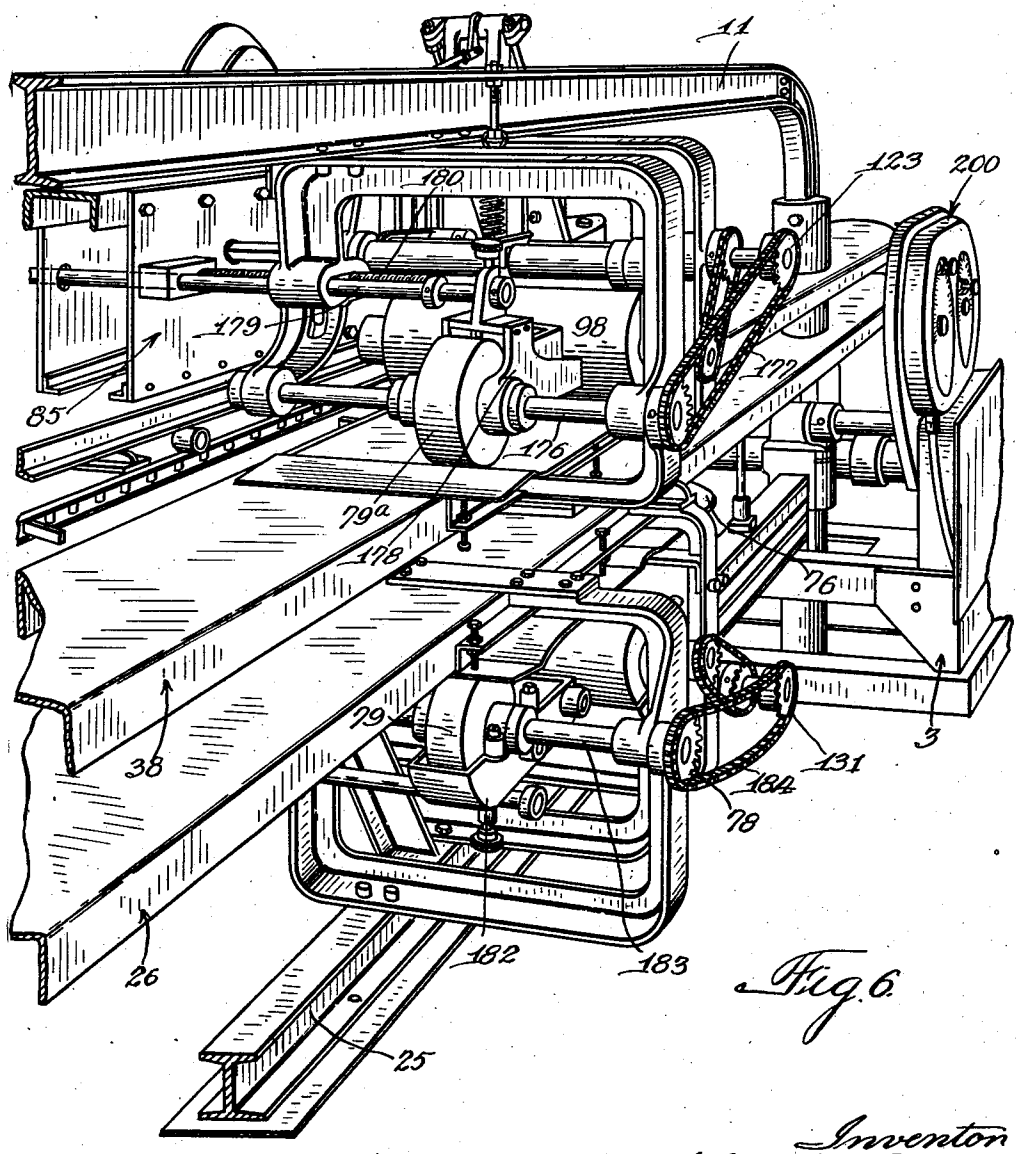

Fig. 6.

Inventor
John L. Ferguson.
By: Amos, Thiess, Olson & Mecklenburger
Attys.

May 13, 1941. J. L. FERGUSON 2,242,177

CARTON SEALER

Filed March 11, 1939 20 Sheets-Sheet 7

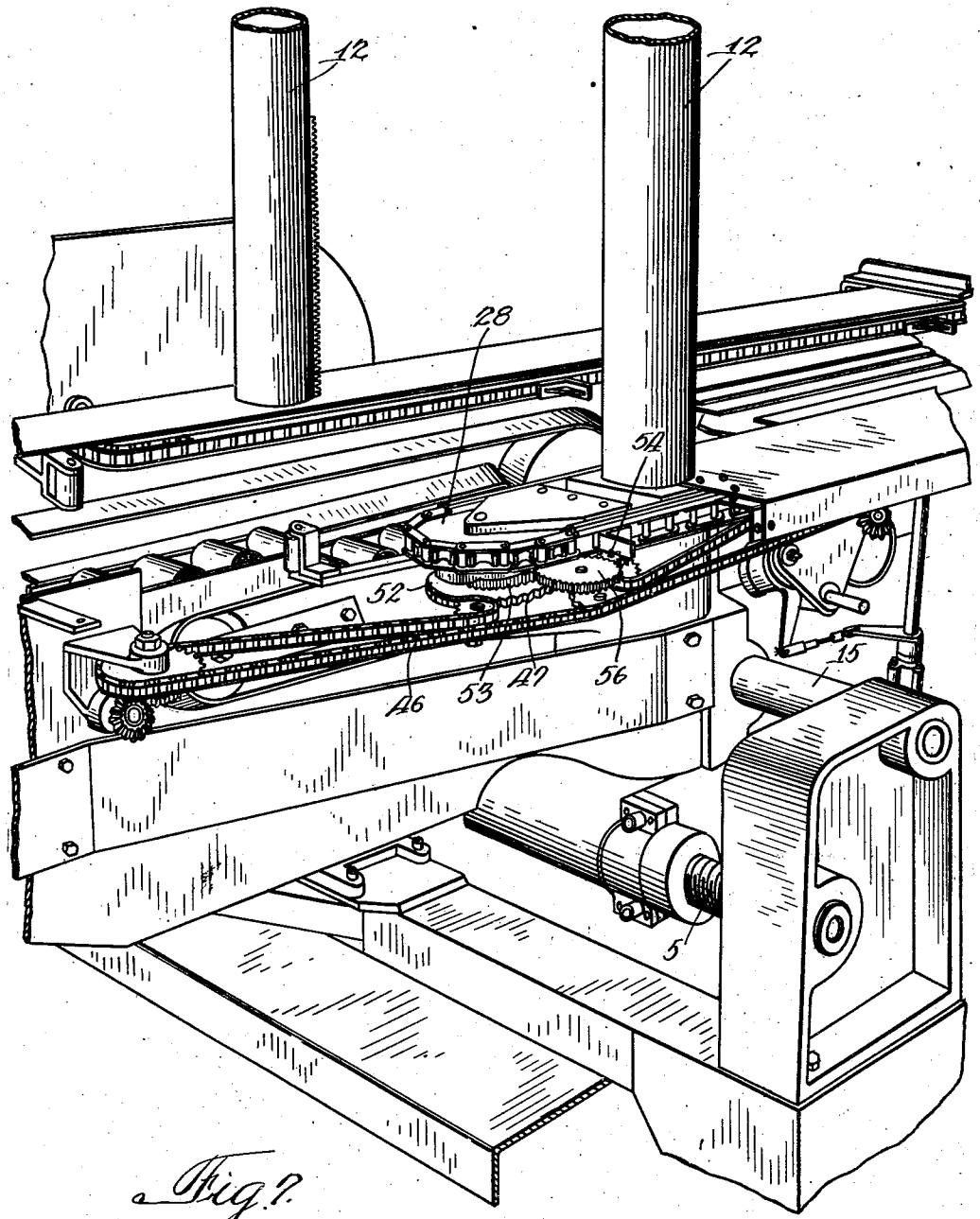

Fig. 7.

Inventor:
John L. Ferguson
By: Amos, Theiss, Olson & Mickelwait
Attys.

May 13, 1941. J. L. FERGUSON 2,242,177

CARTON SEALER

Filed March 11, 1939 20 Sheets-Sheet 8

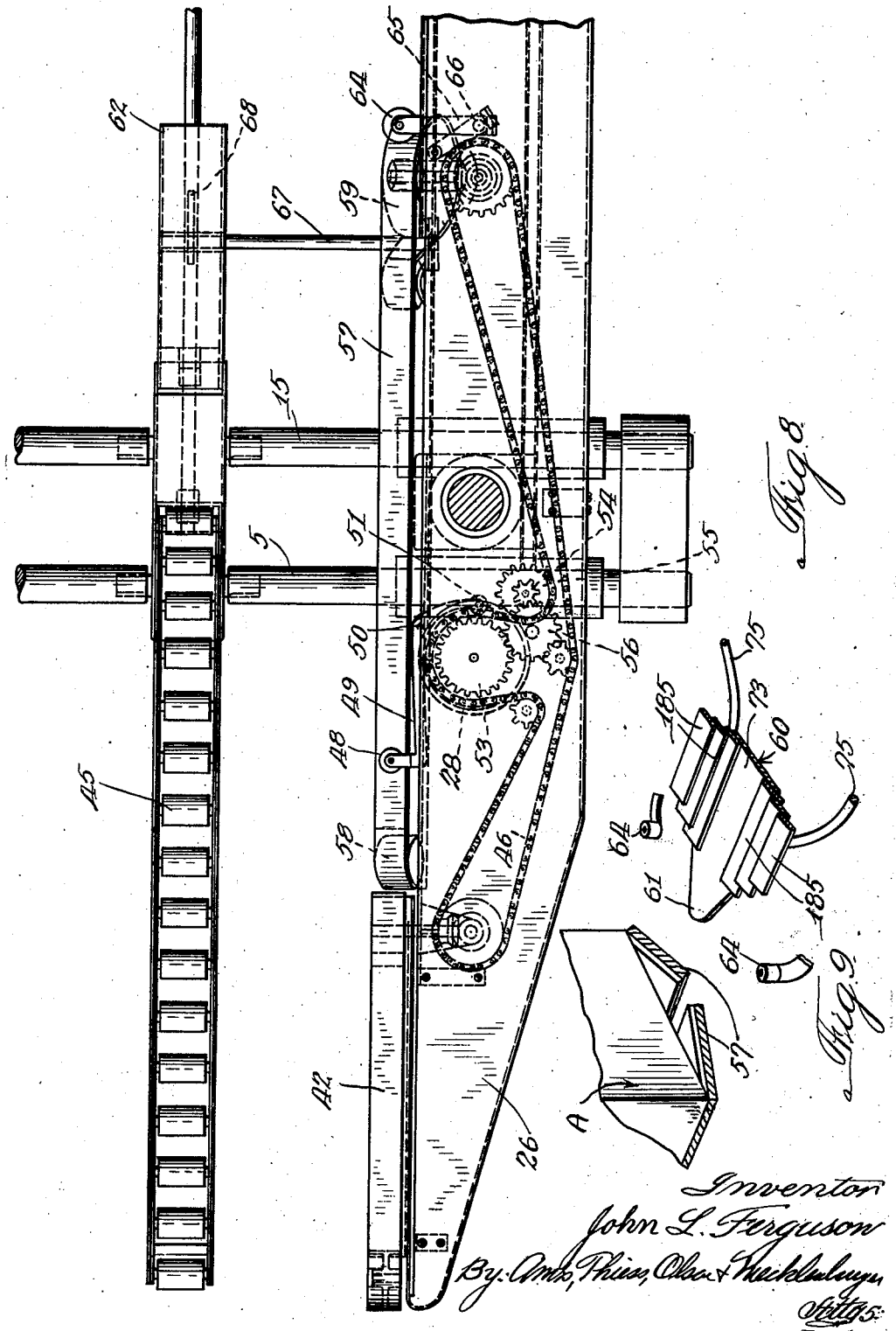

Fig. 8

Fig. 9

Inventor
John L. Ferguson
By: Amos, Thiess, Olson & Mecklenburger
Attys.

May 13, 1941. J. L. FERGUSON 2,242,177

CARTON SEALER

Filed March 11, 1939 20 Sheets-Sheet 9

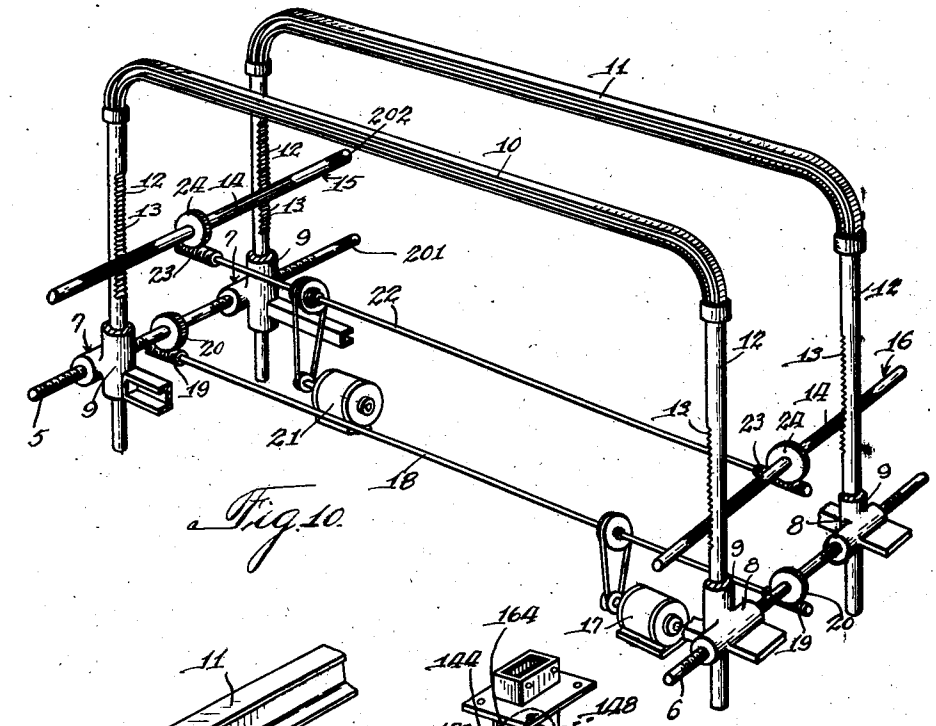

Fig. 10.

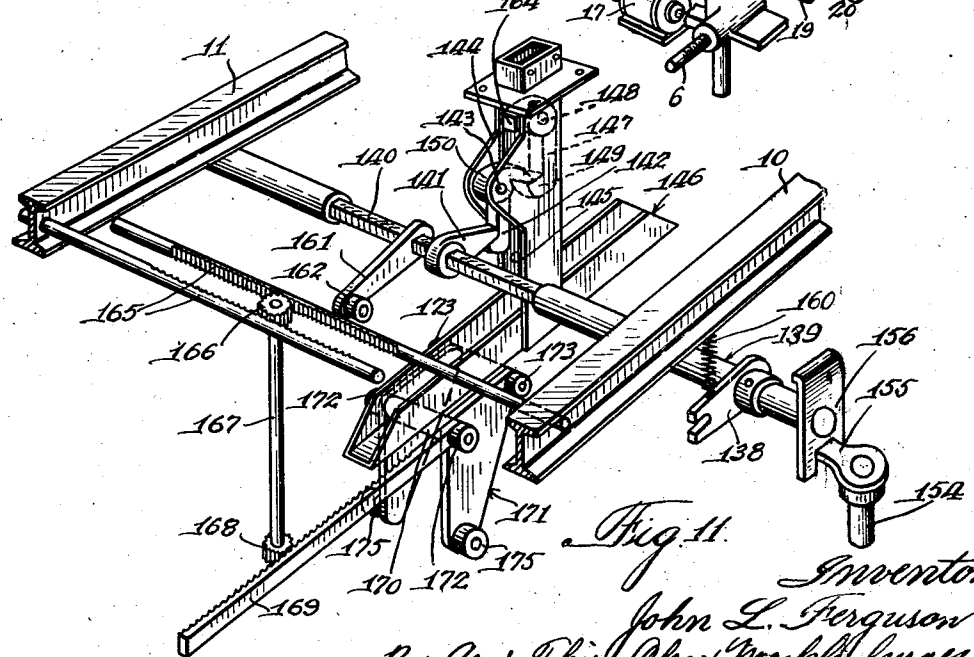

Fig. 11.

Inventor:
John L. Ferguson
By: Ames, Thiess, Olson & Mecklenburger.
Attys.

May 13, 1941. J. L. FERGUSON 2,242,177

CARTON SEALER

Filed March 11, 1939 20 Sheets-Sheet 10

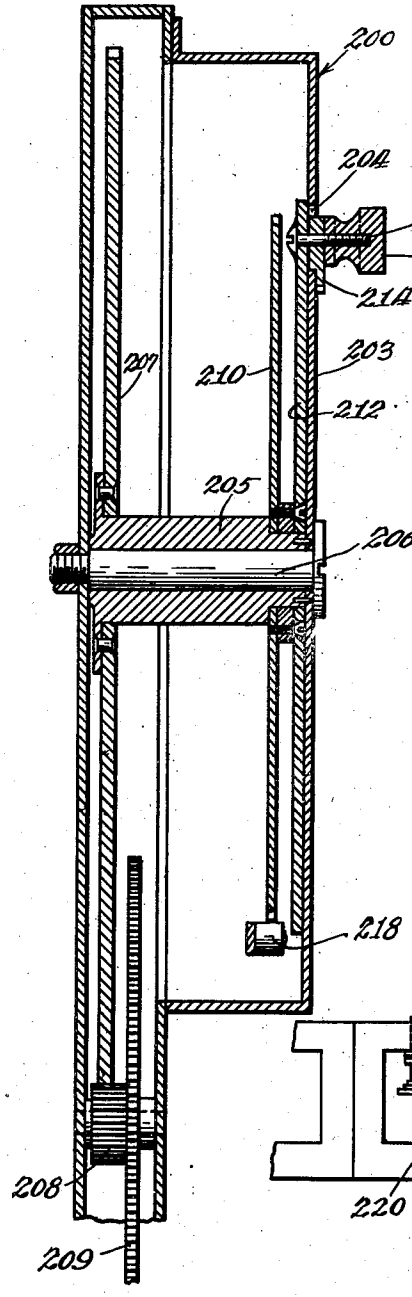

Fig 30.

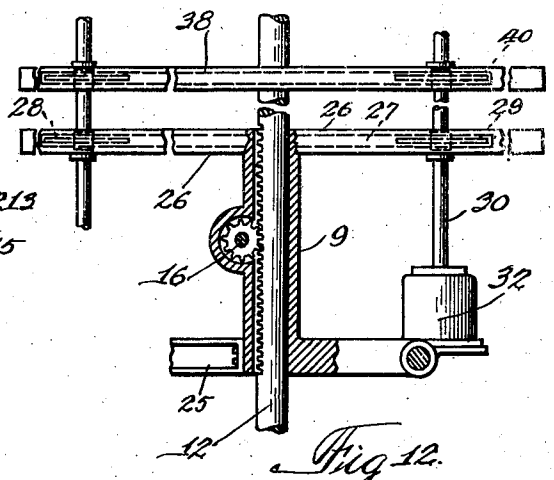

Fig 12.

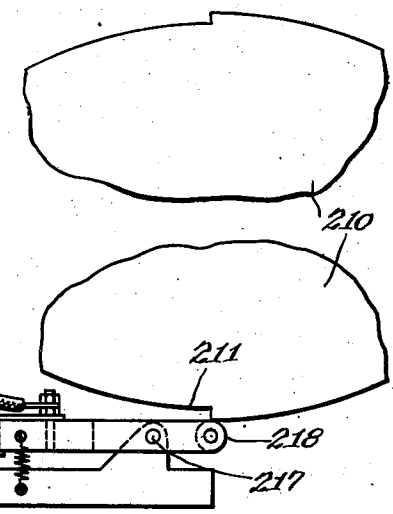

Fig 31.

Inventor:
John L. Ferguson
By: Amos, Reis, Olson & Mecklenburger
Attys.

May 13, 1941. J. L. FERGUSON 2,242,177

CARTON SEALER

Filed March 11, 1939 20 Sheets-Sheet 11

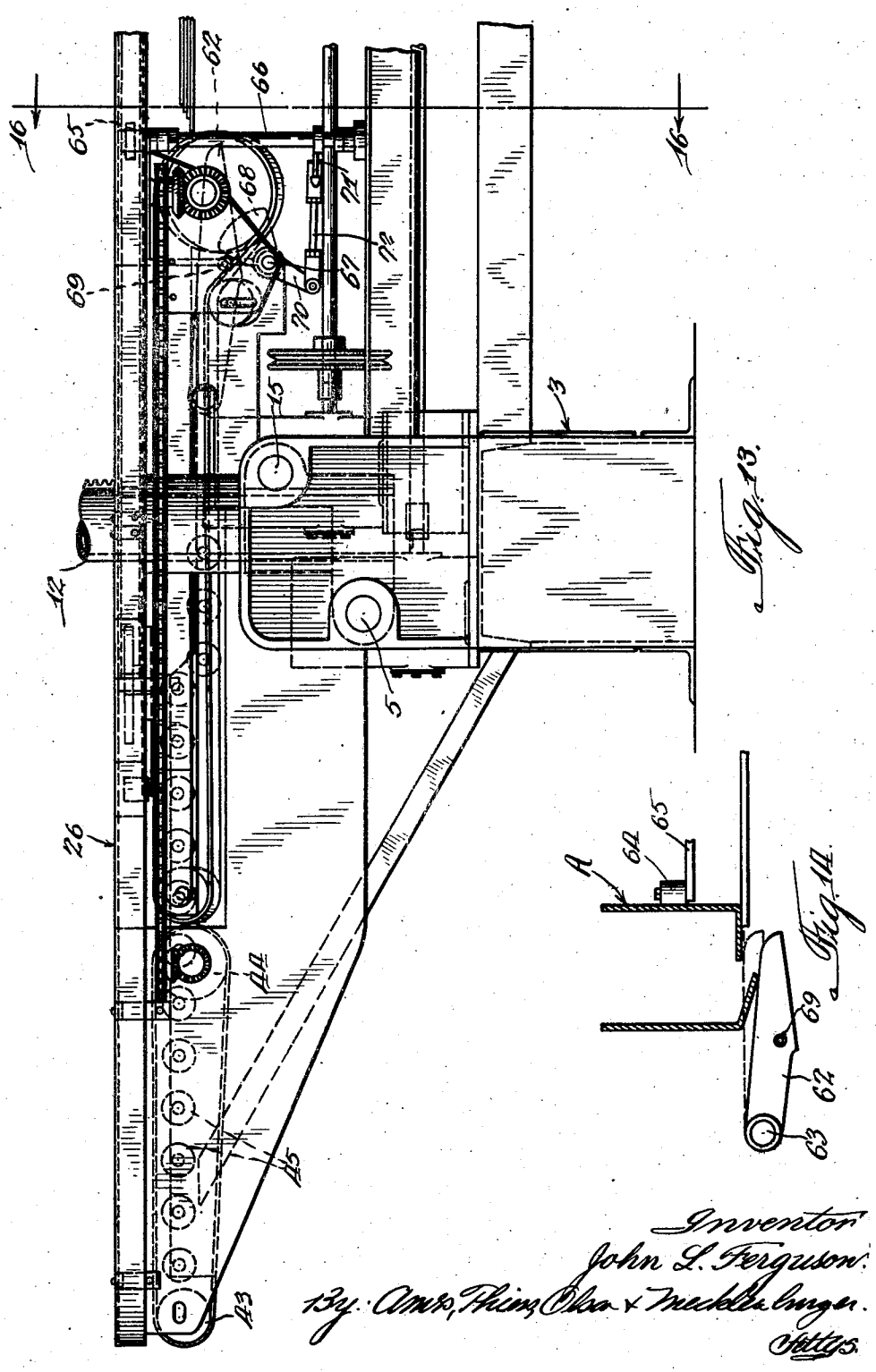

Fig. 13.

Fig. 14.

Inventor
John L. Ferguson.
By: Ames, Thiess, Olson & Mecklenburger.
Attys.

May 13, 1941. J. L. FERGUSON 2,242,177

CARTON SEALER

Filed March 11, 1939 20 Sheets-Sheet 12

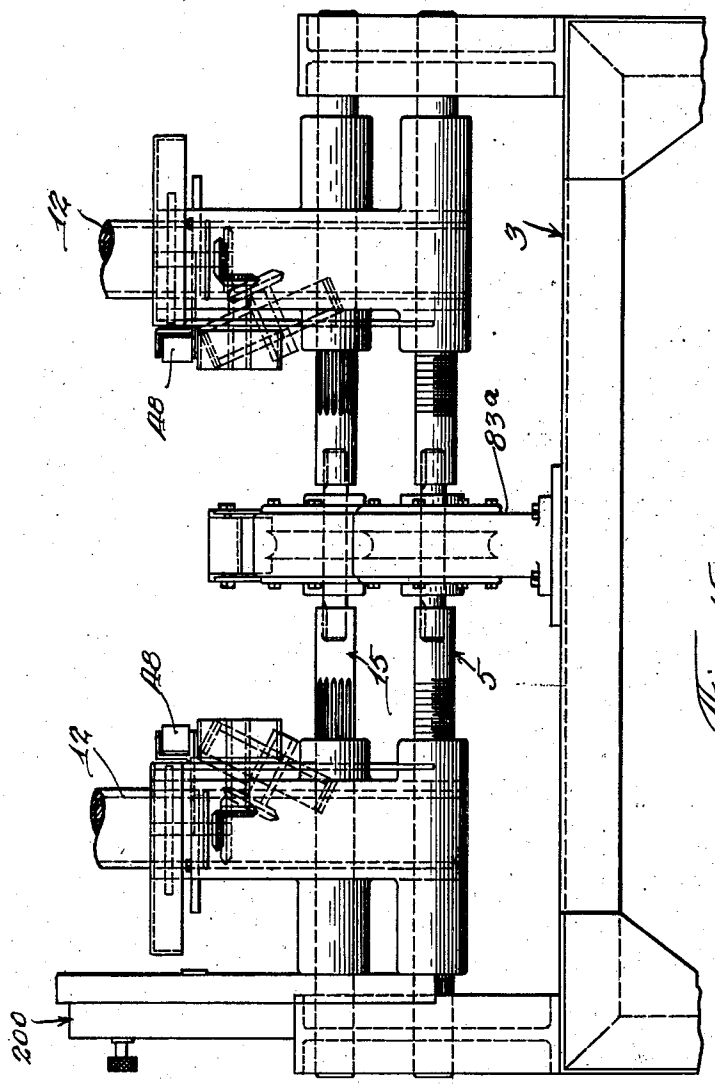

Fig. 15.

Inventor:
John L. Ferguson.
By: Amos, Thiess, Olson & Mecklenburger
Attys.

May 13, 1941. J. L. FERGUSON 2,242,177

CARTON SEALER

Filed March 11, 1939 20 Sheets-Sheet 13

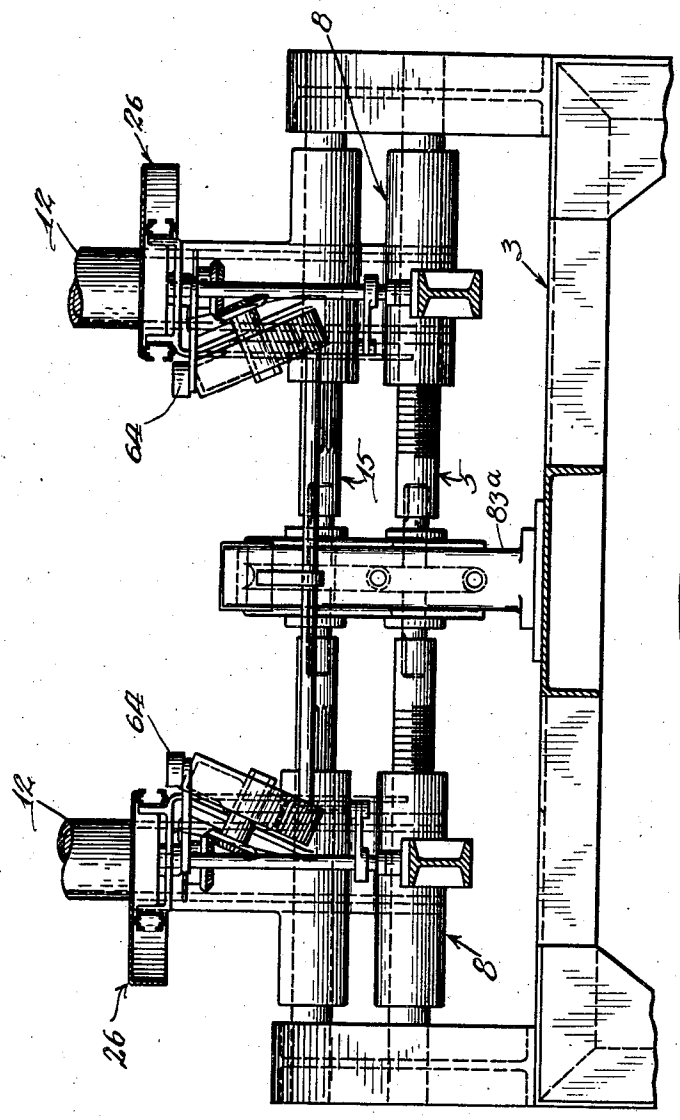

Fig. 16.

Inventor:
John L. Ferguson
By: Ames, Theis, Olson & Mecklenburger.
Attys.

May 13, 1941. J. L. FERGUSON 2,242,177

CARTON SEALER

Filed March 11, 1939 20 Sheets-Sheet 14

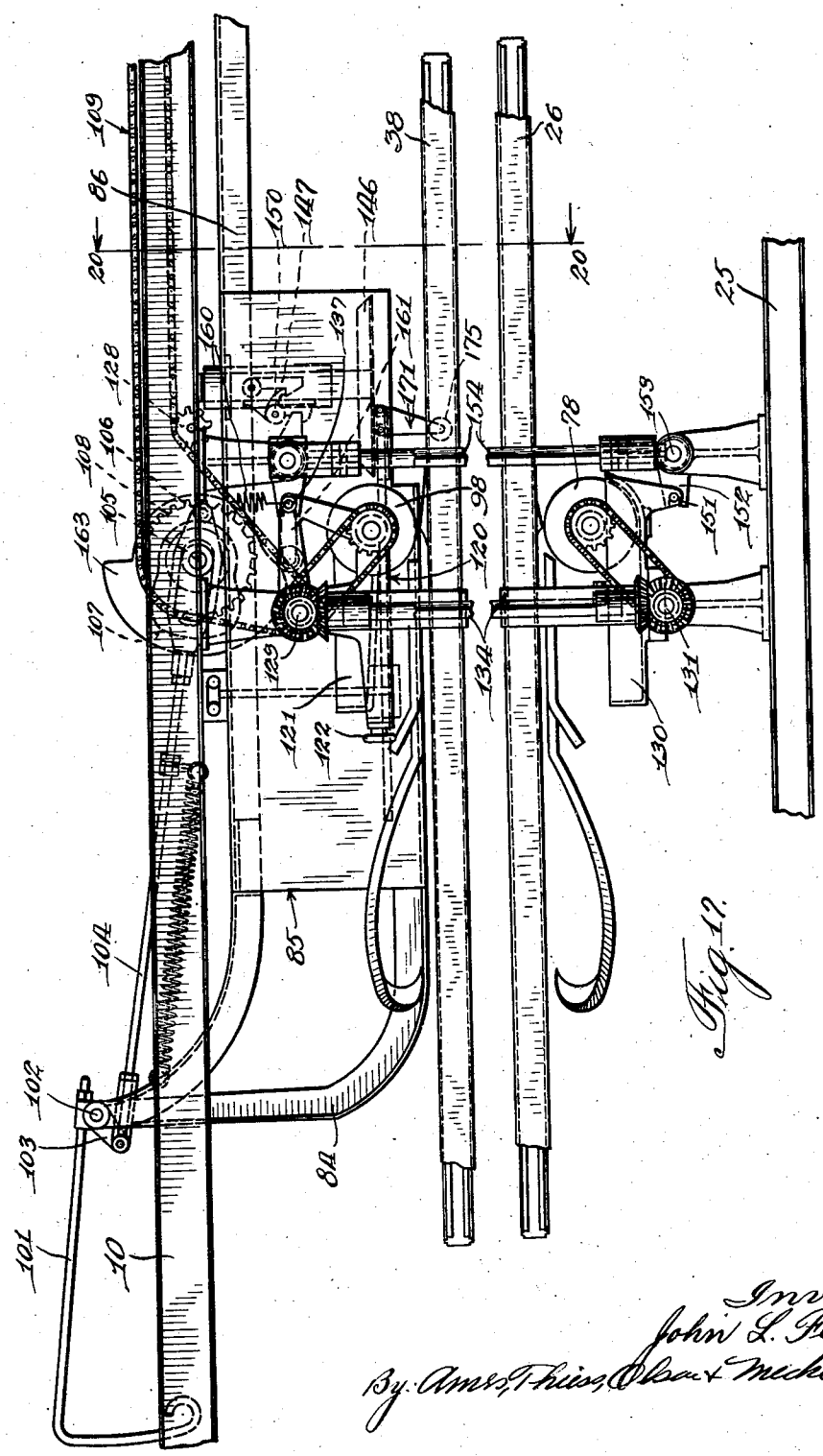

Fig. 12.

Inventor:
John L. Ferguson.
By Ames, Theiss, Olsen & Mecklenburger.
Attys.

May 13, 1941. J. L. FERGUSON 2,242,177

CARTON SEALER

Filed March 11, 1939 20 Sheets-Sheet 15

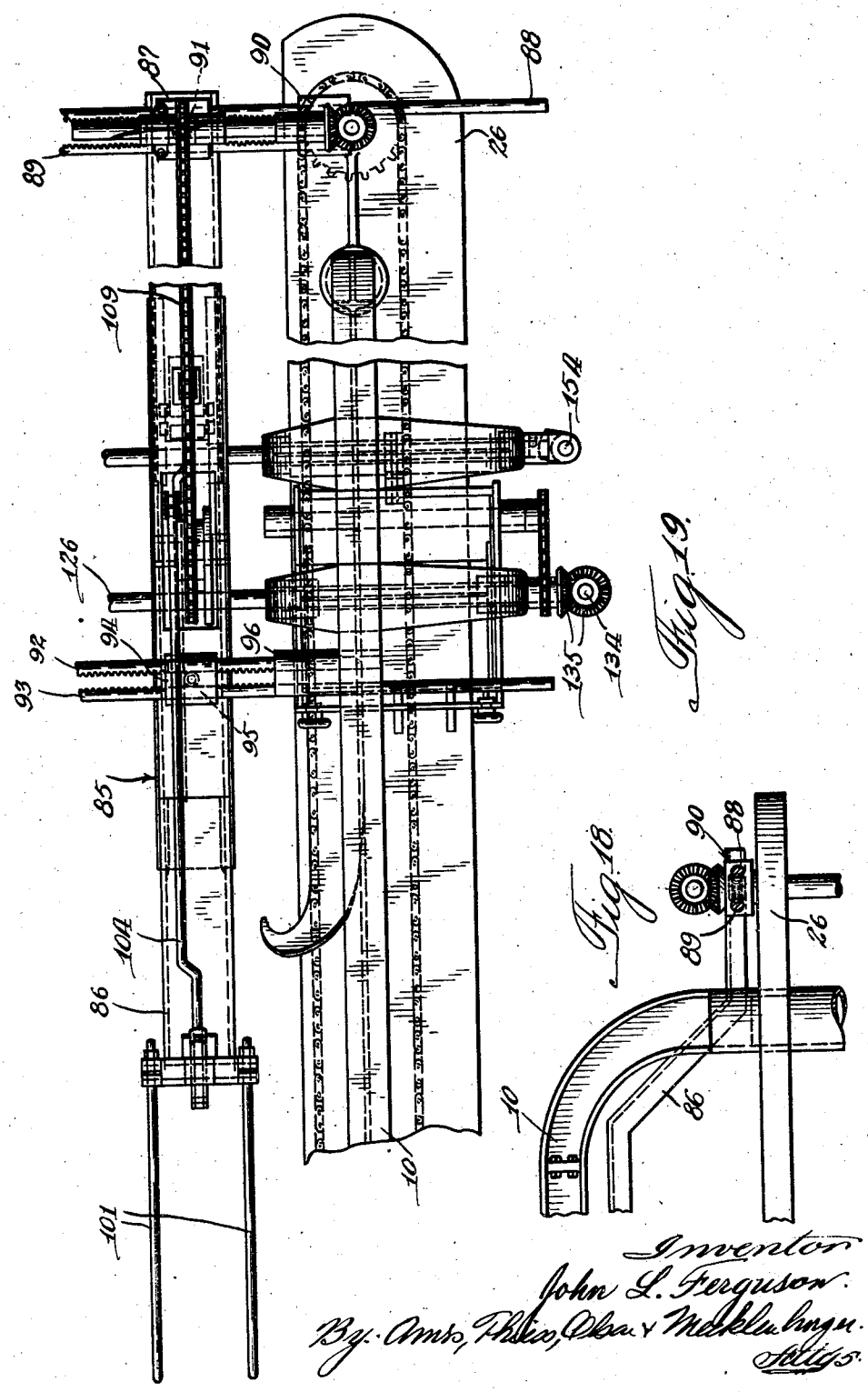

Fig. 19.

Fig. 18.

Inventor
John L. Ferguson.
By Ames, Thiess, Olson & Mecklenburger.
Attys.

May 13, 1941. J. L. FERGUSON 2,242,177

CARTON SEALER

Filed March 11, 1939 20 Sheets-Sheet 16

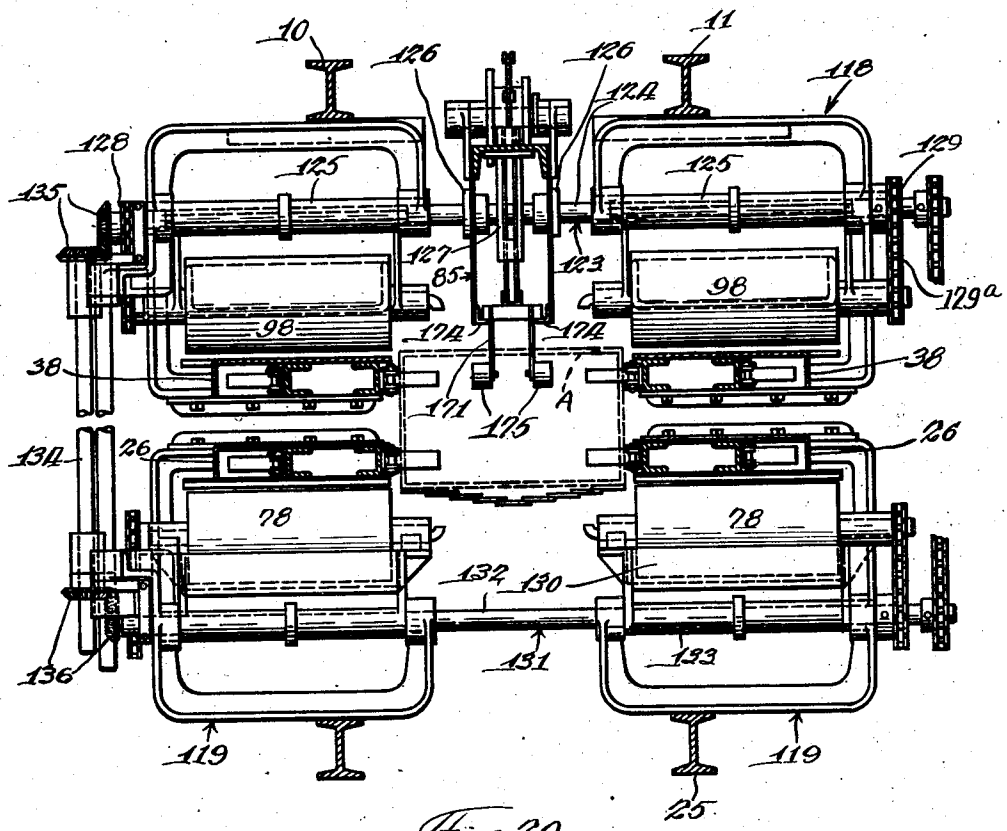

Fig 20

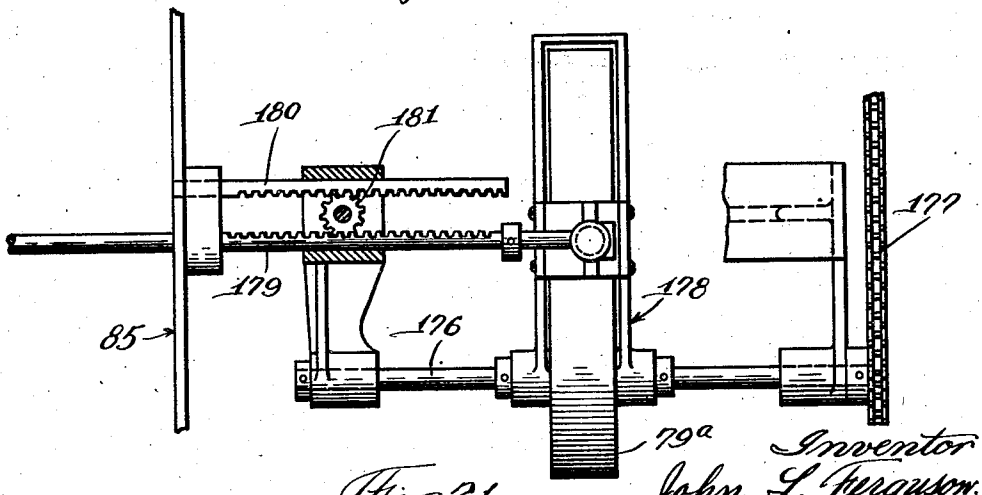

Fig 21.

Inventor
John L. Ferguson.
By: Arms, Thum, Alba & Mecklenburg
Attys.

May 13, 1941. J. L. FERGUSON 2,242,177

CARTON SEALER

Filed March 11, 1939 20 Sheets-Sheet 17

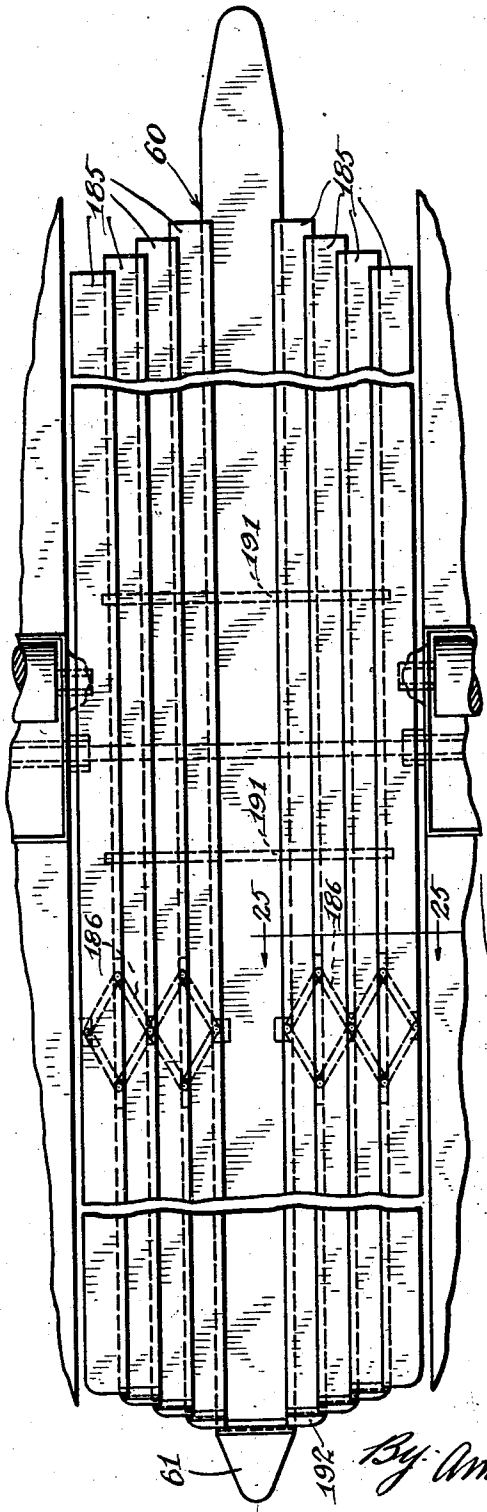

Fig. 22

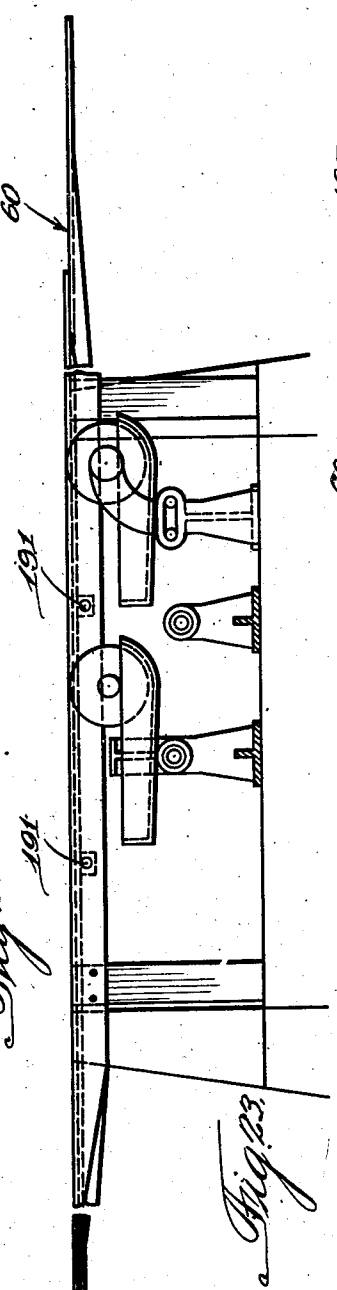

Fig. 23

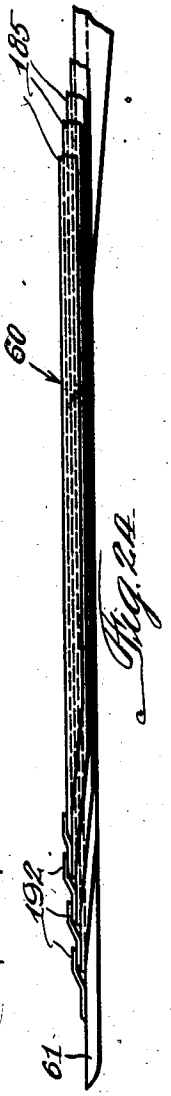

Fig. 24

Inventor:
John L. Ferguson:
By: Arnold, Thies, Olson & Mecklenburger:
Attys.

May 13, 1941. J. L. FERGUSON 2,242,177

CARTON SEALER

Filed March 11, 1939 20 Sheets-Sheet 18

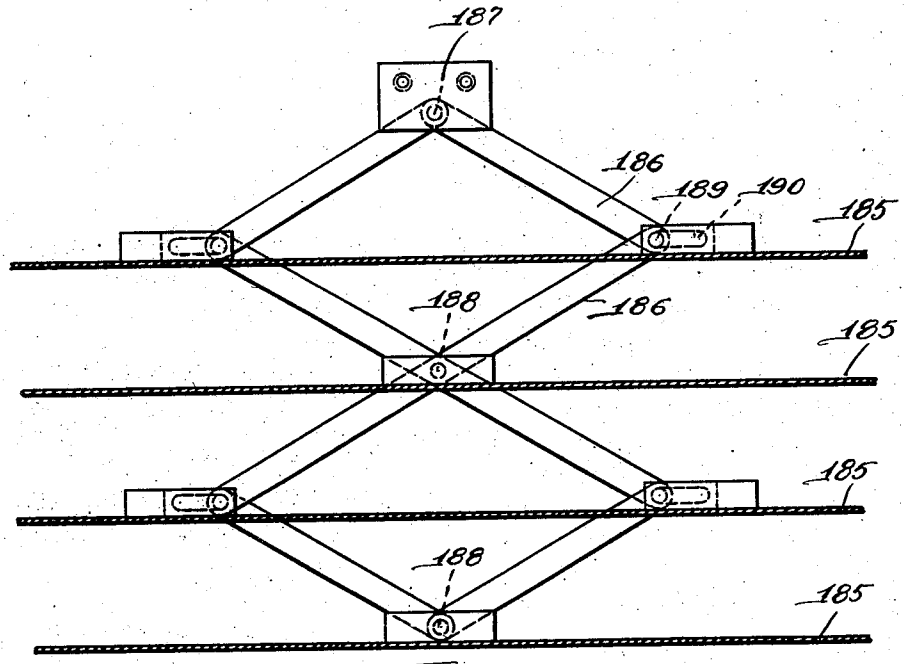

Fig. 26.

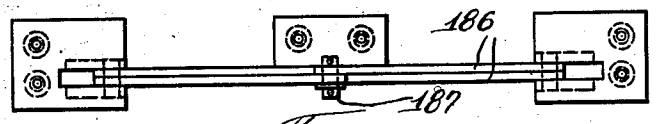

Fig. 27.

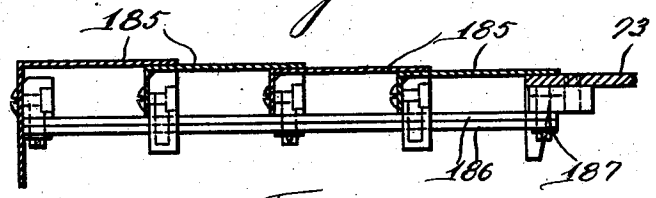

Fig. 25.

Inventor:
John L. Ferguson.
By: Amos, Reis, Olson & Mecklenburger
Attys.

May 13, 1941. J. L. FERGUSON 2,242,177

CARTON SEALER

Filed March 11, 1939 20 Sheets-Sheet 19

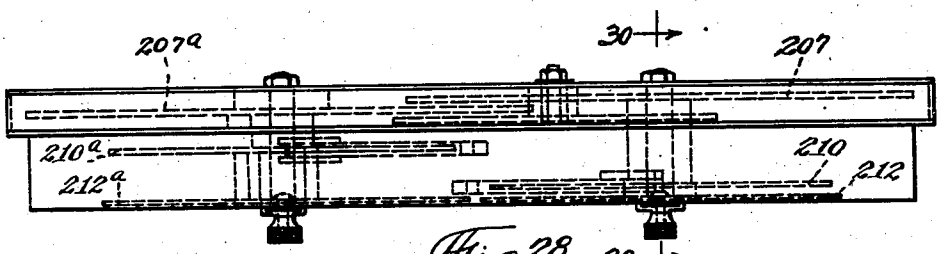

Fig. 28.

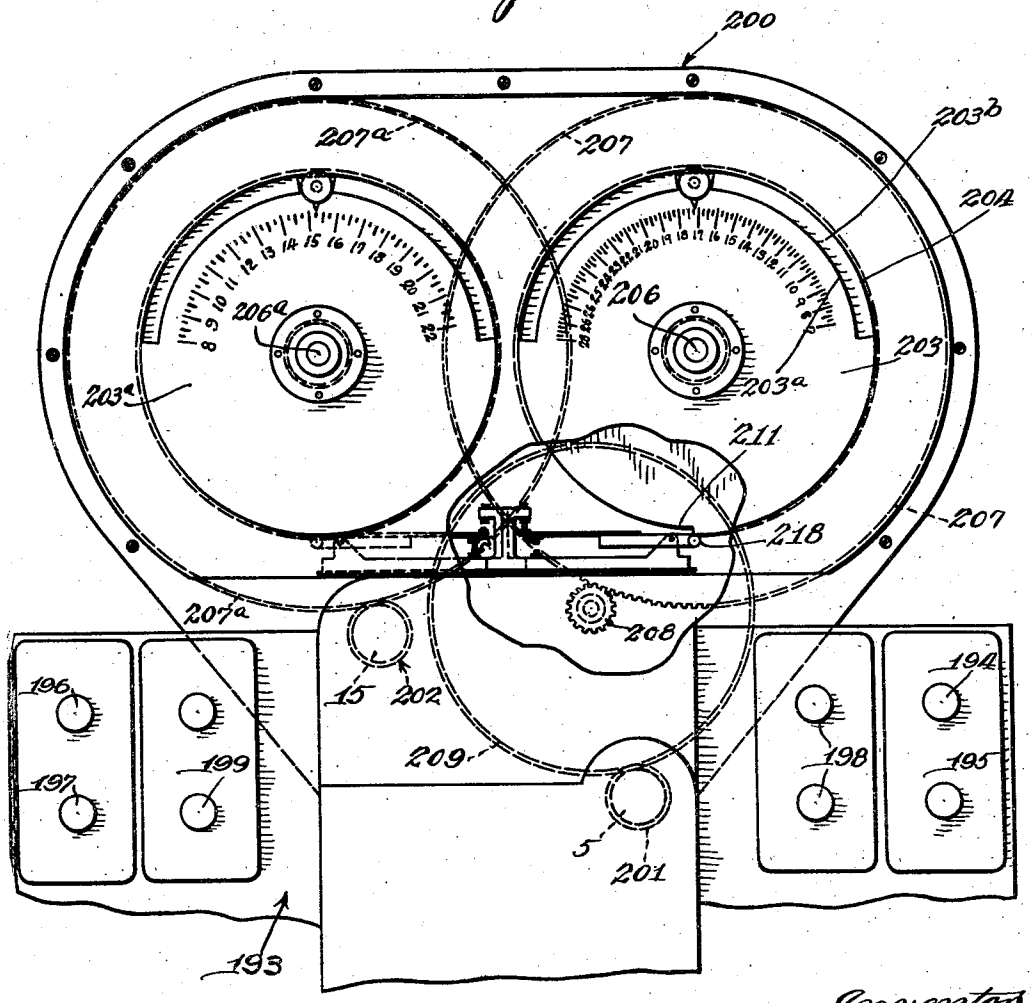

Fig. 29.

Inventor
John L. Ferguson.
By Ames, Thiess, Olson & Mecklenburger
Attys

May 13, 1941. J. L. FERGUSON 2,242,177

CARTON SEALER

Filed March 11, 1939 20 Sheets-Sheet 20

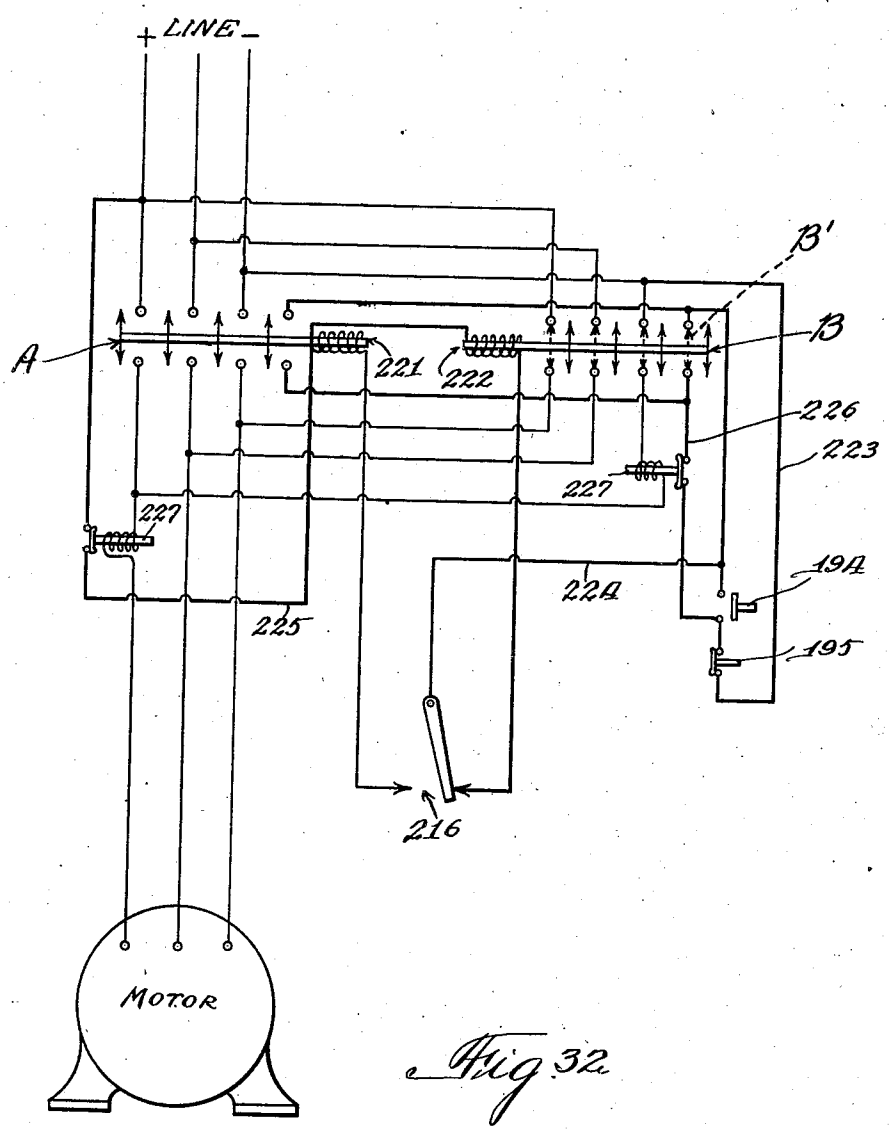

Fig 32.

Inventor
John L. Ferguson
By: Amos, Thies, Older & Mecklenburg
Attys.

Patented May 13, 1941 2,242,177

UNITED STATES PATENT OFFICE

2,242,177

CARTON SEALER

John L. Ferguson, Joliet, Ill., assignor to J. L. Ferguson Company, Joliet, Ill., a corporation of Illinois

Application March 11, 1939, Serial No. 261,180

37 Claims. (Cl. 93—6)

This invention relates to an adjustable case or carton sealer and the main object is to provide an automatically adjustable double sealer in which all or substantially all of the cooperating elements for conveying and sealing both ends of filled cases are automatically adjustable under the control of an operator to adapt the entire machine, including all of the mechanisms therein, to perform all of the double sealing operations required for completely sealing and delivering cases of any size within the limits of the machine.

It is also an object to provide a case or carton handling mechanism which is adaptable for quantity production and which may quickly be adjusted to perform substantially all required operations on any size cases within the limits of the machine; also, wherein the required adjustment may be predetermined by means of a minimum number of simple controls positioned for convenient operation by an attendant whereafter the entire operation will be automatic and the mechanisms will adjust themselves for cooperation with the predetermined cases without further attention.

Another object is to provide a new and novel control means for predetermining adjustment and having automatic reversing features whereby the control may automatically be reversed for predetermining adjustment in either direction from a given setting.

Further important objects of the invention will be apparent from the following brief description.

The machine is an elongated structure having suitable conveyors adapted to move cases of various sizes therethrough preferably in a horizontal plane. The cases may be delivered to the machine in closely adjacent consecutive order by any suitable conveyor or may be fed thereto by hand if desired. The machine itself comprises a base having mounted thereon a pair of elongated laterally and vertically adjustable frames, between which the cases are moved by suitable conveyors mounted on these frames and continuously driven from a suitable power source, preferably an electric motor mounted on the machine. The frames are so constructed that the lower portions thereof are only laterally adjustable and the upper portions comprise elongated inverted U-shaped members which are mounted on the lower portions and laterally adjustable therewith and vertically adustable independently of the lower portions.

The case conveyors and the sealing mechanisms and other devices, such as flap folders, etc., are mounted on the laterally and vertically adjustable frames and are suitably adjusted simultaneously with the adjustment of the frames to perform their functions with respect to any size case for which the frames are adjusted. Upper and lower horizontal conveyors are mounted on the frames and are laterally adjustable therewith to accommodate any predetermined width of case. The lower conveyors are mounted on the lower portions of the frames and are only laterally adjustable therewith in a fixed horizontal plane, while the upper conveyors are vertically and laterally adjustable with the upper U-shaped portions of the frames.

Suitable adjustment selectors are conveniently positioned for control by an operator. These selectors comprise graduated dials or movable members, preferably one for predetermining the desired lateral adjustment and another for predetermining a desired vertical adjustment. These two selectors may be positioned by the operator to correspond with predetermined lateral and vertical dimensions respectively corresponding to the size of containers to be sealed. The attendant then operates one or more switch buttons controlling individual motors for lateral and vertical adjustment, and the various parts of the mechanisms are then automatically adjusted to correspond with the setting of the selectors. Cases of the predetermined size to which the machine has been adjusted may then be passed therethrough and will be delivered therefrom completely sealed. The machine may, of course, be built to accommodate cases of any practical predetermined sizes.

The particular embodiment illustrated in the drawings is 17 feet long by 4 feet 6 inches wide, and the height when open to receive the largest container is 7 feet 3 inches and when closed down for the smallest container is 5 feet 4½ inches. The machine will accommodate containers from 8 inches to 22 inches wide, 7½ inches to 30 inches high, and 12 inches to 30 inches long, and requires less than one minute to change from the largest to the smallest container, or vice versa, and this adjustment may be accomplished without stopping the conveyor chains or glue rolls or other operating mechanisms which preferably are continuously operated by means of an independent motor for that purpose.

The selector controls for the vertical and horizontal adjustment are preferably mounted near the front or receiving end of the machine and may consist of dials marked with the container numbers or some such identifying symbols, and

an indicator manually movable about the dial. Upon setting either or both of the indicators to symbols corresponding with case dimensions and pressing a button or buttons located on the control panel, the machine will adjust itself automatically, coming to a stop at the desired case size. The adjustment in each direction is accomplished through a motor, speed reducers, racks and pinions in the case of the vertical adjustment, and a motor speed reducer, and screws in the case of the horizontal adjustment.

The control panel may comprise push buttons for the vertical and horizontal adjustment and a button for another motor which continuously drives the flight chains and glue rolls. The panel may also contain suitable automatic magnetic reversing switches for reversing the motors for the vertical and horizontal adjustment, all of the switches being suitably equipped with overload protection.

Briefly, the consecutive operations involved are as follows: The operator adjusts the selector devices to the container symbol corresponding to a predetermined size of container and presses the push buttons to cause a corresponding adjustment of the machine. After the machine is adjusted, the cases are preferably fed thereto by a suitable conveyer which continuously urges them to enter the machine. However, the front case engages a pair of timing rolls which hold all of the cases back until these rolls automatically move out of engagement with the front wall of the case. The case is then released onto a pair of belts sitting at an angle of about 25 degrees and traveling substantially 50% faster than the receiving conveyor belts. These high speed angular belts cause the released case to move ahead faster than the succeeding cases, thereby causing a gap between it and the case immediately following, into which space the timing rolls quickly move, holding the succeeding case back for a proper time interval, and this process is continuously repeated for properly spacing the cases as they pass through the machine.

When the cases are fed to the machine, they are usually filled with small containers or other merchandise, and the bottom flaps are closed but not sealed and the upper flaps are substantially vertical. As the case is moved on the angular belts, the bottom side flaps drop partially down to an angle corresponding to the angle of the belts. An elongated supporting plate is positioned in the median plane of the machine and the cases pass onto this plate with the closed bottom end flaps resting on the plate and the partially open side flaps under the supporting plate. A rear end-flap closer is provided for supporting the rear bottom end-flap as the case passes onto the support. Also, as the case passes onto the support, the bottom side flaps are turned outwardly by suitable means to a position substantially at right angles to the side walls of the container so that the flaps may properly be glued. Substantially simultaneously with the movement of the case onto the supporting plate and the spreading of the bottom side flaps, the upper end flaps are closed by suitable mechanisms and the upper side flaps are moved outwardly at right angles to the walls of the container and into gluing position.

The longitudinal supporting plate on which the cases slide as they pass through the machine comprises a plurality of oppositely disposed automatically adjustable leaves which slide laterally upon one another when the machine is being adjusted laterally and the plate thereby presents a solid continuous support which is always of a width relative to the width of the containers to which the machine is adjusted. This is an important feature in that the manufacturer of small items which are shipped in bulk can safely seal his cases without loss of small items enclosed therein.

The bottom end-flap lifter which supports the bottom end-flaps while the case is being moved onto the central support is automatically controlled by means of a pair of rollers which are engaged and pushed laterally by the container, thus causing the bottom flap lifter to raise and hold the rear flap up so that it will not be torn off by the entering nose of the supporting plate. This flap lifter also holds the contents of the case from dropping down below the plane of the supporting plate. Substantially at the same time that the case moves onto the supporting plate, it leaves the angle belts and is engaged by the flights on the horizontal conveyors. There are four flight chains, two top and two bottom conveyor chains with pushers or flights spaced, in the present embodiment, at about 39 inch centers. These flights are in lateral alignment, causing an equal push at the four corners of the rear panel of the case, which keeps the cases square at all times.

The upper rear flap tucker is timed with the conveyor chains and is automatically adjusted to close the rear flap of any case within the limits of the machine. After the rear flap is closed the case is in position to receive glue on the side flaps. The end flaps are closed and the side flaps are open at 90 degrees to the side walls. The gluing mechanisms are mounted adjacent the center of the machine and four mechanisms are provided, one for each side flap, and these mechanisms are automatically adjusted with the frame members so that they are always in position properly to apply adhesive to the flaps of any case to which the machine is adjusted.

The gluing mechanisms preferably are arranged to provide so-called skip gluing. As the case passes the gluing mechanisms and while adhesive is being applied, the front wall of the case operates a trip mechanism which releases the glue rollers, allowing them to move out of contact with the flaps after the glue has been applied for a distance of one-half of the width of the case and along the full width of the flap. After leaving an unglued space equivalent to the length of the case less the width of the case, the glue rolls again move into contact with the flaps and apply adhesive for the rest of the distance, which is also equal to one-half of the width of the case. The relationship between the length of glue spread on the ends of the side flaps, and the width of the case, is constant irrespective of the dimensions of the case. The length of the flaps on a lap-to-meet container is always one-half the width of the case. Therefore, irrespective of the length of the case, it is necessary to apply adhesive on each end of each side flap for a distance equal to one-half the width of the case to get the greatest area of gluable surfaces together. Any greater glued area than that might cause the contents of the case to be damaged and would be a waste of adhesive. Any less would be sacrificing good usable gluing surfaces.

To accomplish the skip gluing operation, two separate and independent mechanisms are provided for controlling the glue rolls. The first separates the glue roll from the flap. This is

accomplished by means of a latch normally holding the glue rolls in contact with the flaps and which is tripped by the front of the container. The trip actuating the latch is mechanically connected with the horizontal adjustment of the machine so that it is always one-half the case width back of the center line of the glue rollers. Thus, when the front end of the side flaps has moved that distance under the glue rolls, the case trips the latch and the rollers leave the flaps and cease to apply adhesive. If the location of the front of the container relative to the glue rolls determines the length of the glue spread on that end, then the location of the rear of the container may govern the length of the spread at that end. Therefore, a cam is provided to push the glue rollers back onto the flaps, again latching them there until released by the front of the next case passing therethrough. The cam is driven by a suitable mechanism and is mechanically connected with the horizontal adjustment, whereby the radial position of the cam is advanced or retarded in accordance with the width of the case, thereby keeping constant the relation of the length of glue spread to the width of case.

Some cases have overlapping flaps. However, what is true of lap-to-meet cases is also true of overlap cases with one exception. The length of the flaps is one-half the width of the case plus one-half the overlap. Therefore, the length of the glue spread will be one-half the overlap less than the length of the flaps. In the present embodiment, an auxiliary glue roll is provided for gluing the overlap portion of one flap over the full length of the overlap. From the main glue rolls, the case passes on toward the auxiliary glue rolls, which applies a strip of adhesive approximately 1½ inches wide on the outer edge of one top flap and one bottom flap only. This is done only on cases having overlapped flaps, and the overlap rollers are movable out of the way when running lap-to-meet cases. The position of the overlap rollers is always directly related to the width of the flaps and the rollers automatically are adjusted horizontally twice the adjusted distance of the main glue rollers. This keeps them always in a position to glue the same width on all overlap cases or to miss on lap-to-meet cases.

After passing the glue rollers, the side flaps are closed by means of a set of fixed folders, the glued ends of the side flaps coming in contact with the end flaps, and, when overlapping flaps are used, the flap with the narrow strip of glue along its outer edge overlaps the edge of the other side flap, thereby completely sealing the case.

After the cases are sealed they may be discharged into any suitable drier or between horizontal belts which should be of sufficient length to retain the flaps closed until the glue is set. The drier may consist of a top and bottom belt and the top section may be arranged for simultaneous vertical adjustment with the sealer and may be controlled by the same vertical control means if desired. The drier, however, is not shown in the drawings and any suitable mechanism may be used for adjusting the drier in accordance with the vertical adjustment of the sealer.

A further object is the provision of an automatic double sealer particularly adapted for quantity production which is provided with convenient controls for predetermining the adjustment and in which the adjustment may be accomplished in a minimum amount of time.

Further objects will be apparent from the specification and the appended claims.

In the drawings:

Fig. 1 is a perspective view of one embodiment of the invention and is taken from a position adjacent the discharge end of the machine.

Fig. 2 is a perspective view of the receiving end of the machine and illustrates the machine adjusted for sealing narrow cases.

Fig. 3 is a perspective view of the machine taken from the discharge end and with the machine adjusted for sealing wide cases, portions being broken away for purposes of illustration.

Fig. 4 is a perspective view of the discharge end of the machine with the entire machine adjusted for sealing very small cases.

Fig. 5 is a perspective view of the glue-roll mechanisms on one side of the machine and illustrates the adjustable transmission for the glue rolls and skip gluing control.

Fig. 6 is a perspective view of the gluing mechanisms on the opposite side of the machine from that shown in Fig. 5 and particularly illustrates the auxiliary glue rolls for overlapping side flaps.

Fig. 7 is a perspective view of one of the feed belt driving mechanisms and associated case timing device.

Fig. 8 is a top plan view of the belt driving and timing mechanism illustrated in Fig. 7.

Fig. 9 is a fragmentary detail view of one end of the case-supporting plate and an advancing case and illustrates the manner in which the lower flaps are partially opened to enable the case to be moved onto the support.

Fig. 10 is a diagrammatic perspective view illustrating the frame adjusting mechanism.

Fig. 11 is a detail perspective view illustrating the mechanism for controlling the movement of the glue rolls to provide skip gluing.

Fig. 12 is a side elevation partly in section and illustrates one of the adjustable conveyor supports.

Fig. 13 is a side elevation of a portion of the receiving end of the machine and illustrates particularly the mechanism for operating the lower flap lifter to retain the bottom end-flaps closed during movement of the case onto the central support.

Fig. 14 is a fragmentary detail view illustrating the operation of the flap lifter.

Fig. 15 is a fragmentary view of a portion of the receiving end of the machine as seen from the left-hand side of Fig. 13 and illustrates the construction of a portion of the frame adjusting transmission and the method of driving the case-supporting belts, including the angular belts and case timing rollers.

Fig. 16 is a sectional view taken on a line substantially corresponding to line 16—16 of Fig. 13 and particularly illustrates the mechanism for operating the lower flap-supporting device.

Fig. 17 is a fragmentary side elevation and illustrates the skip gluing mechanism, glue roll drive, and timing mechanism.

Fig. 18 is a continuation of the right-hand end of the framework illustrated in Fig. 17 and illustrates a portion of the fixed central support and the aligning mechanism for the centrally positioned tucker and glue roll cam.

Fig. 19 is a top plan view of one of the upper gluing devices and associated mechanism.

Fig. 20 is a transverse sectional view through the machine taken on a line substantially corre-

sponding to line 20—20 of Fig. 17 and illustrates the glue roll mechanisms and interconnected transmission therefor.

Fig. 21 is a fragmentary detail view of one of the auxiliary glue rolls for overlap cases and illustrates the automatic adjusting mechanism therefor.

Fig. 22 is a top view of the laterally adjustable case support and is illustrated expanded for supporting a wide case.

Fig. 23 is a side elevation of the supporting shelf illustrated in Fig. 22.

Fig. 24 is a side elevation of the front end of the case support illustrated in Figs. 22 and 23.

Fig. 25 is a sectional view through a portion of the case support and taken on a line substantially corresponding to line 25—25 of Fig. 22.

Fig. 26 is a fragmentary top view of a portion of the case support shown in Fig. 22 with the leaves broken away to illustrate the lazy tong mechanism for equalizing the expansion of the support.

Fig. 27 is a side elevation of the lazy tong arrangement illustrated in Fig. 26.

Fig. 28 is a top view of the adjustment selector casing with the selector mechanism illustrated in dotted lines.

Fig. 29 is a side elevation of the selector mechanism shown in Fig. 28 with a portion of the casing broken away to illustrate the switching arrangement.

Fig. 30 is a transverse sectional view through one of the selectors and is taken on a line substantially corresponding to line 30—30 of Fig. 28.

Fig. 31 is an enlarged size elevation of the switching mechanism and associated tripping disc.

Fig. 32 is a diagram of one of the electrical control arrangements.

Referring to the drawings in detail, the embodiment illustrated comprises a supporting frame 1 which preferably consists of a framework having elongated longitudinal bars 2 secured at their ends to laterally extending base members 3 and 4 positioned adjacent the receiving and discharge ends, respectively, of the machine. The supporting frame, including the longitudinal bars 2 and end bases 3 and 4, may support the entire mechanism, including the selector controls, which latter may be mounted on one of the end bases, preferably adjacent the receiving end of the machine, whereby it may conveniently be controlled by an operator.

A transverse shaft 5 is mounted in suitable bearings on the base member 3 at the receiving end of the machine, and a similar transverse shaft 6 is similarly mounted on the base 4 at the discharge end of the machine, as shown in Figs. 1, 2, 4, and in the diagrammatic view Fig. 10. The shafts 5 and 6 have oppositely disposed end portions oppositely threaded, and laterally movable members 7 are slidably mounted in spaced relation and in threaded engagement with the shaft 5 located at the receiving end of the machine. Similar oppositely disposed members 8 are mounted on the shaft 6 at the discharge end of the machine and in similar threaded engagement with the oppositely threaded portions of the shaft 6. The members 7 and 8 are simultaneously laterally adjustable in opposite directions on their respective shafts by rotation of the shafts.

Each of the members 7 and 8 is provided with a vertical bearing portion 9, (Fig. 10). A pair of elongated U-shaped frame members 10 and 11 are provided with downwardly extending tubular portions 12 which are telescopically mounted in the bearing portions 9 of the laterally adjustable members 7 and 8 and are, therefore, laterally adjustable with those members. The tubular portions 12 are provided with racks 13 which are operatively engaged by pinion portions 14 on transverse shafts 15 and 16, respectively, which shafts are also rotatably mounted on the base members 3 and 4, respectively, in the same manner as the threaded shafts 5 and 6. The laterally movable members 7 and 8 and the U-shaped frames 10 and 11 telescopically mounted therein for vertical adjustment may be moved laterally in opposed relationship in either direction by means of a reversible motor 17 which may be mounted on the frame in any suitable manner. The motor 17 is arranged to drive a longitudinal shaft 18 by means of a belt and suitable pulleys. The longitudinal shaft 18 may be supported in suitable bearings on the fixed base and provided at each end with a worm 19, each worm meshing with a corresponding worm gear 20 on each of the threaded shafts 5 and 6. The reversible motor 17 is provided with a suitable electrical control which will be described later and by which it may selectively be operated for any desired lateral adjustment of the U-shaped members 10 and 11.

The transverse shafts 15 and 16 having the pinion portions 14 thereon in mesh with the racks on the tubular portions 12 of the U-shaped members may be driven in either direction selectively by a reversible motor 21 arranged to drive a longitudinal shaft 22 by means of a belt and suitable pulleys. The longitudinal shaft 22 may be mounted in suitable bearings on the fixed base and provided at each end with a worm 23 meshing with a corresponding worm wheel 24 on each of the pinion shafts 15 and 16. The motor 21 is provided with a selective electrical control similar to that mentioned in connection with the motor 17. Therefore, the pinion shafts 15 and 16 may be operated in either direction to vertically adjust the U-shaped members 10 and 11 selectively in either direction.

Each pair of adjustable members or brackets 7 and 8 is connected together by means of longitudinal bars 25 (Figs. 1 and 12) for longitudinal spacing of the opposed brackets and, although the upper portion of these brackets is shown broken away in the diagrammatic view in Fig. 10, they are constructed to extend upwardly as in Fig. 12 and each pair supports a longitudinally disposed shelf 26. These shelves may be constructed in any suitable manner and are preferably hollow structures having a suitable cover and are arranged to enclose oppositely disposed horizontal conveyor chains 27. The conveyors 27 are supported on suitable sprockets 28 and 29 at opposite ends of the machine. The sprockets 28 adjacent the receiving end are merely idler sprockets in suitable bearings in the shelves 26. The two sprockets 29 at the discharge end of the machine are secured, respectively, to vertical shafts 30 and 31 (Figs. 1, 3, 4 and 12) and these shafts are constantly driven through speed-reducing mechanisms 32 which latter are connected by means of chains 33 and suitable sprockets to a transverse shaft 34. The speed-reducing mechanisms 32 are mounted on the brackets 9 and the drive sprockets on the shaft 34 are slidable thereon with the brackets. The shaft 34 may constantly be driven from a motor 35 (Fig. 4) through a belt 36 and suitable pulleys

on the motor shaft and on the shaft 34. The motor 35 may be controlled by means of a push button or switch and is used merely for continuous operation of the conveyor mechanism and other mechanisms not concerned with the control of adjustment. The motor 35 may, of course, be mounted on any suitable portion of the frame.

The adjustable U-shaped frame members 10 and 11 are provided, adjacent the upper ends of the telescopic rack portions 12, with suitable brackets 37 (Figs. 1 and 12) on which are supported suitable upper longitudinal conveyor shelves 38, which shelves may be constructed similar to the lower shelves 26, and which enclose the upper conveyor chains 39 (Fig. 3). These upper chains are mounted on sprockets in exactly the same manner as the lower chains 27, except that the driving sprockets 40 at the discharge end of the machine are feather-keyed to the respective shafts 30 and 31 so that they are driven thereby but slide thereon during vertical adjustment of the supporting frames and the upper conveyor chains thereon.

All of the chains are provided with spaced flights 41 thereon for conveying the cases through the machine. The upper gluing and flap-folding mechanisms are supported on the conveyor shelves 38 and on the upper longitudinal portions of the U-shaped frame members 10 and 11, and are vertically and transversely adjusted therewith. The lower glue roll mechanisms and flap folders and certain other control devices are supported on the lower shelves 26 and on the longitudinal bars 25 and are adjusted laterally therewith, these lower shelves and mechanisms thereon not requiring any vertical adjustment.

As previously stated, the cases to be sealed may be delivered to the receiving end of the machine by a suitable conveyor or placed therein by hand. The cases are preferably delivered in closely adjacent relationship by means of a suitable conveyor whereby the advancing front case is delivered onto a pair of spaced belts 42 (Figs. 2, 8, and 13) mounted on suitable pulleys 43 and 44. The lower flaps of the cases are supported on suitable rollers 45 positioned between the belts 42. The belts 42 operate at the same speed as the conveyor chains. Each belt 42 is driven from its associated conveyor by means of a chain 46 (Figs. 7 and 8) meshing with a sprocket 47 secured to the appropriate idler sprocket 28 on which the particular conveyor chain 27 is mounted. The chain passes around this sprocket in driven relation thereto and is arranged to drive other mechanisms which will be described later. The belts 42 are driven by identical mechanisms, each mechanism supported in its respective conveyor shelf, and it is thought unnecessary to illustrate or describe more than one of these mechanisms. Each belt 42 is driven from its drive chain 46 by a suitable sprocket and bevel gear transmission, as shown in dotted lines in Fig. 8 and in full lines in Fig. 7.

As a case is advanced by the belts 42, it engages timing rollers 48 (Figs. 2 and 8) which hold the case back until the proper moment to proceed. Each timing roller 48 is mounted on a lever 49 pivoted at 50 (Fig. 8) and provided with a cam roller 51 engaging a cam 52 (Figs. 7 and 8) secured to a gear 53, which latter is rotatably mounted on the stub shaft to which the conveyor sprocket 28 and belt-driving sprocket 47 are secured. The sprocket 53 and cam 52 secured thereon are driven from the belt 46 by means of a chain of gears comprising a sprocket 54 meshing with the chain 46, a pinion 55 secured to the sprocket, and an idler gear 56 meshing with the pinion and with the cam gear 53. By this means the timing rollers will intermittently be withdrawn from the path of the cases and the timing movement is such that the rollers will drop into the space between the cases as they are advanced. The timing levers 49 are normally urged outwardly to move the rollers into the path of the cases by any suitable spring means, not shown. As each case is released by the timing rollers, it passes onto a pair of angularly positioned belts 57 which are supported on suitable pulleys 58 and 59 (Figs. 2 and 8) and these angularly positioned belts are driven at a speed substantially 50% greater than the belts 42. The rapid advancement of the case by the angle belts causes a gap between the case thereon and the succeeding case and the timing rollers 48 drop into this space, thereby holding back the succeeding container until a suitable time for its release.

Each belt 57 is driven from the corresponding chain 46 by means of a sprocket and bevel gear transmission connected with the pulley 59. The transmission is similar to that for driving the belts 42 and is also shown in dotted lines at the right-hand side of Fig. 8. The angularly positioned belts 57 permit the bottom side-flaps of the case to drop downwardly and assume an angular position corresponding to that of the belts, as shown in Fig. 9. This enables the case, in its forward movement, to move onto a longitudinally positioned central support 60 having a pointed end 61 for entering the opening between the side flaps and the end flaps of the case. When the bottom side-flaps open for the case to pass onto the longitudinal support 60, it is desirable to support the inturned end flaps so that the point 61 will not catch the rear end flap and also so that none of the contents of the case may be lost. In order to support these end flaps at that time, a so-called flap lifter is provided and comprises a movable member or shoe 62 which is pivoted at 63 and is normally in the lowered position shown by full lines in Fig. 14. This shoe is raised to the dotted line position to support the end flaps by means of the engagement of the case with rollers 64 in the path of the case (Figs. 2, 8, 13, 14, and 16). Each roller 64 is secured to an arm 65 on a downwardly extending vertical shaft 66 supported on its respective conveyor frame. A transverse shaft 67 is positioned below the shoe 62 and provided with a cam 68 secured thereto which engages a roller 69 on the shoe 62. The shaft 67 is provided with a downwardly extending arm 70 secured thereto and connected to an arm 71 on the shaft 66 by means of an adjustable link 72. Therefore, rotary movement of the shaft 66 by the case moving the rollers 65 out of their path will move the cam 68 to raise the shoe 62 and thereby support the lower end flaps during the movement of the case from the angular belts 57 onto the central support 60.

The central longitudinal case support 60 is formed of overlapping leaves and the central strip portion 73 is rigidly mounted on suitable brackets on the base frame of the machine so that it is always located in the central longitudinal plane thereof. The outer leaves are secured to brackets 74 on the laterally adjustable side members 25 (Fig. 1), whereby the support is laterally extended or contracted in accordance

...ng mechanisms, and ...ent past the ...es, after which the case is ...ll the machine. The structure of ...pport will be described in detail later.

As the case moves onto the supporting member **60** and the lower side-flaps leave the angular belts, the side flaps are engaged by flap ...ers **75**. These spreaders may be ... central strip **73** of the ... be in the form of th... to open th...

...stantial... gaged an... shoes **84** ...ical and the fro... on a narr...d inwardly ... median pla... and ... positioned o... the machi...

central frame supporting bar 86. The shaft 102 is provided with a downwardly extending arm 103 to which is connected an adjustable link 104 (Fig. 17) which is slotted at its free end for support on a short shaft 105 supported in suitable bearings on the bar 86 and frame 85. The free end of the link 104 is provided with a roller 106 in engagement with a cam 107 secured to the shaft 105. A sprocket 108 is secured to the shaft 105 and the cam is driven by means of a chain 109 (Figs. 1, 3, 4, and 17) which engages the sprocket 108. The chain is supported on suitable idlers and extends rearwardly and downwardly toward the discharge end of the machine, where it is driven by means of a sprocket 110 which is rotatably mounted in a fixed bearing 111 (Figs. 1, 3, and 4). The sprocket 110 is provided with an enlarged hub having a bore therethrough to receive a stub shaft 112 having a substantially spiral groove 113 therein. The hub on the sprocket 110 is provided with a feather-key engaging in the spiral groove 113, whereby the sprocket will be radially adjusted relative to the shaft 112 whenever the machine is laterally adjusted to thereby simultaneously radially adjust the cam 107 and operate the tucker 101 in timed relation to the cases of any predetermined size. The grooved shaft 113 is supported in a suitable bearing 114 on one of the upper conveyor shelves 38 and may be driven from the conveyor drive shaft 30 by means of bevel gears 115.

After the case passes the glue rolls, which are arranged to provide suitable skip gluing, the side flaps are folded inwardly and sealed by means of curved folding rods 116 (Figs. 1 and 4), which rods may be secured to the upper conveyor shelves and operate to fold the flaps in the same manner as the lower folding rods 80. The upper flaps are retained in sealed relationship by means of a rearwardly extending plate 117 (Figs. 4 and 18) secured to the downturned end of the central frame supporting bar 86 and the case may be discharged therefrom into a suitable drier as previously described.

The upper gluing mechanisms each comprise a framework 118 (Figs. 1, 5, 6, 17, and 20) secured to the respective U-shaped supports 10 and 11 and to the upper conveyor shelves 38. The lower mechanisms comprise similar frames 119 secured to the laterally adjustable longitudinal bars 25 and the lower conveyor shelves 26. These lower gluing mechanisms are similar to the upper ones, but are constructed to apply adhesive to the under surface of the lower flaps passing thereover, while the upper mechanisms are arranged to apply adhesive to the upper surface of the flaps passing thereunder.

The upper glue rolls 98 are each mounted in suitable bearings in an auxiliary frame 120 which supports a glue box 121. The glue box may be adjusted relative to the roller by means of thumb screws 122. The auxiliary frame 120 and glue roller and box supported thereon are pivotally mounted on a telescopic shaft 123 (Figs. 17 and 20) which is mounted in suitable bearings in both oppositely disposed frames 118. That is, this shaft extends completely through the machine, but is provided with a central portion 124 (Fig. 20) having squared ends which telescope in squared openings in the end portions 125, the end portions 125 being mounted in suitable bearings in the frames 118. The central portion 124 is mounted in suitable bearings 126 in the side walls of the central frame 85 and a sprocket 127 is secured to the central portion 124 within the frame 85. The chain 109, which drives the tucker cam, extends downwardly around the sprocket 127 and over a suitable idler 128 (Fig. 17), thereby continuously rotating the shaft 123. Each end of the shaft 123 is provided with a sprocket 129 and the glue rolls 98 are driven therefrom by means of a suitable sprocket on the glue roll shaft and a chain 129a. The lower glue rolls 78 are mounted in suitable bearings on the glue box or frame 130, which box is pivoted on suitable bearings which may be concentric with a second telescopic shaft 131. All of the glue boxes and the glue rolls thereon are pivoted as described for movement to and from the flaps by means of a mechanism which will be described later.

The lower telescopic shaft 131 is similar to the upper telescopic shaft 123. That is, it is provided with a central portion 132 with squared ends which are telescopically supported in squared openings in end portions 133, these end portions being mounted in suitable bearings in the glue mechanism frames 119. The shaft 131 is driven from the upper telescopic shaft 125 by means of a vertical shaft 134 (Figs. 5, 17 and 20) mounted in suitable bearings on the upper and lower glue roll frames and connected in driving relation by means of the upper bevel gears 135 and similar lower bevel gears 136. The shaft 134 is fixed against longitudinal movement in the upper bearing and telescopes through the lower bevel gear 136 and is squared or provided with a feather-key connection therewith. By this transmission arrangement, vertical and lateral adjustment may be accomplished without disturbing the driving relationship between the telescopic shafts, and it will be apparent that all of the glue rolls may be continuously operated even during vertical or later adjustment of the machine.

As previously stated, the glue rolls are all pivotally mounted by means of the supporting frames or glue boxes so that the upper rolls may momentarily be raised and the lower rolls lowered to provide so-called skip gluing. This raising and lowering of the glue rolls must be accomplished in timed relation to the movement of the containers through the machine and in accordance with the size of the containers in order to provide uniform skip gluing for all containers.

The rolls are normally held in glue applying position as shown in Fig. 17. The auxiliary frame 120 on which the upper glue roll and box is supported is provided with a roller 137 which is engaged in the forked end of an arm 138 (Figs. 11 and 17) secured to a telescopic shaft 139 which extends through the machine and is provided with telescopic portions in the same manner as the glue roll drive shafts previously described.

The shaft 139 has an intermediate telescoping portion 140 and a detent pawl 141 is secured thereto within the intermediate frame 85 and substantially in the medial plane of the machine. The pawl arm 141 is normally supported on a detent pawl 142, which is pivoted at 143 on a fixed support 144. This fixed support encloses the upwardly extendng arm 145 of an inverted T-shaped vertically slidable member 146, on which a pawl 147 is pivoted at 148. The pawl 147 has a laterally extending end 149 arranged to engage an overlapping tail 150 on the detent pawl 142 when the slide member 146 is raised, thereby releasing the arm 141 from the detent

pawl. When this release takes place, the upper rolls are raised and the lower rolls are lowered simultaneously for the reason that the weight of the glue rolls and glue boxes is so distributed relative to their pivotal mounting that the operation will be controlled by gravity when they are released. The lower glue roll is provided with a roller 151 which engages in a forked arm 152, which is secured to a telescopic shaft 153 mounted in suitable bearings in the lower glue roll frames 119. This shaft may be substantially identical with the upper shaft 139 and is operated simultaneously therewith by means of a vertical squared shaft 154 mounted in suitable bearings on the upper and lower glue roll frames. The upper end of the shaft is provided with an inwardly extending arm 155 engaged in a slot in a depending arm 156 secured to the upper shaft 139. Therefore, the vertical shaft 154 may be oscillated with and by the transverse shaft 139. The squared portion of the shaft 154 is telescopically mounted in a lower bearing 157 on the lower glue roll frame and also telescopes through an inwardly extending arm 158 which is engaged in a forked arm 159 secured to the lower telescopic shaft 153. By means of this connection between the two shafts and the forked arms 138 and 152 supporting the upper and lower rolls, respectively, the movement of the rolls may be synchronized and the upper and lower rolls are all normally held in gluing relationship by means of the detent pawl 142 and the connections just described.

As previously stated, the weight of the glue rolls and the pivoted frames on which they are supported causes them to move from the normal gluing position and away from the flaps when the detent pawl 142 releases the mechanism. However, a spring 160 may be provided which will assist in moving the rolls when the mechanism is released.

In order to return the rolls to gluing position after a predetermined length of skip, an arm 161 is secured to the upper shaft 140 and provided with a roller 162. This roller is in vertical alignment with a cam 163 secured to the short tucker cam shaft 105 which is supported on top of the central frame 85. When the glue roll mechanism is released by the detent pawl 137, the arm 161 and roller therein are raised with the raising of the upper glue roll. This brings the roller 162 into the path of the cam 163. The cam, during its revolution, engages the roller 162, thereby pushing the arm 161 downwardly and resetting the glue roll mechanisms, whereby they are retained in gluing position by means of a detent pawl 142 until the slide 146 is again raised to release the detent pawl.

As previously stated, the detent pawl 142 is released from the arm 147 by raising the hook-like pawl 147 which engages the tail of the detent pawl. It is desirable that the hook-like pawl 147 release the detent pawl immediately after it is raised. Therefore, the hook pawl 147 is provided with a laterally extending lug 164 which, after the detent pawl releases the glue rolls, engages the upper portion of the frame 144, thereby causing the detent pawl to be released. When the slide 146 is again lowered, the hook pawl 147 again engages under the tail 150 of the detent pawl and in a position to again release the detent pawl during the next raising operation.

It will be apparent that the slide 146 must be raised to release the glue rolls in timed relation to the cases and in accordance with the size of the cases passing through the machine. Therefore, a mechanism has been provided for raising the slide 146 in a desired timed relation, which relation is proportional to the lateral adjustment of the machine. A pair of inwardly extending spaced racks 165 is provided (Fig. 11) and one of these racks is secured to each U-shaped frame member 10 and 11 so that they move laterally therewith. A pinion 166 is positioned between these racks and in mesh therewith and secured to a vertical shaft 167 which is provided at its opposite end with a pinion 168. The pinion 168 is in mesh with a longitudinally positioned rack 169 secured to a short shaft 170, on which a depending frame 171 is pivoted. The shaft 170 is provided with rollers 172 and the forward end of the frame 171 is also provided with rollers 173. The rollers 172 and 173 are arranged to movably support the frame on inwardly extending angle irons 174 of the central frame 85. The rack 169 may, of course, be longitudinally mounted in suitable guides.

The depending side portions of the frame 171 (Fig. 11) are provided with rollers 175 which are positioned in the path of any case which passes through the machine, as shown in Fig. 20. The T-shaped slide member 146 rests on the frame 171 or may be supported closely adjacent thereto by means of any suitable stop member. When a case, as shown by dotted lines A in Fig. 20, engages the lower rollers 175, the frame 171 will be tilted on the shaft 170 and the front end of the frame will raise the T-shaped slide 146, thereby releasing the glue rollers and allowing them to move away from adhesive applying position. The lower rollers 175 will slide over the top of the case and drop therefrom with the passing of the rear wall, and the T-shaped slide 146, glue rolls, and connecting mechanism will return to the normal adhesive-applying position. It will be apparent that lateral adjustment of the frames 10 and 11 will cause the racks 165 (Fig. 11) and the transmission connected with the tilting frame 171 to position this frame so that the skip gluing operations will be performed in accordance with the adjustment of the machine for each predetermined size of container.

As previously stated, the auxiliary rolls 79 and 79a are preferably only used on one side of the machine. They are shown in detail in Figs. 6 and 21. It is not necessary that these rolls should be provided with a skip gluing mechanism. The upper roll 79a is slidably mounted on a feather-keyed shaft 176 which is rotatably mounted in suitable bearings on the glue roll frame. This shaft is driven from the upper telescopic glue roll drive shaft 123 by means of a chain 177 and suitable sprockets, as shown in Fig. 6. The upper glue roll 79a is provided with a suitable glue box frame 178 which is also slidably mounted on the shaft 176 and provided with an inwardly extending rack 179 (Fig. 21). An outwardly extending rack 180 is secured to the inner central frame 85, and a fixed idler pinion 181 is mounted on the glue roll frame and in mesh with the two racks as shown. Therefore, when the machine is laterally adjusted, the glue roll 79 is moved through the rack and pinion to assume a glue-applying position corresponding to the size of overlap container to which the machine is adjusted. The lower auxiliary glue roll 79 is mounted on the lower glue roll frame in the same manner that the upper roll is mounted on the upper frame and is supplied with a substantially identical position controlling mechanism. The lower

roll is provided with a glue box 182 (Fig. 6) which is positioned somewhat differently with respect to the roll in order that glue may be applied upwardly instead of downwardly, as is the case with the upper auxiliary roll. The lower roll is mounted on a shaft 183 and is driven from the lower telescopic glue roll driving shaft 131 by means of suitable sprockets and a chain 184.

The central case-supporting plate 60 comprises an elongated central expansible supporting shelf, on which the cases are supported and slide as they pass through the machine, and is illustrated in detail in Figs. 22 to 27, inclusive. This support comprises a central elongated plate 73 which is preferably more or less pointed at each end, as illustrated, the end 61 being for the purpose of entering between the side flaps and the bottom flaps as the case moves onto the support and the opposite end being tapered to enable the glued flaps to be partially folded before the case leaves the support. The support is laterally expansible and contractible with the adjustment of the machine, and, in order to accomplish this, the central member 73 is fixedly supported on the fixed frame of the machine by suitable brackets as previously described.

A series of sheet metal overlapping side members or leaves 185 is provided and secured to the central shelf 173 by means of a lazy tong member comprising pivoted bars 186. The inner ends of the lazy tongs are pivoted to the support 73 at 187, and the remaining central pivots are pivoted to alternate leaf members at 188. The outer pivots 189 of the lazy tongs are mounted in slots 190 in suitable blocks secured to alternate leaf members as shown. The leaves are supported by and are slidable on suitable transverse shafts 191 which extend through the downwardly extending flanges of the leaves with their ends secured to the base of the machine in such a manner that they do not interfere with the passage of the flaps of the cases thereover. The outer leaves on each side of the support are secured to the laterally adjustable frames also in a manner to permit free movement of the case flaps. Therefore, the entire support will expand and contract in accordance with the lateral adjustment of the machine. Any suitable number of lazy tong elements may, of course, be provided. The front end of the central support 73 and each overlapping leaf is provided with a sheet metal overlapping member 192 and these overlapping members are related as in Figs. 22 and 24 to enable the cases to pass onto the support without catching on the front ends of the leaves.

The control means and selector device for controlling the starting and stopping of the motors and for predetermining an adjustment to correspond with any desired size of case to be sealed may comprise a panel board 193 (Figs. 2 and 29), on which may be mounted all necessary selecting and controlling devices for the electric circuits used for controlling the various motors. The circuits may include suitable overload relays and magnetic starting and stopping devices. Push buttons 194 and 195 may be provided for respectively starting and stopping the motor 21 for driving the horizontal adjusting mechanism. In a similar manner, push buttons 196 and 197 are provided for starting and stopping the motor 17 for the vertical adjustment. These push buttons are only used after the adjustment has been predetermined by the selecting device, and ordinarily it is only necessary to start the motors by means of the push buttons, the reversing and stopping of the motors being automatically controlled by the selector and associated switching devices.

Push buttons 198 may be provided to start and stop the motor 35 for continuously driving the conveyors and gluing mechanism. Also, other push buttons such as 199 may be used for controlling any additional motors such as for operating a suitable case driving machine used in connection with the present embodiment.

The selector comprises a casing 200 which may be supported on the panel board or on one of the end bases, such as the base 3 (Fig. 2). The selector mechanism, after being set to predetermine a desired adjustment, is automatically operated and controlled by the horizontal transverse shafts 5 and 15 (Figs. 2 and 10). It will be apparent from the following description that this selector mechanism may be operated from either end of these shafts or may be positioned at the discharge end of the machine, if desired, and operated by means of the transverse shafts 6 and 16. In the present instance, the shafts 5 and 15 are each provided at their outer ends with pinion portions such as pinion 201 on shaft 5 and pinion 202 on shaft 15.

Independent selector controls are provided for horizontal and vertical adjustment. These mechanisms are enclosed within the case 200, and a separate electrical control is provided for each adjustment. The control circuit is illustrated diagrammatically in Fig. 32. The selector for the horizontal adjustment comprises a graduated dial 203 which is positioned in an opening 204 in the side of the casing 200, as shown in Figs. 29 and 30. This dial 203 is cut away at 203*a* for substantially one-half of its circumference in order to provide an arcuate opening 203*b* between the dial and the edge of the opening 204 in the casing. The dial is rigidly secured to a hub 205 rotatably mounted on a stub shaft 206 secured to the back of the casing as shown. A gear 207 is secured to the hub 205 and is in mesh with a pinion 208 integral with an intermediate gear 209, which latter gear is in mesh with the pinion portion 201 on the shaft 5. Therefore, whenever the shaft 5 is rotated in either direction for adjustment of the machine, the dial 203 will be rotated relative thereto. The gear ratio in the selector mechanism is such that the movement of the shaft for total adjustment of the machine in either horizontal direction will cause one-half a revolution of the dial 203.

A cam disc 210 is rotatably mounted on the hub 205 (Fig. 30) and this cam disc is cut away for one-half of its circumference, as shown at 211 (Fig. 31). A second disc 212 is rigidly secured to the disc 210 and is movable therewith. This disc 212 serves as a handle for adjusting the position of the disc 210 relative to the hub and dial thereon and is made in disc form in order to cover the arcuate opening 203*b* between the edge of the dial 203 and the wall casing 200.

A screw 213 is secured to the disc or handle 212 and extends through opening 203*b* and is provided with a combined clamping member and pointer 214. This pointer overlaps the dial and may be clamped snugly thereto by means of a thumb nut 215. As previously stated, the dial 203 is rigidly secured to the hub 205. Therefore, by loosening the thumb nut 215, the cam disc 210 may be adjusted relative to the dial by moving the pointer to any graduation on the dial and clamping it in that adjusted position.

The graduations on the dial, as shown in Fig.

29, may include suitable symbols corresponding to various sizes of containers. Therefore, when the pointer and associated cam disc are adjusted to a predetermined symbol and the push button 194 operated, the reversible motor 17 will be operated in whatever direction required to horizontally adjust the machine to accommodate cases of a width corresponding to the symbol to which the pointer has been moved.

During the automatic adjustment of the machine, the selector transmission driven from the shaft 5 will move the dial and pointer clamp thereto until the pointer returns to the central neutral position shown in Fig. 29, carrying the cam disc and dial with it to a corresponding position with the selected dial symbol immediately under the pointer. By this arrangement, the particular size case to which the machine has been adjusted is always indicated immediately below the pointer at the neutral position shown.

The cam disc 210 is for the purpose of controlling a switch member 216 pivoted at 217 and having a roller 218 thereon engaging the edge of the cam disc 210. As previously stated, the cam disc 210 is cut away for one-half its circumference, as indicated at 211 and, when the roller 218 is on the large diameter portion of the disc as shown in Fig. 31, the motor will only operate in one direction when the control button 194 is operated. When the roller is in this position relative to the disc, the switch 216 maintains contact with a terminal 219 of the control circuit. When the cam disc is in a position whereby the roller 218 contacts the cut away portion 211 of the disc, the switch 216 will maintain contact with the reverse terminal 220 of the control circuit, whereby the motor may operate in the reverse direction. In other words, if the dial is set to any adjustment whereby the roller is on the raised portion of the cam and the control button is pressed, the cam disc will be rotated in the required direction until the switch is reversed by the roller 218 dropping onto the depressed portion 211 of the cam. The control circuit is then in reverse condition and the motor can only be operated again in either direction by adjusting the dial to a predetermined case dimension as indicated by a corresponding symbol on the dial.

The selector mechanism for the vertical adjustment may be substantially identical with that just described for the horizontal adjustment, except that it is driven from the pinion portion 202 of the shaft 15, and, on account of the relative positions of this shaft and the associated selector mechanism, idler gears such as the gear 209 and pinion 208 are not required and the gear 207a meshes directly with the pinion 202 of of the shaft. This horizontal selector mechanism is also provided with a switch 216a which is operated in identically the same manner as the switch just described which controls an identical motor control circuit such as shown in Fig. 32.

Fig. 32 is a wiring diagram illustrating the motor circuit and control circuit therefor. The motor circuit is shown in light lines and the control circuit is shown in heavy lines. The motor reversing switch comprises a solenoid operated 8-pole switch member A and a similar 8-pole switch member B which may be controlled by solenoids 221 and 222, respectively. The switch members are normally open as illustrated, whereby the motor is entirely disconnected from the power circuit, and it will be noted that, when the solenoid 221 is energized, the switch member A will move to the right, and the motor will be directly connected to the power circuit for operation in one direction. Also when the switch member B is operated by energizing the solenoid 222, it will move to the left and the power line connections to the motor will be reversed, as illustrated by the dotted line position of the switch member B.

With the control-circuit reversing switch 216 in the position shown in the diagram, the motor may be started by momentarily closing the "start" push button 194 which is normally open, and a control circuit will then be completed from one pole of the power line through a conductor 223, conductor 224, reversing switch 216, solenoid 222, and conductor 225 to the opposite pole of the power line. The solenoid 222 will, therefore, be energized to move the switch member B to the left to the dotted line position B' and close the power lines to the motor as indicated. Simultaneously, the right hand switch member contact B' will close the control circuit through the conductors 226 and 224, and the solenoid 222 will, therefore, remain energized to retain the switch member B in its left hand circuit-closing position until the control switch 216 is reversed by the cam disc. The switch members A and B may be spring-controlled for movement to their open position. Therefore, as soon as the solenoid 222 is deenergized by the reversing of the control switch 216, the switch member B will return to its full line position, thereby breaking the motor circuit and stopping the adjusting mechanism.

When the controlling switch 216 is in the reverse position from that illustrated in the wiring diagram, the solenoid 221 may be energized in the same manner to move the switch member A to connect the motor directly to the power line. The motor will then operate in a reverse direction from that previously described and move the upper frame member accordingly.

Automatic overload switches 227 are provided in the motor circuits and arranged automatically to break the control circuit in case of overload, so that the operation of the device will be stopped. Also the "stop" push button 195 may be operated at any time to stop the automatic operation.

It will be apparent from the above description that it is only necessary to adjust the selector pointer to a predetermined position corresponding to the width of the containers to be operated upon, and, as soon as the push button 194 is momentarily operated, the machine will automatically be adjusted to bring the parts into a relationship corresponding to the setting of the scale.

The selector for the vertical adjustment operates in the same manner as that just described and it is thought that a further detailed description is unnecessary.

Modifications may be made without departing from the spirit of the invention, and it is, therefore, desired that the invention be limited only by the prior art and the scope of the appended claims.

Having thus described this invention, what is claimed and desired to be secured by Letters Patent is:

1. In a container sealer having conveyor means, sealing means and flap handling means collectively capable of relative three-dimensional adjustment, indicator means settable to pre-select three-dimensional adjustment corresponding to any size carton within the limits of adjustment, and automatically operable means to consummate said adjustment in accordance with the indicator setting.

2. In a container sealer having conveyor means, sealing means and flap handling means collectively capable of relative three-dimensional adjustment corresponding to any size carton within the limits of said sealer, indicator means settable to pre-select a one-dimensional adjustment, a second indicator means settable to pre-select another one-dimensional adjustment, and automatic means for selectively consummating said adjustments.

3. In a container sealer having conveyor means, sealing means and flap handling means collectively capable of relative three-dimensional adjustment corresponding to any size carton within the limits of said sealer, indicator means settable to pre-select a one-dimensional adjustment, a second indicator means settable to pre-select another one-dimensional adjustment, a plurality of mechanisms controlled by the respective settings to consummate the respective adjustments, and means controlled by one of said mechanisms to consummate a third-dimensional adjustment.

4. In an automatic container sealer having conveyor means, sealing means and flap handling means collectively capable of relative three-dimensional adjustment, indicator means settable to pre-select three-dimensional adjustment corresponding to any size carton within the limits of adjustment, automatically operable means to consummate said adjustment in accordance with the indicator setting, and skip-gluing means controlled by said adjustment to vary the skip relative to the adjustment.

5. In an automatic container sealer having conveyor means, sealing means and flap handling means collectively capable of relative three-dimensional adjustment, indicator means settable to pre-select three-dimensional adjustment corresponding to any size carton within the limits of adjustment, automatically operable means to consummate said adjustment in accordance with the indicator setting, skip-gluing means controlled by said adjustment to vary the skip relative to the adjustment, and automatically adjustable means to apply strip gluing adjacent the edge of overlap carton flaps in accordance with the size of carton.

6. A double sealer comprising a base, laterally adjustable frames on said base, vertically adjustable frames on said laterally adjustable frames, conveyor members on all of said frames and adjustable therewith for conveying cartons of various sizes in accordance with adjustment, a sealing mechanism on each frame and adjustable therewith, indicator means settable to pre-selected adjustments corresponding to a predetermined size and shape of carton, and automatically operable means to consummate all of said adjustments in accordance with said pre-selection.

7. In an adjustable double sealer having a carton conveyor and a plurality of sealing means and associated driving mechanisms, indicator means settable to predetermine double sealer adjustment corresponding to various carton dimensions, and automatically operable means under the control of an operator for initiating and completing all conveying and sealing mechanism adjustments in accordance with the indicator setting.

8. An adjustable container sealer comprising conveyor means, indicator means manually adjustable to predetermine sealer adjustment corresponding to container dimensions, electrically operable means for automatically adjusting said conveyor means to accommodate containers corresponding to the indicator setting, and sealing means automatically adjustable with said conveyor means in accordance with the indicator setting.

9. In a carton handling machine having a carton conveyor, a plurality of interrelated adjustable mechanisms positioned relative to said conveyor to perform independent operations on each side flap of cartons of different dimensions, means to predetermine mechanism adjustment to correspond with carton dimensions within the adjustment limits, and automatic means under the control of an operator to correspondingly adjust said mechanisms.

10. In a carton handling machine having a carton conveyor, a plurality of continuously operable interrelated adjustable mechanisms positioned relative to said conveyor to perform independent operations on each side flap of cartons of different dimensions, means to predetermine mechanism adjustment to correspond with carton dimensions within the adjustment limits, and automatic means under the control of an operator to correspondingly adjust said mechanisms during continuous operation thereof.

11. In a carton handling machine having a conveyor adjustable for conveying cartons of different dimensions, a plurality of interrelated mechanisms adjustable simultaneously with said conveyor to perform independent operations on each side flap of cartons of dimensions corresponding to any adjustment, means to predetermine conveyor and mechanism adjustment, and means under the control of an operator to cause said simultaneous adjustment.

12. In a double sealer, the combination with adjustable upper and lower sealing mechanisms and means for conveying cartons past said mechanisms for sealing, of means for predetermining related lateral and vertical adjustment of said mechanisms in accordance with corresponding container dimensions, and automatic means for adjusting said mechanisms to correspond with said container dimensions.

13. In a container conveyor mechanism comprising conveyors for engaging the lower portions of containers, conveyors for engaging the upper portion of said containers, said conveyors being adjustable to accommodate containers of various dimensions, mechanism for automatically adjusting said conveyors, and control means comprising electrical motors for separately adjusting each conveyor, indicator means adjustable to conform with the dimensions of any container within the limits of said machine, and electrical means to cause an adjustment of said machine in accordance with the setting of said indicator.

14. A carton handling machine comprising a support, a first pair of frames mounted on said support for relative lateral adjustment, a second pair of frames vertically adjustable on said first frames, interrelated mechanisms mounted on all of said frames for performing related operations on cartons of various shapes and sizes according to said adjustments, positionable means to predetermine lateral and vertical adjustment for any shape or size of carton within the limits of the machine, and automatic means for causing said adjustment while retaining the co-operative relationship of said mechanisms.

15. In a container sealer, a plurality of spaced conveyors for engaging containers therebetween, a plurality of sealing means for sealing both ends of said containers, automatically operable means for relative adjustment of said conveyors and said sealing means, means settable to pre-select

container dimensions, and automatic means controlled by the setting of said last means to limit the automatic relative adjustment from any previous adjustment and in automatically selected directions to said preselected dimensions.

16. In a carton sealer adjustable for cartons of various dimensions, means for gluing the laterally extended side flaps of moving cartons of various sizes in accordance with adjustment, and means controlled by a moving carton to cause skip-gluing with the length of the glued areas relative to the size of the moving carton to which the sealer is adjusted.

17. In a double sealer adjustable for cartons of various dimensions, a separate means for gluing all four side flaps of a moving carton and means controlled by a moving carton to cause skip-gluing of each side flap with the glued areas relative to the dimensions of said moving carton.

18. In a double sealer adjustable for cartons of various dimensions, a separate means for gluing all four side flaps of a moving carton and means controlled by a moving carton to cause skip-gluing of each side flap with the glued areas relative to the length of said moving carton irrespective of the height.

19. In a carton sealer, a carton conveyer, a glue roll adapted to apply adhesive to a moving carton, and means controlled by the front of said carton to move said roll out of adhesive applying relation to said carton and controlled by the rear of said carton for returning said roll to adhesive applying position.

20. In an adjustable double sealer for cartons, a conveyor, an adhesive applying mechanism for each side flap, means for relative adjustment of said mechanisms to correspond with cartons of various dimensions, and automatically self-centering means adjacent the path of the cartons and controlled thereby to cause skip-gluing of all of said flaps.

21. In an adjustable carton handling machine, conveyor means laterally adjustable for cartons of various widths and a support for moving cartons, said support being automatically laterally adjustable simultaneously with said conveyor means and relative to the width of carton for which the conveyor means is adjusted.

22. In an adjustable sealer having laterally adjustable side frames for the passage of cartons of various widths therebetween, conveyor means for said carton, and a carton support between said frames, said support comprising a fixed central shelf and overlapping side leaves connected to said fixed shelf and to said side frames for overlapping extension therewith.

23. An adjustable sealer comprising laterally adjustable spaced conveyors for moving cartons therebetween, a longitudinal carton supporting track between said conveyors and adapted to support cartons with closed bottom end flaps and opening bottom side flaps, and means for simultaneously expanding said track and spacing said conveyors relative to the width of any carton within the adjustment limits.

24. In an adjustable sealer, a pair of relatively adjustable side members, a mechanism frame supported on said side members in self-centering relation therebetween, carton handling mechanism on said frame, and means controlled by adjustment of said side members to vary the carton handling relationship of said mechanism relative to the adjustment of said side members.

25. In an adjustable sealer, a pair of relatively adjustable side members, a mechanism frame supported on said side members in self-centering relation therebetween, carton handling mechanism on said frame, means controlled by adjustment of said side members to vary the carton handling relationship of said mechanism relative to the adjustment of said side members, said last means comprising a transverse drive shaft on one of said side members, a driven member rotatably mounted on said frame and slidable on said shaft, and a spiral groove and key connection between said shaft and said driven member.

26. In an adjustable sealer, the combination with laterally adjustable conveyors for moving cartons therebetween, a frame supported between said conveyors in self-centering relation thereto, sealing mechanism on said frame, a transmission between one of said conveyors and said mechanism, and means operatively associated with said transmission to synchronize the operation of said mechanism and said conveyors in accordance with the adjustment.

27. In an adjustable sealer, the combination with adjustable side frames and means for conveying cartons therebetween, a skip-gluing mechanism on at least one side frame, a skip-controlling mechanism supported in self-centering relation between said frames, and automatic means to vary the skip and glue area relationship on a carton relative to frame adjustment.

28. In an adjustable carton handling machine, an indicating adjustment control comprising a rotary indicator member settable in either direction from a fixed normal position to a position corresponding to a carton dimension and automatically operable means for adjusting said machine to said dimension from any previously adjusted position.

29. In an adjustable carton handling machine, an indicating adjustment control comprising a rotary indicator member settable in either direction from a fixed normal position to a position corresponding to a carton dimension and automatically operable means for adjusting said machine to said dimension from any previously adjusted position and simultaneously returning said indicator member to said normal position.

30. In an adjustable carton sealer, means for supporting cartons near the side edges and advancing said cartons with the bottom side flaps partially open, a pointed supporting table having the point disposed with relation to said supporting and advancing means so as to enter between the partially open side flaps and engage the closed bottom end flaps to support the carton and contents and leave the side flaps free, and means for simultaneously laterally expanding said table and said advancing means to correspond with a selected width of carton.

31. An adjustable carton handling machine comprising a pair of laterally spaced conveyors for moving cartons therebetween, a track between said conveyors for supporting cartons moved by said conveyors, a second pair of conveyors for supporting cartons with their bottom side flaps partially open and directing cartons onto said track and resting on the inner flaps and engaged by said first conveyors, and means for automatically and substantially simultaneously adjusting all of said conveyors and said track to accommodate a preselected width of carton.

32. A carton sealer comprising laterally adjustable conveyor frames, a central laterally expansible track for cartons, a horizontal endless conveyor on each frame and extending for-

wardly of said track, a conveyor on each frame in advance of said track for supporting said cartons on their outer bottom edges with the bottom side flaps sufficiently open to pass under said track, means for automatically spacing said cartons, and means under control of an operator for automatically adjusting all of said elements in accordance with the width of a selected carton.

33. A carton sealer comprising laterally adjustable conveyor frames, a central laterally expansible track for cartons, a horizontal endless conveyor on each frame and extending forwardly of said track, a conveyor on each frame in advance of said track for supporting said cartons on their outer bottom edges with the bottom side flaps sufficiently open to pass under said track, means for automatically spacing said cartons, synchronizing mechanism between at least one of said conveyors and said spacing means whereby said spacing is uniform irrespective of adjustment, and means under control of an operator for automatically adjusting all of said elements in accordance with the width of a selected carton.

34. In an automatically adjustable device having a plurality of interrelated mechanisms for operation on cartons, means for related adjustments of said mechanisms corresponding to preselected vertical dimensions of cartons including a first power driven shaft, means for related adjustments of said mechanisms corresponding to preselected lateral dimensions of cartons including a second power driven shaft, a movable indicator for each shaft and settable in either direction from zero to preselect adjustments corresponding to carton dimensions, and means cooperating between each shaft and its respective indicator to limit the adjustment and return the indicator to zero.

35. In an adjustable carton sealer, means for gluing the laterally extended flaps of moving cartons of any size within the limits of sealer adjustment, and means automatically adjustable in response to said sealer adjustment and controlled by a moving carton of any size corresponding to sealer adjustment to cause intermediate skip gluing in which the length of the skipped space is substantially equal to the length of the carton less the width thereof irrespective of the carton size.

36. In an adjustable carton sealer, means for gluing the laterally extended flaps of moving cartons of any size within the limits of sealer adjustment, and means automatically adjustable in response to said sealer adjustment and controlled by a moving carton of any size corresponding to sealer adjustment to cause intermediate skip gluing in which the length of the glued area on each end of each glued flap is equal to substantially one-half the width of the carton.

37. In an adjustable carton sealer, means for gluing the laterally extended flaps of moving cartons of any size within the limits of sealer adjustment, and means automatically adjustable in response to said sealer adjustment and controlled by a moving carton of any size corresponding to sealer adjustment to cause intermediate skip gluing in which the length of the skipped space is substantially equal to the length of the carton less the width thereof irrespective of the carton size, all of said elements being operatively related to enable automatic adjustment thereof during continuous operation of the machine.

JOHN L. FERGUSON.