Feb. 10, 1970 R. R. MOORE ET AL 3,494,321

HEAT-ACTUATED SAFETY INDICATOR FOR HOTPLATES AND THE LIKE

Filed June 17, 1968

Fig. 1.

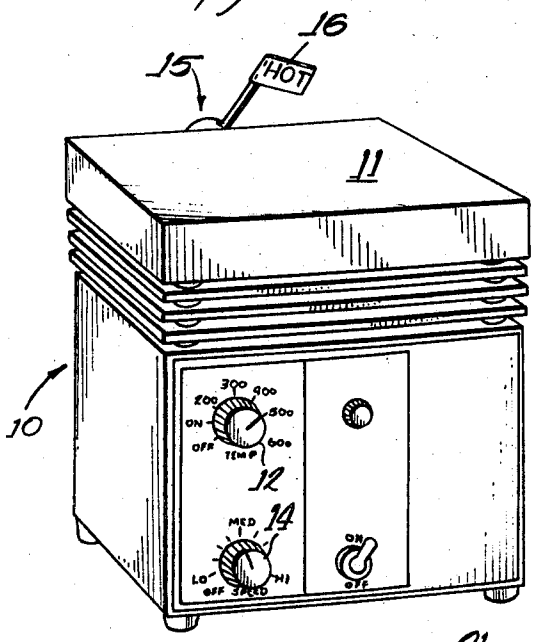

Fig. 2.

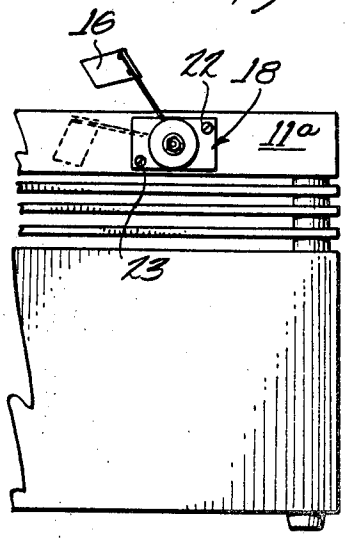

Fig. 3.

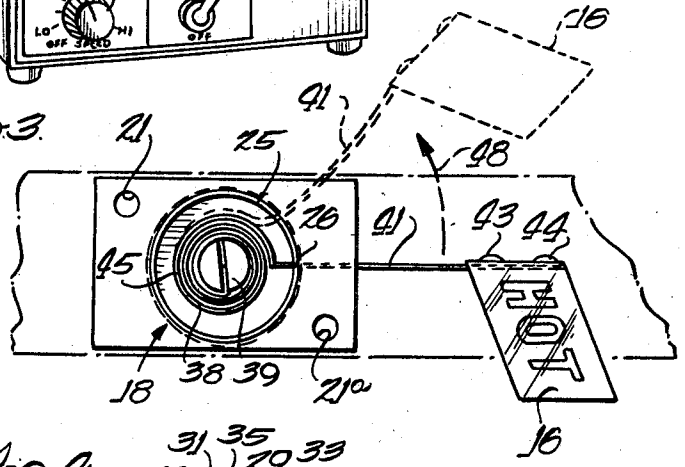

Fig. 4.

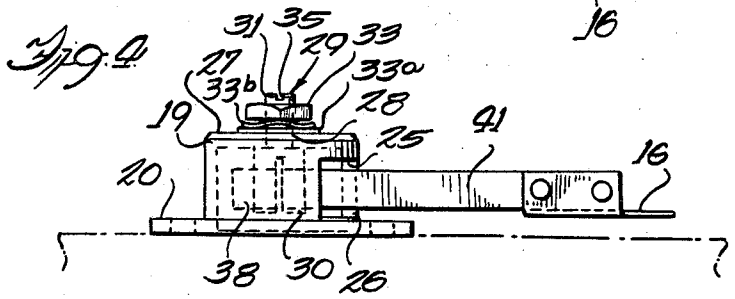

Fig. 5.

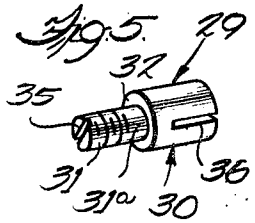

Inventors
Robert R. Moore
Vincent E. Fitzgerald

by: Dawson, Tilton, Fallon & Lungmus

Attys

United States Patent Office

3,494,321
Patented Feb. 10, 1970

3,494,321

HEAT-ACTUATED SAFETY INDICATOR FOR HOTPLATES AND THE LIKE

Robert R. Moore, Glenview, and Vincent E. Eitzen, Evanston, Ill., assignors to American Hospital Supply Corporation, Evanston, Ill., a corporation of Illinois

Filed June 17, 1968, Ser. No. 737,742
Int. Cl. G01k 1/02; G09f 9/00
U.S. Cl. 116—114.5 3 Claims

ABSTRACT OF THE DISCLOSURE

A hotplate is provided with a heat-actuated safety device for generating a visual signal when the hotplate is dangerously hot whether or not heat energy is being supplied to the hotplate. A flag is mounted on an extension of a bimetal which is located in a housing attached to a rear wall of the hotplate. When the hotplate is at room temperature, the flag is hidden behind it; and when it is hot, the flag is rotated into plain view above the support surface of the hotplate. The central portion of the bimetal is mounted on a shaft which extends through the housing and is frictionally coupled to it. A slot is provided on the exposed end of the shaft for initial adjustment or calibration of the bimetal at room temperature; and the adjustment is facilitated by a clutch-type mounting securing it to the housing.

The present invention relates to a visual indicator for signaling that the temperature of a heated plate is too high to touch by hand or unsafe to inflammable or low-flash-point material. More particularly, the present invention relates to a heat-actuated safety indicator which operates independent of the application of energy to the heating element.

Although it will be obvious to persons skilled in the art that it is not so limited, the safety indicator herein described is particularly suited for use with laboratory hotplates which typically are heated with electrical energy. In some electrically-energized hotplates, a visual indicator, such as a constant red light, is actuated during the period in which the hotplate is being heated. However, when the power is turned off, the indicator light is also turned off. Thus, should another person desire to use the hotplate, he is not warned that the hotplate is at too high a temperature to be touched.

The problem is somewhat more acute in the laboratory wherein the contents of a vessel are required to be subjected to a particular heat for a specified time, after which the vessel is removed and its contents are subjected to another process thus leaving an unattended hotplate at a high temperature.

Summary

The present invention provides a heat-actuated safety device which is mounted right on the hotplate. As used herein, the word "hotplate" does not refer to the overall heater apparatus; but rather, it refers specifically to the heat-conductive plate having a surface through which heat is transmitted from an energy source to an object or vessel and which also serves as a support surface for the vessel.

A cup-shaped housing has a peripheral flange about its open end for mounting directly to the hotplate. A shaft extends coaxial with the cylindrical sidewall of the housing and protrudes through a central aperture in the backwall thereof. The shaft is mounted on this backwall by means of a clutch type of coupling which permits rotation of the shaft within the housing to permit calibration, but secures the shaft in fixed angular position once the adjustment is made. A slot extends circumferentially about the housing sidewall for about 60°.

The exposed end of the central shaft is provided with a slot for receiving a screwdriver; and interior of the housing, a bimetal ribbon is mounted on the shaft. An extension arm of the bimetal ribbon extends through a slot in the cylindrical sidewall of the housing. At the distal end of the extension arm, an indicia-bearing flag is mounted.

The slot in the sidewall extends from the horizontal upwards to encompass an arc of about 60° therealong. An initial adjustment is made when the hotplate is at room temperature by rotating the shaft by means of a screwdriver in the exposed rear slot so that the extension arm lies just along the horizontal edge of the slot in the housing without any induced stress. As the temperature of the hotplate rises, the bimetal deflects to rotate the extension arm thereof upwardly and to raise the indicia-bearing flag above the supporting surface of the hotplate thereby generating a visual indication that the same is at a temperature unsafe for touching. Thus, even though power may be shut off and the operator leaves the hotplate, another person desiring to use it will have an immediate indication that it is hot since the flag does not return to its hidden position until the hotplate returns to near room temperature.

Other features and advantages of the present invention will be apparent to persons skilled in the art from the following detailed description of a preferred embodiment accompanied by the attached drawing wherein like reference numerals will refer to identical parts in the various views.

The drawing

FIG. 1 is a perspective view of a conventional hotplate equipped with the safety device of the present invention;

FIG. 2 is a rear elevation view of the inventive device;

FIG. 3 is a closeup front elevation view of the inventive device illustrating the range of positions of movement of the flag;

FIG. 4 is a top view of the device of FIG. 3; and

FIG. 5 is a perspective view of the shaft on which the bimetal ribbon is mounted.

Detailed description

Referring first to FIG. 1, there is seen a conventional laboratory heater generally designated **10**; and it is equipped with an electrical heater element (not shown) which may be located either within or beneath a hotplate **11**. The temperature of the hotplate **11** is automatically regulated according to known techniques; and it is set by means of a front dial **12**. The hotplate **11** serves not only as a heat-conductive surface for transmitting heat from the heater element to the vessel or container of the substance being heated, but it also serves as a support surface for that vessel.

For laboratory use, the heater **10** may also be equipped with a magnetic stirrer, which is also conventional and therefore not shown. The speed of the stirrer may be set by means of a dial **14**; and a Teflon-coated magnetic stirrer may be provided for insertion to the liquid in a container supported by the hotplate **11**.

The inventive safety device is generally designated by the reference numeral **15** in FIG. 1; and as illustrated

there, an indicia-bearing flag **16** is in a raised or observable condition. The flap **16** preferably bears the indicia "HOT"; and it is made of anodized aluminum and colored bright red for signaling danger. The actual indicia "HOT" may be etched into the aluminum or painted in white or the red background.

Turning now to FIG. 2–4, the heat-actuated safety device includes an integral housing generally designated **18**. The housing **18** includes a cylindrical sidewall **19** having a peripheral mounting flange **20**, and a backplate **27**. The flange **20** is provided with first and second apertures **21** and **21***a* (FIG. 3) for receiving screws **22** and **23** respectively (FIG. 2) which are threadably received in a rear vertical surface **11***a* of the hotplate **11**.

The entire housing **18**, as mentioned, is integral, and is of a material having good heat-conductive properties; we have found aluminum to give satisfactory results. The mounting flange **20** also provides a good heat-conductive surface in engagement with the hotplate for maintaining the entire housing at nearly the same temperature as the hotplate. A slot **25** (FIG. 4) is formed in the cylindrical sidewall **19** of the housing **18**; and it extends from a horizontal edge **26** upwardly about 60° around the cylindrical sidewall **19**. The backplate **27** together with the cylindrical sidewall **19** form a cup-shaped container for housing a bimetal presently to be described.

The backplate **27** defines a central aperture **28** for receiving a shaft generally designated **29** and seen in perspective in FIG. 5. The shaft **29** contains an enlarged head portion **30** and a partially-threaded shank **31** which fits through the aperture **28**. A shoulder **32** extends between the shank **31** and the head portion **30** of the shaft **29**; and it engages the interior surface of the backplate **27** when attached thereto (see FIG. 4). The aperture **28** of the backplate **27** is large enough to receive the shank **31** of the shaft **29**; however, it has a smaller diameter than that of the head portion **30** of the shaft **29**. The shank **31** is provided with a machine screw thread which terminates short of the shoulder **32** to provide a smooth bearing surface **31***a* for engaging the wall of the aperture **28** and for permitting rotation of the shaft **29** as presently described.

The shaft **29** is secured to the housing by means of a nut **33** threadably received on the threaded portion **31** of the shaft. A flat washer **33***a* and a spring washer **33***b* are interposed between the nut **33** and the backplate **27** (FIG. 4). When the nut **33** is threaded into the portion **31** of shaft **29**, the flat washer **33***a* and the shoulder **32** frictionally engage the backplate **27** of the housing **18** with a preset force which must be overcome before the shaft **29** can be rotated relative to the housing. However, once it is rotated, the shaft **29** and its securing nut **33** rotate together by virtue of the clutch action provided by the spring washer **33***b*. This is considered an important aspect of the present invention in that it permits initial adjustment or calibration of the bimetal described in greater detail below.

The end of the threaded portion **31** of the shaft **29** is provided with a slot **35** for receiving a screwdriver or other blade in adjusting the angular position of the bimetal. The head portion **30** of the shaft **29** is provided with a central slot **36**.

A bimetal ribbon **38**, preferably in the foam of a spiral, is mounted about the head portion **30** of the shaft **29** within the housing **18**; and it is secured to the shaft **29** by means of a transversely-bent end portion **39** which is received in the slot **36** of the head **30** and held there by friction.

As seen in FIG. 3, which is a front view, the ribbon **38** is wound clockwise about the shaft **29**; and as is conventional, it is comprised of two metals having different thermal coefficients of expansion and placed side by side throughout its length. The bimetal **38** is also provided at its free end with an extension arm **41** which protrudes radially outward of the shaft **29** and projects through the circumferential slot **25** in the cylindrical sidewall **19** of the housing **18**. At the distal end of the extension arm **41**, the indicia-bearing flag **16** is mounted by means of rivets **43** and **44**.

For the arrangement shown, the metal on the outside of the bimetal winding, as indicated by reference numeral **45**, has a smaller thermal coefficient of expansion than does the metal on the interior. Thus, as the ribbon is heated, the interior metal will unwind the spiral and rotate the extension arm **41** in a counterclockwise direction as indicated by the dashed arrow **48** in FIG. 3 thereby raising the flag **16** to the dashed portion illustrated in FIG. 3. By thus rotating the arm **41** in a counterclockwise direction, the flag is lifted above the supporting surface of the hotplate **11** where it will be clearly visible from the front.

It is noted that the flag **16** will remain in such raised condition (thereby displaying the warning indicia on it) until the temperature of the hotplate is lowered to near room temperature. As illustrated in FIG. 3 in dotted line, additional lifting is supplied to the flag **16** since the entire arm **41** is also comprised of the bimetal arrangement; and when heated, the arm **41** will curve in the direction of rotation of the flag which supplies a cumulative displacement thereof together with the deflection caused by the unwinding of the coil.

In order to adjust the safety device for proper operation, a screwdriver is inserted in the exposed rear slot **35** on the threaded portion **31** of the shaft **29**; and the shaft **29** is thus rotated until the extension arm **41** is raised above the horizontal edge **26** of the slot **25** thereby indicating that all stress had been removed from the bimetal **38**. Thence, the arm **41** is rotated slightly clockwise (when viewed in FIG. 3) until the arm **41** barely engages the horizontal edge **26** of the slot **25**. This operation is performed with the nut **33** in its tightened condition; and it is facilitated by the previously-described clutch action provided by the spring washer **33***b*. Hence, once the adjustment is made, the shaft and the bimetal remain in frictional coupling with the housing; and no further adjustment is required for proper operation.

It will be apparent that the motion of the arm could be calibrated to indicate an analog of temperature in which case the advantageous adjustment arrangement would provide a good means of initial calibration.

Having thus described in detail a preferred embodiment of the inventive safety device, it will be obvious to persons skilled in the art that certain modifications may be made to the structure disclosed by way of example, and that equivalent materials may be substituted. It is our intention that all such modifications and substitutions be covered.

We claim:

1. In combination with a hotplate, a heat-actuated safety device comprising: a heat-conductive housing having a peripheral mounting flange secured in heat-conductive relation to said hotplate, said housing defining a slot; a shaft mounted in said housing; a bimetal ribbon mounted on said shaft and having an arm extending through said slot and moving between a first position wherein said arm lies generally behind said hotplate when said ribbon is at room temperature and a second position wherein said arm extends above said hotplate when said hotplate is hot; and an indicia-bearing flag mounted on the distal end of said arm, whereby as the temperature of said bimetal rises, the same will unwind thereby raising the flag above the supporting surface of said hotplate and displaying the same.

2. The structure of claim **1** wherein said hotplate defines a horizontal supporting surface and wherein said housing includes a cylindrical sidewall, a backplate integral with said sidewall and said peripheral mounting flange secured to said hotplate, said slot extending upwardly therefrom about 60°; said arm of said bimetal extending generally horizontally through said slot in said

first position when said hotplate is at room temperature.

3. The structure of claim 2 wherein said backplate of said housing defines a central aperture for receiving said shaft, said shaft including an expanded head portion defining a shoulder engaging the interior surface of said backplate, said head further defining a reduced threaded portion extending through said aperture and defining a slot exterior of said housing; said device further including a nut threaded onto said threaded portion of said shaft; and a spring washer interposed between said nut and said backplate whereby a blade may be inserted into the exposed slot of said shaft for adjusting the angular position of said extension arm at room temperature to calibrate the same while a clutching action provided by said washer prevents relative movement between said securing nut and said shaft during said adjustment.

References Cited

UNITED STATES PATENTS

1,622,545	3/1927	Schellenberger	73—363.5 XR
2,750,916	6/1956	Hanington	116—102
3,163,043	12/1964	Snider	73—363.5
3,301,060	1/1967	Kenmotsu	73—343

LOUIS R. PRINCE, Primary Examiner

FREDERICK SHOON, Assistant Examiner

U.S. Cl. X.R.

73—363.5; 116—132