(12) INTERNATIONAL APPLICATION PUBLISHED UNDER THE PATENT COOPERATION TREATY (PCT)

(19) World Intellectual Property Organization
International Bureau

(43) International Publication Date
24 May 2018 (24.05.2018)

WIPO | PCT

(10) International Publication Number
WO 2018/091629 A1

(51) International Patent Classification:
F16C 17/04 (2006.01) *F02B 39/00* (2006.01)
F16C 33/10 (2006.01) *F01D 25/16* (2006.01)
F16C 17/10 (2006.01)

(21) International Application Number:
PCT/EP2017/079541

(22) International Filing Date:
17 November 2017 (17.11.2017)

(25) Filing Language: English

(26) Publication Language: English

(30) Priority Data:
10 2016 222 625.8
17 November 2016 (17.11.2016) DE

(71) Applicants: **TURBO ENERGY PRIVATE LIMITED** [IN/IN]; Old Mahabalipuram Road, Paiyanur Tamil Nadu 603104 (IN). **TURBO ENERGY GERMANY GMBH** [DE/DE]; Rudolf-Diesel-Strasse 40-44, 68169 Mannheim (DE).

(72) Inventors: **KÖRNER, Stefan**; Bluecherstraße 8, 69226 Nussloch (DE). **SMILEK, Lukas**; Na výsluni 395, 75501 Vsetin (CZ). **SUBRAMANI, D.**; MIG-6235, Brindavan TNHB, Ambattur Scheme, Phase 1 & 2, Ayappakkam, Chennai 600077 (IN). **ALAGARSAMY, V.**; Orchid 8, Majestic Orchard, 1, Jaswant Nagar, Mogappair West, Chennai 600037 (IN).

(74) Agent: **DR. WEITZEL & PARTNER**; Friedenstraße 10, 89522 Heidenheim (DE).

(81) Designated States *(unless otherwise indicated, for every kind of national protection available)*: AE, AG, AL, AM, AO, AT, AU, AZ, BA, BB, BG, BH, BN, BR, BW, BY, BZ, CA, CH, CL, CN, CO, CR, CU, CZ, DE, DJ, DK, DM, DO, DZ, EC, EE, EG, ES, FI, GB, GD, GE, GH, GM, GT, HN, HR, HU, ID, IL, IN, IR, IS, JO, JP, KE, KG, KH, KN, KP, KR, KW, KZ, LA, LC, LK, LR, LS, LU, LY, MA, MD, ME, MG, MK, MN, MW, MX, MY, MZ, NA, NG, NI, NO, NZ, OM, PA, PE, PG, PH, PL, PT, QA, RO, RS, RU, RW, SA, SC, SD, SE, SG, SK, SL, SM, ST, SV, SY, TH, TJ, TM, TN, TR, TT, TZ, UA, UG, US, UZ, VC, VN, ZA, ZM, ZW.

(84) Designated States *(unless otherwise indicated, for every kind of regional protection available)*: ARIPO (BW, GH, GM, KE, LR, LS, MW, MZ, NA, RW, SD, SL, ST, SZ, TZ, UG, ZM, ZW), Eurasian (AM, AZ, BY, KG, KZ, RU, TJ, TM), European (AL, AT, BE, BG, CH, CY, CZ, DE, DK, EE, ES, FI, FR, GB, GR, HR, HU, IE, IS, IT, LT, LU, LV,

(54) Title: JOURNAL THRUST BEARING BUSH FOR SUPPORTING THE SHAFT OF AN EXHAUST TURBOCHARGER

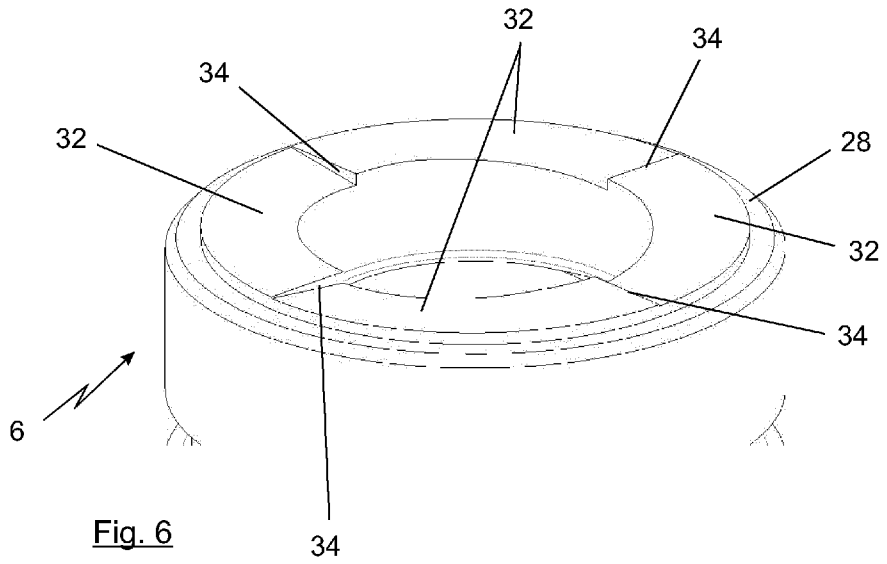

Fig. 6

(57) Abstract: A bearing bush (6) for a shaft of a turbo charger has a ring-shaped axial bearing surface (30) comprising a number of wedge surfaces (32) following each other in circumferential direction. The wedge surfaces (32) start in one plane vertical to the central axis of the bearing bush and decrease from that plane in axial direction along the circumferential direction, wherein each of the wedge surfaces (32) ends on the edge of the adjacent wedge surface (32) with a step (34) in axial direction below the plane. In an alternative embodiment the wedge surfaces are in an alternating arrangement with thrust surfaces. In that case a step is arranged between a wedge surface and an edge of the adjacent thrust surface.

[Continued on next page]

WO 2018/091629 A1

MC, MK, MT, NL, NO, PL, PT, RO, RS, SE, SI, SK, SM, TR), OAPI (BF, BJ, CF, CG, CI, CM, GA, GN, GQ, GW, KM, ML, MR, NE, SN, TD, TG).

Published:

— *with international search report (Art. 21(3))*

— *before the expiration of the time limit for amending the claims and to be republished in the event of receipt of amendments (Rule 48.2(h))*

JOURNAL THRUST BEARING BUSH FOR SUPPORTING THE SHAFT OF AN EXHAUST TURBOCHARGER

The invention relates to a bearing bush for a shaft of a turbo charger according to the type further defined in the preamble of claim 1. The invention further relates to a turbo charger with such a bearing bush.

Turbo chargers are known from the general prior art. They typically comprise a continuing shaft on the one end of which a turbine is mounted and on the other end of which at least one compressor wheel is mounted. Bearing bushes have long been known for supporting the shaft in the housing of the turbo charger, which comprise axial bearing surfaces or radial bearing surfaces, in particular. Reference can be made in an exemplary manner to a bearing bush of this type in the disclosure of US 4,240,678 A.

A deciding factor for such bearing bushes is its bearing function as an axial bearing on the one hand, and in particular as a radial bearing for the shaft of the turbo charger typically running very fast with several 1,000 rpm. Such bushes can be designed in one part. Reference can be made in an exemplary manner to the structure in US 6,017,184 A to that end. EP 1 998 009 B1 shows a structure, in which a divided bush is formed, for example. Said bush divided in two parts essentially has a similar structure, both of the radial bearing surfaces inside the two bushes as well as of the two axial bearing surfaces at in each case one front face of the bush.

US 9,140,185 B2 shows beneath the main object of the patent dealing with an asymmetric opening to achieve a locating pin to fix the bearing bush in the housing of a turbo charger further an axial bearing surface. This axial bearing surface is shown e.g. in figure 2. It consists of thrust surfaces and wedge surfaces following one another in circumferential direction. Beneath those are additional grooves in radial direction ascending from the inner diameter to the outer diameter with two different shapes. The shape of the whole axial bearing

surface is very complex and difficult to manufacture. Furthermore, there are a lot of edges producing a relatively high friction.

The international patent application WO 2014/055255 A1 is showing a journal bearing with an axial bearing surface. The axial bearing surface consists of one planar surface with thrust producing means at the inner diameter of the ring-shaped surface. Those thrust providing means do not extend to the outer diameter of the surface. They were used for providing oil as a lubricant to the planar surface. The problem with this idea is the relatively big planar surface which increases the friction. Furthermore, there are no means for distributing the oil across this planar surface. This will lead to a minimal amount of oil needed on the one hand but will increase the friction furthermore on the other hand.

It is the object of the invention to provide an improved bearing bush for the shaft of a turbo charger which allows a good thrust capacity together with minimal friction and acceptable oil consumption. It is furthermore the object of the invention to provide a turbo charger with such a bearing bush.

The object is achieved by a bearing bush with the features in claim 1. Furthermore, the object is achieved by a turbo charger including such a bearing bush.

The bearing bush according to the invention comprises at its axial bearing surface an arrangement of a number of wedge surfaces following each other in circumferential direction. Each of the wedge surfaces starts in one plane vertical to the central axis of the bearing bush. It decreases from that plane in axial direction along the circumferential direction, wherein each of the wedge surfaces ends on an edge of the adjacent wedge surface with a step in axial direction below the plane. This complex three dimensional surface, allows a design with a minimal number of edges. Therefore as much thrust as possible

can be provided with minimal distribution of the flow of lubricant on and in the region of the axial bearing surface. A good bearing capacity together with a low friction is therefore achieved.

In a further improved embodiment of the invention the axial bearing surface comprises an alternating arrangement of wedge surfaces and thrust surfaces with respect to the circumferential direction. The thrust surfaces are co-planar in one plane. This plane is vertical to a central axis of the bearing bush. Each of the wedge surfaces is starting adjacent to one edge of the thrust surfaces in the same plane. It then decreases in axial direction along the circumferential direction from that plane wherein the wedge surfaces end on the other edge of the next thrust surface in circumferential direction with a step in axial direction below the planar thrust surface.

According to a further improved development of the bearing bush the height of the step at the inner diameter of the axial bearing surface is bigger than on the outer diameter of the axial bearing surface. In a preferred embodiment the height at the inner diameter is at least three times, preferably more than five times higher than the height of the step at the outer diameter. This allows a good supply of oil as a lubricant from the inside of the bearing bush to the wedge surfaces. On the other hand it decreases the amount of lubricant flowing to the outer diameter and be spilled of by the rotating elements. Therefore, a good lubrication on the one hand and a reduction in the amount of lubricant needed on the other hand is provided.

To achieve this special improvement the wedge surface has a continuously curved shape. There are no edges in the wedge surface. The transition from the planar thrust surface into the wedge surface might be unsteady. The rest of the shape of the wedge surface is a three dimensional steady or rather continuously curved shape. The curve is preferably steady in radial as well as

in circumferential direction. This allows a minimum resistance for the lubricant and enables good thrust producing capacities.

According to a further preferred embodiment of the bearing bush the axial bearing surface comprises at least three, preferably four, thrust surfaces. With such a relatively small number of thrust surfaces the friction between the axial bearing surface and its counterpart is reduced. Although in a preferred embodiment of this idea the overall area of the thrust surfaces is smaller than those of the wedge surfaces the carrying capacity of the axial bearing surface might be improved.

According to a further embodiment of the idea the relation between the thrust surfaces on the one hand and the wedge surfaces on the other hand might be about 1:2, or smaller. This helps to reduce the friction on the one hand and enables through the special design of the wedge surfaces an acceptable carrying capacity of the axial bearing surface on the other hand.

Furthermore in an improved embodiment the edges between the thrust surfaces and the wedge surfaces run in radial direction. The preferably ring shaped area of the axial bearing surface is therefore divided in radial segments of the wedge surfaces and the thrust surfaces following each another in the alternating arrangement.

Although it might be possible that a bearing bush has only one such axial bearing surface according to an improved embodiment of the idea the bearing bush is characterized by two axial bearing surfaces one of each of its two axial end faces.

According to the special design of the wedge surfaces it is useful to have a distribution of lubricant from the inside of the bearing bush to the wedge surfaces. According to this idea the bearing bush comprises oil distributing

means which are positioned on the inner circumferential surface of the bearing bush.

According to a further improved embodiment of this idea the bearing bush comprises at least one radial bearing surface on its inner surface comprising a groove for oil distribution. Such a groove in at least one radial bearing surface on the inner circumference of the bearing bush allows oil to be distributed in axial direction from the center of the bearing bush through the radial bearing surface to the region of the axial bearing surface. Therefore the lubrication of the radial bearing surface as well as the axial bearing surface becomes possible..

According to a further preferred development the groove for oil distribution comprised in the radial bearing surface is a helical groove. This helical groove allows, if it is positioned in the needed rotating direction a transportation of oil from the center of the bearing bush in axial direction to the axial bearing surface.

A turbo charger according to the invention includes at least one compressor and a turbine on a common shaft. The turbo charger comprises a housing with a central opening for receiving the shaft in at least one bearing bush. This bearing bush is constructed according to one of the above mentioned embodiments with the axial bearing surface comprising wedge surfaces according to the above mentioned embodiments. Such a turbo charger allows a minimal friction in its axial bearings as well as good thrust capacities with a low consumption of lubricant or rather oil.

Further advantageous configurations and further developments of the bearing bush and of the turbo charger further result from the exemplary embodiment, which is described in more detail below with reference to the figures.

The figures show in:

Figure 1 a section through a part of a turbo charger according to the invention;

Figure 2 a sectional illustration of the bearing bush inserted in the housing of the turbo charger;

Figure 3 a three-dimensional view of a bearing bush according to the invention;

Figure 4 a top view on an embodiment of an axial bearing surface according to one embodiment of the invention;

Figure 5 a three dimensional view on the axial bearing surface in a first embodiment according to the invention; and

Figure 6 a three dimensional view on the axial bearing surface in a further embodiment according to the invention.

In the illustration of figure 1, it can be discerned a detail of a turbo charger 1 as it can in particular be used as an exhaust gas turbo charger. Here, the core of the turbo charger 1 is formed by a turbine 2 and a compressor 3 on a common shaft 4 with said turbine 2, on the other end of the shaft 4. The turbo charger 1 per se consists of a central housing 5, in which a bearing bush 6 is arranged for supporting the shaft 4. The central housing 5 is then completed by an attached compressor housing 7 in the area of the compressor 3 and by a turbine housing 8 in the area of the turbine 2. For the following invention, now the central area of the housing 5 as well as the bearing bush 6 are of interest for radially supporting the shaft 4.

In the enlarged detail of figure 2 it can again be discerned the central part of the housing 5 as well as the bearing bush 6, this time without the shaft 4. The bearing bush 6 is located in a central opening 9 of the housing 5. The diameter of said central opening 9 is constant over the entire axial length here, wherein the axial direction A, as it is indicated in the illustration of figure 2, is defined along a central axis 10, which is the rotational axis of the shaft 4 and the turbine 2 as well as of the compressor 3. The direction R radially running thereto stands perpendicular on said central axis 10, respectively.

Upon assembly, the bearing bush 6 is slid or pushed into the central opening 9 with little clearance, e.g. prior to the shaft 4 being slid into the bearing bush 6 or eventually even as soon as it is already pushed onto the shaft 4. After pushing into the central opening 9, a bore 11 which is also referred to as oil drain bore 11, thus comes to a rest over a stepped bore 12 in the housing 5 such that a pin 13, by means of being screwed into a thread of the stepped bore 12, comes to rest with its front end within the oil drain bore 11. By means of the pin 13, the bearing bush 6 is fastened with clearance in axial direction A as well as in radial direction r. Therefore, the bearing bush 6 can still move within the central opening 9, but can, however, no longer move out of the central bore 9.

The bearing bush 6 per se has an outer surface 14 as well as an inner surface 15. The outer surface 14 is analogous to the configuration of the central opening 9 outside the grooves 18, 19, 20, which it comprises and configures with the exception of at least one transition 28 toward the front faces with the same diameter d. This can even be better discerned in figure 3, a three-dimensional illustration of the bearing bush 6. The housing 5, as it can in turn be seen from figure 2, furthermore comprises an oil supply channel 16 on the side opposing the stepped bore 12, via which lubricating oil, according to the arrow designated with 17 in the illustration of figure 1, is supplied to the bearing bush 6. The lubricating oil then centrally reaches the area of bearing bush 6. On the one hand, there is located a groove 18. This groove 18 running in the axial direction A, also referred

to longitudinal groove 18, extends over almost the entire length of the bearing bush 6. Parts of the outer surface 14 are merely located in the axial end areas which are not penetrated by the longitudinal groove 18, so that the longitudinal groove 18 does not open into the area of the front faces. Besides said axially-running longitudinal groove 18, naturally a groove that only runs in an axial direction could be conceivable. Such a groove, for example, could run oblique, V-shaped, zigzag, or also helically around the bearing bush 6. However, essentially the same applies to this groove which is explained here accordingly by way of example of the axial longitudinal groove 18.

In the mounted state of bearing bush 6, there is furthermore a discernable circumferential central groove 19 is located in the area of the oil supply channel 16, which is configured as an annular groove around the circumference of the bearing bush 6, in the illustrations of figure 3. In the area in which the longitudinal groove 18 running in an axial direction A ends, there is a further annular groove also located on each end, which are denoted with 20 in the illustrations of the figures, respectively. The end of the bearing bush 6 is formed by two axial bearing surfaces 21 on the front sides of the bearing bush 6.

In the illustration of figure 2, in particular the longitudinal groove 18 as well as the two annular grooves 20 can be discerned. From these two annular grooves 20, in each case two radial bores 22 arranged opposite one another lead to the area of the inner surface 15 from the outer surface 14 or the annular grooves 20, respectively, as it can be well discerned particularly from the illustration of figure 2. In this area, the internal diameter of the bearing bush 6 is smaller, so that radial bearing surfaces 23 suitable for radially supporting the shaft 4 on shaft sections suitable thereto, are formed here, as can be seen in the illustration of figure 1.

Now, via the oil supply channel 16, oil enters the area of the longitudinal groove 18 as well as the central groove 19 as a lubricant, according to the arrow designated with 17 in figure 1. Part of the oil flows through the longitudinal groove

18 to the two annular grooves 20 and distributes around the circumference of the bearing bush 6. This oil then flows through the radial bores 22 into the area of the radial bearing surfaces 23 and there serves for the lubrication of the radial bearing surfaces 23. Here, the number of radial bores 22 in the area of each of the radial bearing surfaces 23 is ideally evenly distributed over the circumference of the bearing bush 6 or the annular groove 20 in order to ensure a uniform lubrication. Advantageously, only two radial bores 22 are provided, just as in the structure according to the figures. This ensures a sufficient lubrication of the radial bearing surfaces 23. On the other hand, by the comparatively small number of only two radial bores 22 per radial bearing surface 23, the consumption of lubrication oil is limited, what constitutes a considerable advantage.

It can further be discerned from the illustration of figure 2, that in each case a helical groove 29 is arranged in each of the two radial bearing surfaces 23. This helical groove winds along the entire radial bearing surface 23 and is configured in opposite rotational direction, as in the other axial bearing surfaces 23, in the one radial bearing surface 23, as can be taken from the illustration of figure 2. The lubricating oil, which has reached the area of the radial bearing surfaces 23 via the longitudinal groove 18 and the radial bores 22 is now distributed over the entire radial bearing surfaces 23 by this two helical grooves 29. This ensures a comparatively good lubrication over the entire surface of the radial bearing surfaces 23. At the same time, a direct drain, as it would be the case on longitudinal grooves in the radial bearing surfaces, for example, is prevented. However, it deliberately comes to a certain conveying effect by the rotational direction of the helical grooves 29, due to the shaft 4 rotating relative to the radial bearing surfaces 23. This achieves a conveying effect of the oil outwardly in axial direction, respectively, i.e. in the direction of the axial bearing surfaces 21. This ensures a safe and reliable lubrication of the axial bearing surfaces 21 during operation.

Despite the helical grooves 29, a small amount of oil from the radial bearing surfaces 23 reaches inwards into the region of the bearing bushes 6 between the two radial bearing surfaces 23. Said amount of oil may then flow out through the oil drain opening 11 and the pin 13, which has a longitudinally-running through bore 24, as this can be taken from figures 1 and 2. A further part flows outwardly through the radial bearing surfaces 23 and enters the area of the axial bearing surfaces 21 on the front faces of the bearing bush 6. There, it lubricates the axial bearing surfaces 21 and then flows outwardly, as this can be seen in the illustration figure 3. It accumulates in an annular space 25 around the shaft 4 and flows, as this is indicated by the arrows denoted with 26, together with the oil passing through the through bore 24, via a drain opening 27 out of the housing 5. A passage of oil towards the turbine 2 or the compressor 3, respectively, is prevented in a manner known per se by seals, in this case labyrinth seals.

Besides this oil, serving for the lubrication of the radial bearing surfaces 23 and the axial bearing surfaces 21, a part of the oil also flows out through the annular central groove 19 along a gap between the outer surface 14 of the bearing bush 6 and the surface of the central opening 9. By said gap, the oil will also pass through the outside in axial direction a, i.e. in direction to the axial bearing surfaces 21, respectively. This passing of the oil through the comparatively narrow gap between the outer surface 14 and the surface of the central opening 9 serves on the one hand for the lubrication and in particular as a squeeze oil damper, which accordingly dampens the eventually occurring swash movement of the bearing bush 6, as far as said bush has an axial clearance in the central opening 9 and thus ensures a calm and reliable operation of the shaft 4 of the turbo charger 1. This way, too, the oil of the squeeze oil damper which also continues to flow to the outside and effects a damping there, too, flows in the area of the axial bearing surfaces 21, thereby lubricating them. Excessive oil then passes through the circumferential annular spaces 25 and the indicated arrows 26, as can be discerned in figure 1, via the drain opening 27 out of the housing 5.

Furthermore in figure 3 on one of the axial end faces 21 of the bearing bush 6 an axial bearing surface 30 is shown. The axial bearing surface 30 has a ring shaped contour and consists of four thrust surfaces 31 and four wedge surfaces 32. The thrust surfaces 31 and the wedge surfaces 32 are following each other in an alternating way around the circumference of the ring shaped axial bearing surface 30. The thrust surfaces 31 are co-planar in one plane in which is vertical orientation to the central axis 10 of the bearing bush 6. The lubricant or oil transported by the helical grooves 29 in the radial bearing surfaces 23 towards the end faces 21 of the bearing bush 6 distributes on the inner diameter d of the axial bearing surface 30, which is shown in figure 4. The area of the co-planar thrust surfaces 31 is smaller than the area of the wedge surfaces 32, which also can be seen very good in the top view of figure 4. The area of the thrust surfaces 31 will be less than 50%, especially less than 33% of the overall area of the axial bearing surface 30. In the special embodiment shown in figure 4 the area of the thrust surfaces 31 is about 25% wherein the area of the wedge surfaces 32 will be about 75% both of the overall area of the axial bearing surface 30..

In a further enlarged view of figure 5 the constructing principal of the wedge surfaces 32 can be seen. Each of the wedge surfaces 32 starts in the same plane as the co-planar thrust surfaces 31. In the illustration of figure 5 this is always on a radial edge 33 of the thrust surface 31 in clockwise direction. Starting at this edge 33 the wedge surface 32 decreases in axial direction A from this plane vertical to the central axis 10. It decreases on the outer diameter of the ring-shaped axial bearing surface 30 only by a small amount. The amount it decreases on the inner diameter d of the ring-shaped axial bearing surface 30 is higher. This leads to a step 34 on the circumferential end of the wedge surface 32 in clockwise direction. This step 34 which especially extends in radial direction R is a further edge 35 of each of the thrust surfaces 31.

During the use of the bearing bush 6 in the turbo charger 1 the axial bearing surface 30 as shown in figures 5 and 6 is rotating in anticlockwise direction against a counter surface (not shown) which might be e.g. planar. This rotation of the bearing bush 6 in anticlockwise direction requires an axial bearing surface 30 on the other face end 21 of the bearing bush 6 which is mirrored with respect to the axial bearing surface 30 shown in the figures.

As can be seen from the view in figure 5 a height H at the inner diameter d of the step 34 is much higher than a height h on its outer diameter D. This leads to a three dimensionally curved shape of the wedge surface 32 which is continuously or rather steady, which means that there are no further edges in the shape of the wedge surface 32.

The way the wedge surface 32 is dimensioned with respect to the co-planar thrust surfaces is that on the inner diameter d the step 34 is much higher than on the outer diameter D. The height H and the inner diameter is therefore about 3 to 8 times higher than the height h on the outer diameter D. In the embodiment shown in figure 5 the height h is about 20 to 60 µm, the height H 150 to 300 µm. This complex three dimensional shape of the wedge surface 32 allows a good lubrication with a minimal friction and a high thrust capacity on the one hand and allows to reduce the consumption of oil or lubricant needed on the other hand.

Going on in clockwise direction the thrust surface 31 has the further radial edge 33 which is the edge where the adjacent next wedge surface 32 starts. The combination of the thrust surface 31, the wedge surface 32 and the step 34 therefore is positioned around the circumference of the ring-shaped axial bearing surface 30 four times in the preferred embodiment and all of their four thrust surfaces 31 as well as wedge surfaces 32 are shaped in the same size to achieve an even fragmentation of the whole area of the axial bearing surface

30. Such an axial bearing surface 30 is positioned at both end faces 21 illustrated in figure 2.

The embodiment shown in figure 6 is designed without the thrust surfaces 31. Four wedge surfaces 32 are following each other in circumferential direction. The step 34 is therefore arranged between the wedge surfaces 32 itself. Each of the wedge surfaces 32 starts in the plane vertical to the central axis 10 of the bearing bush 6. The design of its shape follows the same design principals as the wedge surfaces 32 mentioned before. The surface therefore decreases along the circumferential direction starting in the plane and ending with the step 34 which leads the surface back to the plane. This enables almost the same functionality as in the embodiment mentioned above. The friction can be deceased further.

Furthermore, the distribution of oil via the axially running longitudinal groove 18 and the helical grooves 29 in the radial bearing surfaces 23 is only one example of designing the bearing bush 6 with the axial bearing surface 30 according to the invention. It will be well understood for a person skilled in the art that the invention can also be used with other types of oil distribution and/or radial bearing surfaces.

List of reference numerals

1	turbo charger
2	turbine
3	compressor
4	shaft
5	housing
6	bearing bush
7	compressor housing
8	turbine housing
9	central opening
10	central axis
11	oil drain bore
12	stepped bore in housing 5
13	pin
14	outer surface of bearing bush 6
15	inner surface of bearing bush 6
16	oil supply channel
17	oil supply (arrow)
18	longitudinal groove running in axial direction
19	central groove
20	annular grooves
21	axial bearing surfaces
22	radial bores
23	radial bearing surfaces
24	through-bore in pin 13
25	annular space
26	oil discharge (arrows)
27	drain opening
28	transition

29 helical groove
30 axial bearing surface
31 thrust surface
32 wedge surface
33 radial edge
34 step
35 radial edge

A axial direction
R radial direction
h height of step 34 at outer diameter
H height of step 34 at inner diameter
D outer diameter
d inner diameter

Patent Claims

1. A bearing bush (6) for a shaft (4) of a turbo charger (1), with at least one ring-shaped axial bearing surface (30) comprising at least a number of wedge surfaces (32) following each other in circumferential direction, characterized in that
the wedge surfaces (32) starting in one plane vertical to the central axis (10) of the bearing bush (6) and decreasing from that plane in axial direction (A) along the circumferential direction, wherein each of the wedge surfaces (32) ends on the edge of the adjacent wedge surface (32) with a step (34) in axial direction (A) below the plane.

2. The bearing bush (6) according to claim 1,
characterized in that
the axial bearing surface (30) further comprising thrust surfaces (31), which are co-planar in the plane vertical to a central axis (10) of the bearing bush (6) and that the thrust surfaces (31) and the wedge surfaces (32) are in an alternating arrangement with respect to the circumferential direction, wherein the wedge surface (32) starts at the one edge (35) of the thrust surface (31) and wherein the step (34) is arranged between the wedge surface (32) and the other edge (33) of the adjacent thrust surface (31).

3. The bearing bush (6) according to claim 1 or 2,
characterized in that
the height (H) of the step (34) at the inner diameter (d) of the axial bearing surface (30) is bigger than on the outer diameter (D) of the axial bearing surface (30).

4. The bearing bush (6) according to claim 3,

characterized in that
the height (H) at the inner diameter (d) is at least three times higher than the height (h) of the step (34) at the outer diameter (D).

5. The bearing bush (6) according one of claims 1 to 4,
characterized in that
the wedge surfaces (32) have a continuously curved shape.

6. The bearing bush (6) according to one of claims 1 to 5,
characterized in that
the outer diameter (D) and the inner diameter (d) of the axial bearing surfaces (30) are circular.

7. The bearing bush (6) according to one of claims 2 to 6,
characterized in that
the axial bearing surface (30) comprises at least three, preferably four, of the thrust surfaces (31).

8. The bearing bush (6) according to one of claims 2 to 7,
characterized in that
the overall area of the thrust surfaces (31) is smaller than those of the wedge surfaces (32).

9. The bearing bush (6) according to claim 8,
characterized in that
the overall area of the thrust surfaces (31) is less than one third of the overall area of the axial bearing surface (30).

10. The bearing bush (6) according to one of claims 2 to 9,
characterized in that

the edges (33, 35) between the thrust surfaces (31) and the wedge surfaces (32) run in radial direction (R).

11. The bearing bush (6) according to one of claims 1 to 10, characterized by
two axial bearing surfaces (30) on each of its two axial end faces (21).

12. The bearing bush (6) according to one of claims 1 to 11, characterized in that
oil distribution means are positioned on the at least inner surface (15) of the bearing bush (6).

13. The bearing bush (6) according to claim 12, characterized in that
at least one radial bearing surface (23) on its inner surface (15), comprising a groove (29) for oil distribution.

14. The bearing bush (6) according to claim 13, characterized in that
the groove is a helical groove (29).

15. Turbo charger (1) with at least one compressor (3) and a turbine (2) on a common shaft (4), with a housing (5), comprising a central opening (9) for receiving the shaft (4) in at least one bearing bush (6) characterized by
the bearing bush (6) according to one or more of claims 1 to 14.

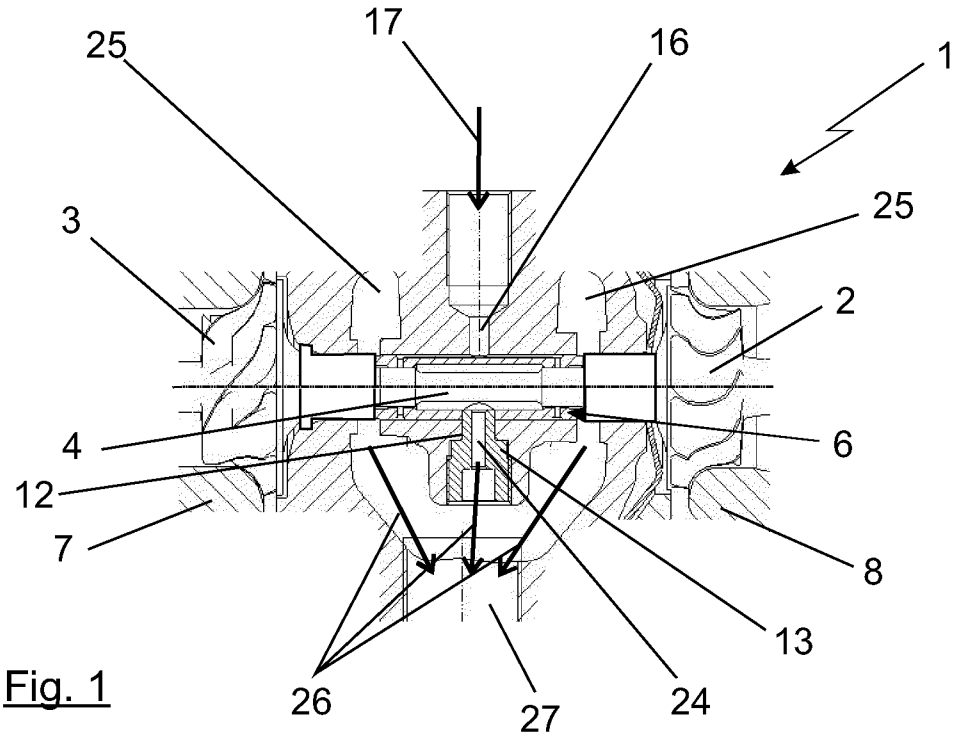
17
16
1
25
25
3
2
4
6
12
7
8
13
26
27
24

Fig. 1

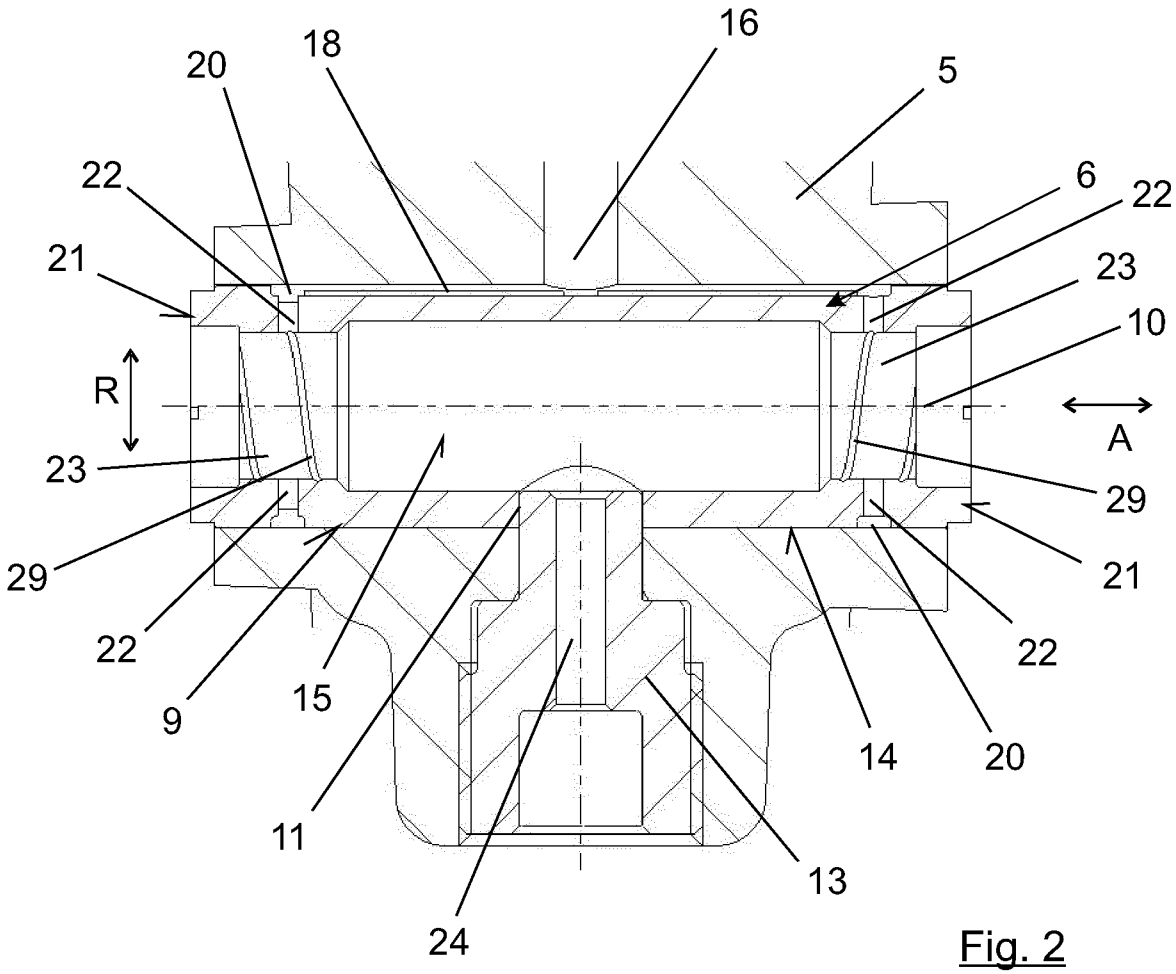
16
18
20
5
22
6
22
21
23
10
R
A
23
29
29
21
22
22
9
15
14
20
11
13
24

Fig. 2

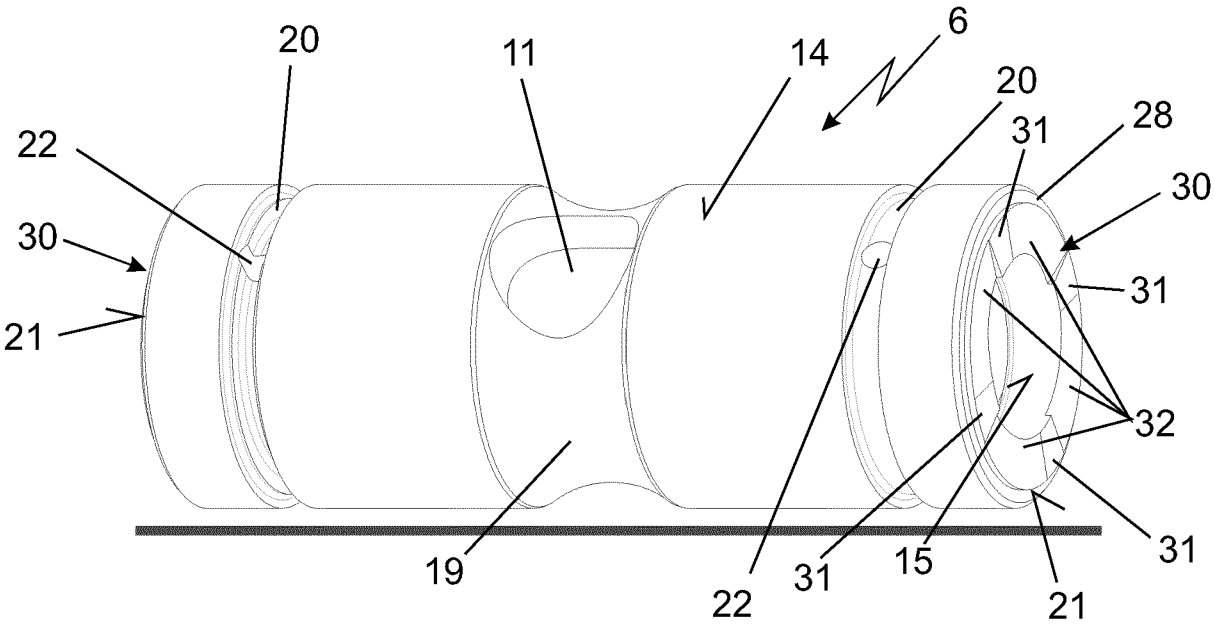
20
11
14
6
20
31
28
22
30
30
31
21
32
31
19
22
31
15
21

Fig. 3

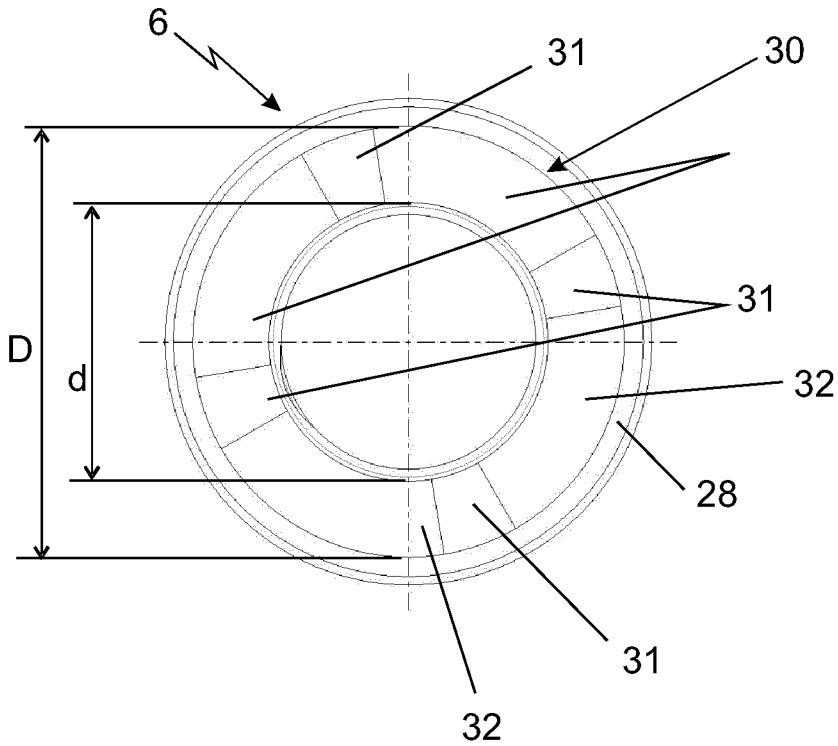
6
31
30
31
D
d
32
28
31
32

Fig. 4

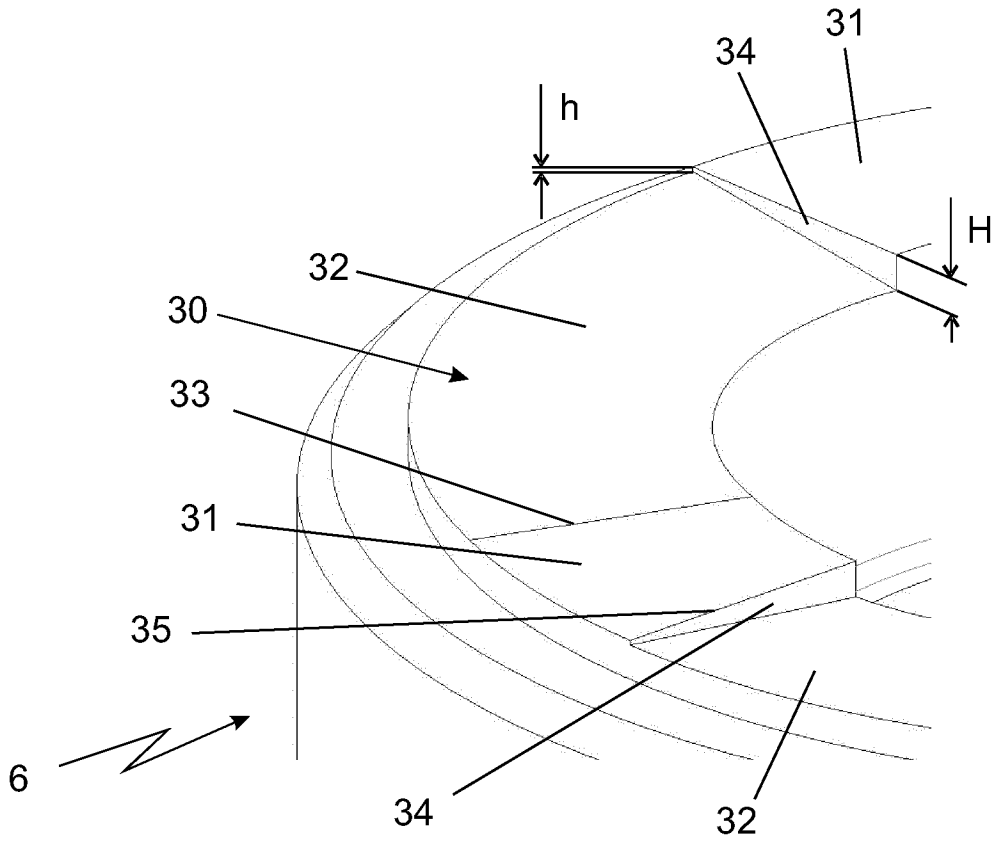

Fig. 5

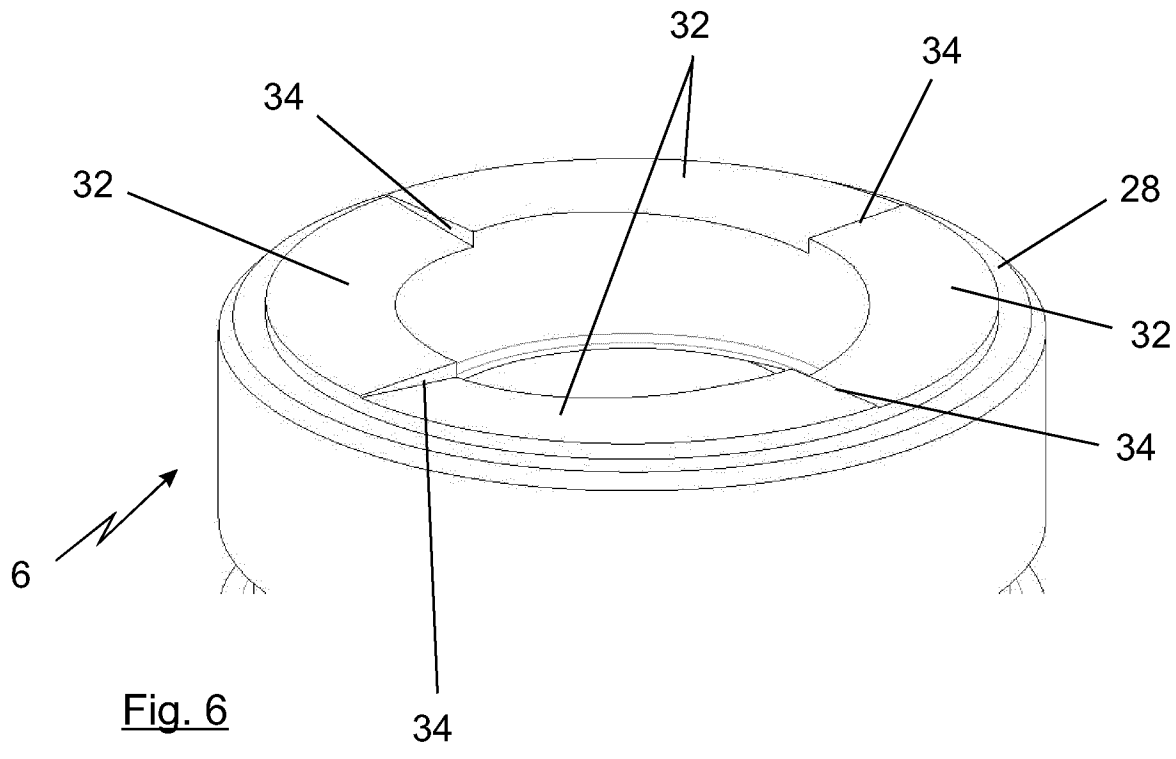

Fig. 6

INTERNATIONAL SEARCH REPORT

International application No
PCT/EP2017/079541

A. CLASSIFICATION OF SUBJECT MATTER
INV. F16C17/04 F16C33/10
ADD. F16C17/10 F02B39/00 F01D25/16

According to International Patent Classification (IPC) or to both national classification and IPC

B. FIELDS SEARCHED

Minimum documentation searched (classification system followed by classification symbols)
F16C F01D F02B

Documentation searched other than minimum documentation to the extent that such documents are included in the fields searched

Electronic data base consulted during the international search (name of data base and, where practicable, search terms used)
EPO-Internal

C. DOCUMENTS CONSIDERED TO BE RELEVANT

Category*	Citation of document, with indication, where appropriate, of the relevant passages	Relevant to claim No.
X	JP S58 123919 U (N.N.) 23 August 1983 (1983-08-23) figures 1,2,4	1,5,6
X Y	WO 2016/031013 A1 (MITSUBISHI HEAVY IND LTD [JP]) 3 March 2016 (2016-03-03) the whole document	2,5-11, 15 3,4, 12-14
X Y	GB 2 066 377 A (TAIHO KOGYO CO LTD) 8 July 1981 (1981-07-08) page 1, line 10 - line 88	1,2,5-10 3,4
Y	US 1 845 789 A (GILSON EMERY G) 16 February 1932 (1932-02-16) page 1, line 93 - page 2, line 16; figure 2	3,4

-/--

[X] Further documents are listed in the continuation of Box C.

[X] See patent family annex.

* Special categories of cited documents :

"A" document defining the general state of the art which is not considered to be of particular relevance

"E" earlier application or patent but published on or after the international filing date

"L" document which may throw doubts on priority claim(s) or which is cited to establish the publication date of another citation or other special reason (as specified)

"O" document referring to an oral disclosure, use, exhibition or other means

"P" document published prior to the international filing date but later than the priority date claimed

"T" later document published after the international filing date or priority date and not in conflict with the application but cited to understand the principle or theory underlying the invention

"X" document of particular relevance; the claimed invention cannot be considered novel or cannot be considered to involve an inventive step when the document is taken alone

"Y" document of particular relevance; the claimed invention cannot be considered to involve an inventive step when the document is combined with one or more other such documents, such combination being obvious to a person skilled in the art

"&" document member of the same patent family

Date of the actual completion of the international search	Date of mailing of the international search report
12 March 2018	20/03/2018

Name and mailing address of the ISA/	Authorized officer
European Patent Office, P.B. 5818 Patentlaan 2 NL - 2280 HV Rijswijk Tel. (+31-70) 340-2040, Fax: (+31-70) 340-3016	De Jongh, Cornelis

4

Form PCT/ISA/210 (second sheet) (April 2005)

C(Continuation). DOCUMENTS CONSIDERED TO BE RELEVANT

Category*	Citation of document, with indication, where appropriate, of the relevant passages	Relevant to claim No.
Y	US 2015/078884 A1 (UNEURA YUTAKA [JP] ET AL) 19 March 2015 (2015-03-19)	12-14
A	paragraph [0025] - paragraph [0058]; figures 1-4	1,2,15
Y	WO 2015/167844 A1 (BORGWARNER INC [US]) 5 November 2015 (2015-11-05)	12-14
A	page 5, line 5 - page 11, line 20; figures 1-7	15
X	DE 42 17 268 A1 (DILLMANN JUERGEN [DE]) 2 December 1993 (1993-12-02) the whole document	1,5,6,11
A	DE 102 38 415 A1 (VOLKSWAGEN AG [DE]) 4 March 2004 (2004-03-04) the whole document	1,2,6,7, 11,15
A	WO 2014/030727 A1 (TAIHO KOGYO CO LTD [JP]) 27 February 2014 (2014-02-27) abstract; figures 1,2	2,5-10

4

INTERNATIONAL SEARCH REPORT

Information on patent family members

International application No
PCT/EP2017/079541

Patent document cited in search report	Publication date	Patent family member(s)	Publication date
JP S58123919 U	23-08-1983	NONE	
WO 2016031013 A1	03-03-2016	CN 106662144 A	10-05-2017
		EP 3163103 A1	03-05-2017
		JP WO2016031013 A1	15-06-2017
		US 2017211616 A1	27-07-2017
		WO 2016031013 A1	03-03-2016
GB 2066377 A	08-07-1981	NONE	
US 1845789 A	16-02-1932	NONE	
US 2015078884 A1	19-03-2015	CN 104379900 A	25-02-2015
		DE 112013003184 T5	19-03-2015
		JP 6007982 B2	19-10-2016
		JP WO2014003057 A1	02-06-2016
		US 2015078884 A1	19-03-2015
		US 2017342998 A1	30-11-2017
		WO 2014003057 A1	03-01-2014
WO 2015167844 A1	05-11-2015	DE 112015002059 T5	12-01-2017
		US 2017108035 A1	20-04-2017
		WO 2015167844 A1	05-11-2015
DE 4217268 A1	02-12-1993	NONE	
DE 10238415 A1	04-03-2004	DE 10238415 A1	04-03-2004
		EP 1554477 A2	20-07-2005
		WO 2004018843 A2	04-03-2004
WO 2014030727 A1	27-02-2014	JP 2014040899 A	06-03-2014
		WO 2014030727 A1	27-02-2014