United States Patent [19]

Crapio

[11] **3,839,793**

[45] **Oct. 8, 1974**

[54] **CHILDREN'S FEEDING UTENSIL**

[75] Inventor: **Anthony Crapio**, New Haven, Conn.

[73] Assignee: **The Raymond Lee Organization, Inc.**, New York, N.Y. ; a part interest

[22] Filed: **Feb. 27, 1973**

[21] Appl. No.: **336,185**

[52] **U.S. Cl.** **30/123**, 240/6.46

[51] **Int. Cl.** **A47j 43/28**

[58] **Field of Search** ..... 30/324, 123, 327; 240/6.46, 2 E

[56] **References Cited**

UNITED STATES PATENTS

1,144,210	6/1915	Kincaid	240/6.46
2,787,055	4/1957	Wertz	30/324 X
3,185,832	5/1965	Nagamori	240/6.46
3,370,163	2/1968	Brill	240/6.46
3,510,643	5/1970	File	30/123 X

Primary Examiner—Al Lawrence Smith
Assistant Examiner—J. C. Peters
Attorney, Agent, or Firm—Howard I. Podell

[57] **ABSTRACT**

A utensil for the feeding of infants and children, in which the handle terminates in the face of a clown, with the utensil, such as a fork or a spoon, being fastened to the handle through the mouth of the face of the clown. The handle contains an electrical battery which is connected by a switch to illuminate the eyes and nose of the clown's face.

4 Claims, 4 Drawing Figures

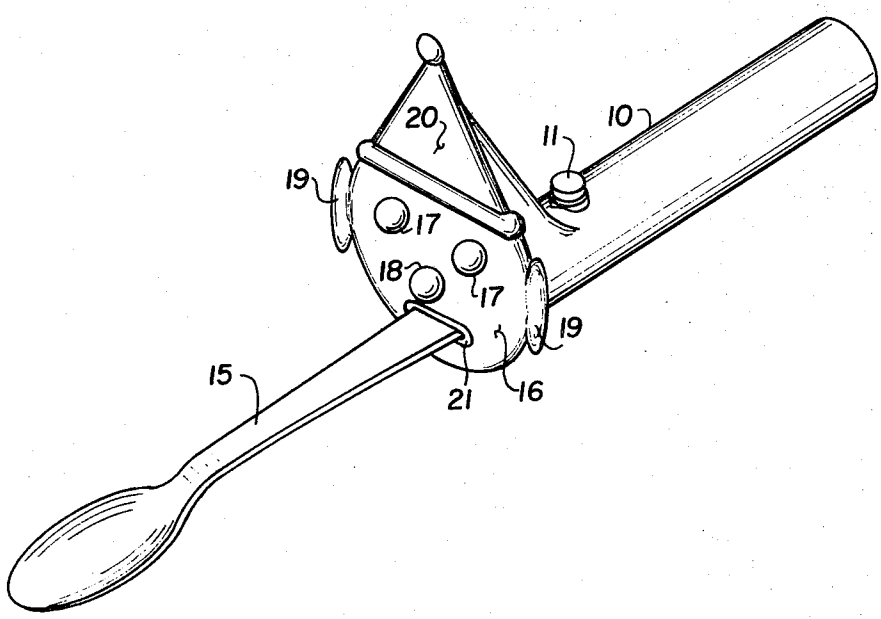

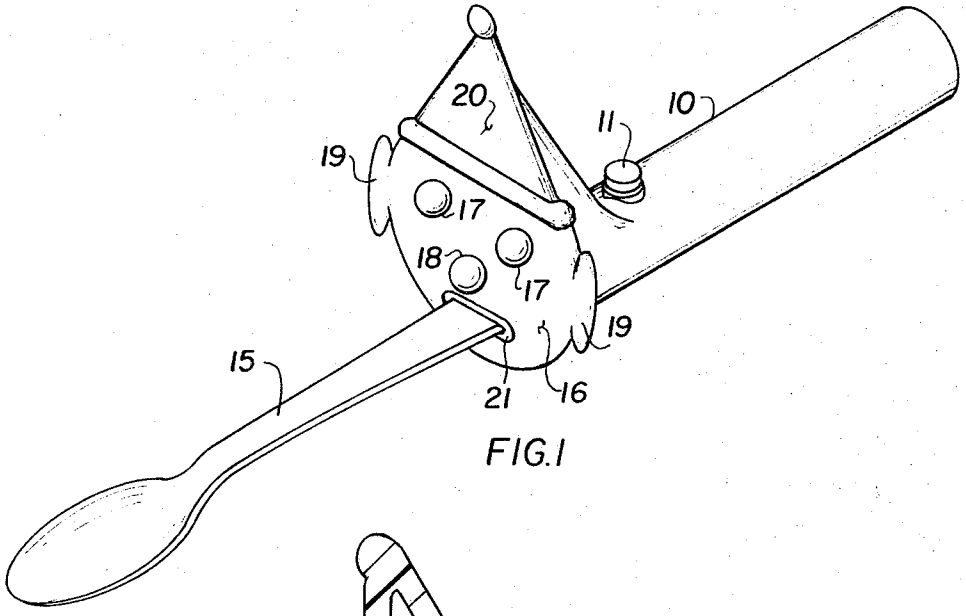

FIG. 1

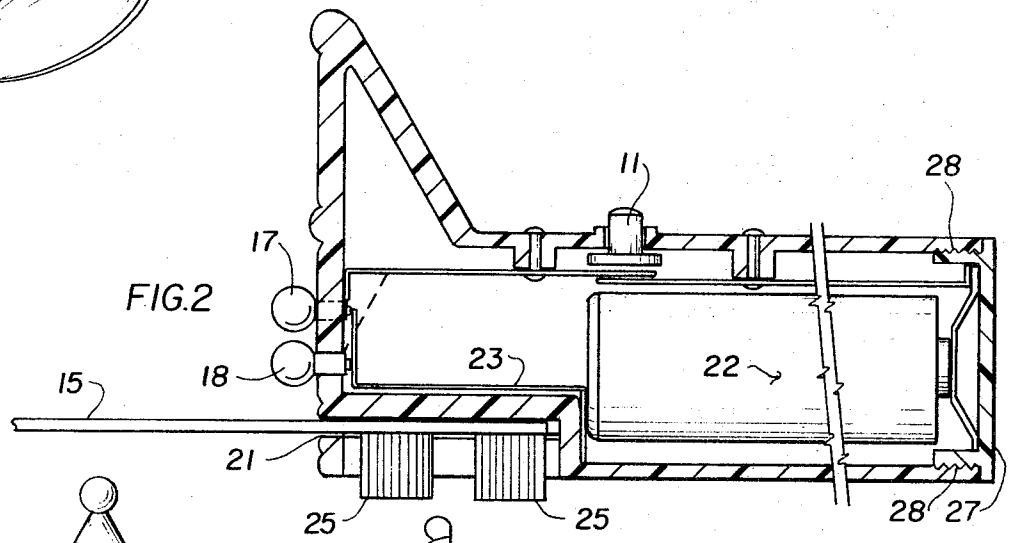

FIG. 2

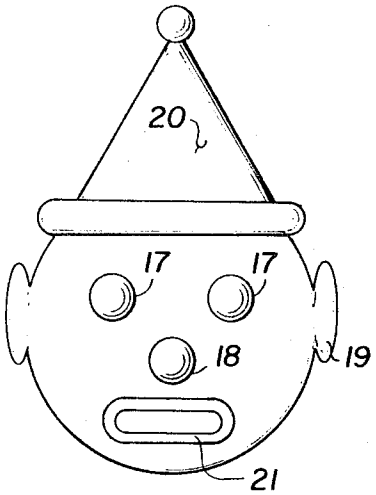

FIG. 3

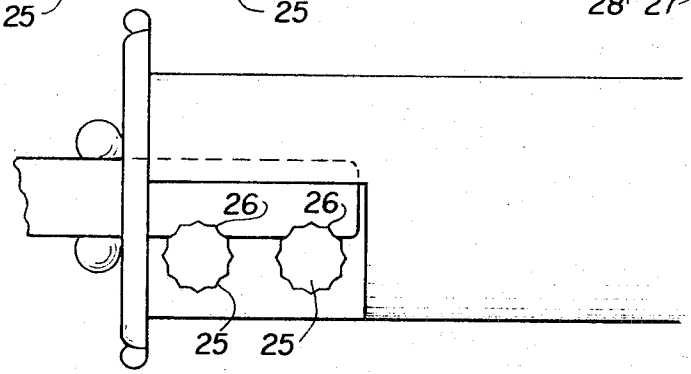

FIG. 4

CHILDREN'S FEEDING UTENSIL

SUMMARY OF THE INVENTION

This invention relates to a utensil for the feeding of children and infants, in which the illuminated face of a clown, which is built into the utensil handle, serves to entertain the child being fed.

An advantage of this invention is that it may be readily fastened to a fork or to a spoon. The actual feeding utensil utilized is removable for cleaning purposes.

The handle of the device terminates in the face of a clown, with an open mouth through which the utensil handle is fastened. The nose and eyes of the face of the clown may be in the form of flashlight bulbs, or they may be in the form of transparent beads of glass or plastic which are illuminated by a flashlight bulb. One or more flashlight batteries are mounted in the handle of the device and connected by means of a switch to the circuit of the eyes and nose of the clown.

Knurled set screws are mounted under the mouth section of the clown face, so as to fasten the spoon or fork to the device.

BRIEF DESCRIPTION OF THE DRAWING

The objects and features of the invention may be understood with reference to the following detailed description of an illustrative embodiment of the invention, taken together with the accompanying drawing in which:

FIG. **1** is a perspective view of the device mounted to a feeding spoon;

FIG. **2** is a cross-section of the device;

FIG. **3** is an end view of the device; and

FIG. **4** is a plan view of the bottom of the device.

DESCRIPTION OF THE PREFERRED EMBODIMENT

Turning now descriptively to the drawing, in which similar reference characters denote similar elements throughout the several views, FIGS. **1–4** illustrate the device **10** to which a spoon **15** is mounted. An electric switch **11** connects the internal electrical battery **22** to the light bulbs forming the eyes **17** and the nose **18** of the face **16** of the clown. The clown's face may be topped with a hat **20** and edges with ears **19.**

The spoon **15** is fastened into mouth **21** of the face of the clown by screws **25,** as shown in FIG. **2** and FIG. **4.** Screws **25** are bordered with knurl **26** so that the screws **25** may be readily manually rotated in tightening the spoon **15** or fork or other feeding implement.

Battery **22** may be removed by removal of handle cap **27** which is joined by threads **28** to the device **10.**

In the preferred embodiment, the eyes **17** of the clown are colored green, with the nose **18** of the clown being colored red.

Since obvious changes may be made in the specific embodiment of the invention described herein, it is indicated that all matter contained herein is intended as illustrative and not as limiting in scope.

Having thus described my invention, what I claim as new and desire to secure by letters patent of the United States is:

1. A utensil for the feeding of children consisting of a handle which terminates in the face of a clown, with provisions for an attachable disposable food utensil which fits into the mouth of said clown and is fastened to said handle, together with means to illuminate the eyes and the nose of the face of the clown by means of electric bulbs mounted to the face powered by a battery mounted inside the handle, said eyes and nose being formed of transparent material.

2. The combination as recited in claim **1** in which features of the face of the clown are formed of flashlight bulbs powered by the battery.

3. The combination as recited in claim **1** in which the utensil is shaped as a spoon.

4. The combination as recited in claim **1** in which the utensil is shaped as a fork.

* * * * *