United States Patent

Brindley et al.

[15] **3,699,970**

[45] **Oct. 24, 1972**

[54] **STRIATE CORTEX STIMULATOR**

[72] Inventors: **Giles Skey Brindley,** London; **Peter Eden Kirwan Donaldson,** Oxford, both of England

[73] Assignee: **National Research Development Corporation,** London, England

[22] Filed: **June 23, 1970**

[21] Appl. No.: **49,094**

[30] **Foreign Application Priority Data**

June 26, 1969 Great Britain.....32,398/69

[52] **U.S. Cl.**.....**128/419 R,** 3/1, 324/57, 340/407

[51] **Int. Cl.**.....**A61n 1/18**

[58] **Field of Search**.....3/1; 128/404, 410, 419 P, 419 R; 340/407; 324/101, 57 Q, 57 B; 343/703

[56] **References Cited**

UNITED STATES PATENTS

3,195,540	7/1965	Waller	128/419 P
3,491,377	1/1970	Bolie	3/1
2,703,344	3/1955	Anderson	3/1
3,057,356	10/1962	Greatbatch	128/419 P
3,426,748	2/1969	Bowers	128/419 P
2,721,316	10/1955	Shaw	3/1
3,449,768	6/1969	Doyle	3/1
2,784,375	5/1957	Mehlman	324/57 Q

FOREIGN PATENTS OR APPLICATIONS

575,075	4/1924	France	128/419 R
1,910,972	10/1969	Germany	128/404

Primary Examiner—William E. Kamm
Attorney—Cushman, Darby & Cushman

[57] **ABSTRACT**

An implantable neurological prosthetic device comprises a plurality of electrodes for stimulating the striate cortex, a matrix of normally closed gates connected in one-to-one relationship with said electrodes, and a plurality of radio receivers tuned to predetermined frequencies and constituting at least two distinctive sets, each gate being connected for switching to an open state to energize the respective one of said electrodes by a unique group of at least two of said receivers from respectively different sets thereof. The receivers are themselves energizable by externally located respective transmitters conveniently positioned by a technique in which the transmitter tuned circuit is included as one arm in a bridge circuit balanced for maximum absorption by the respective receiver tuned circuit. This technique is more generally applicable to any implant provided with a tuned circuit.

8 Claims, 2 Drawing Figures

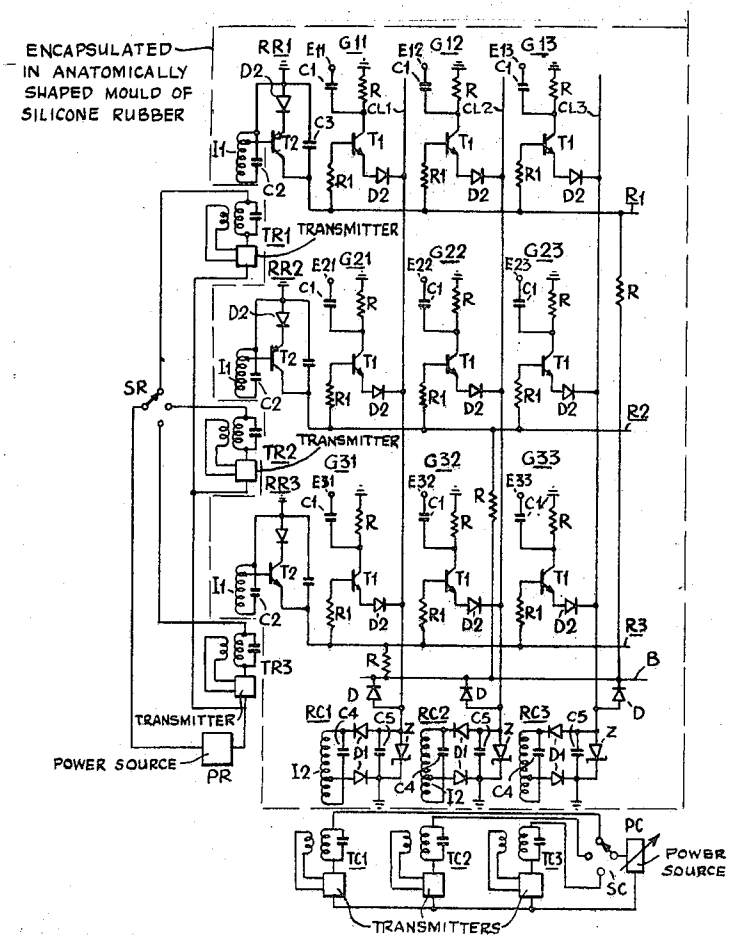

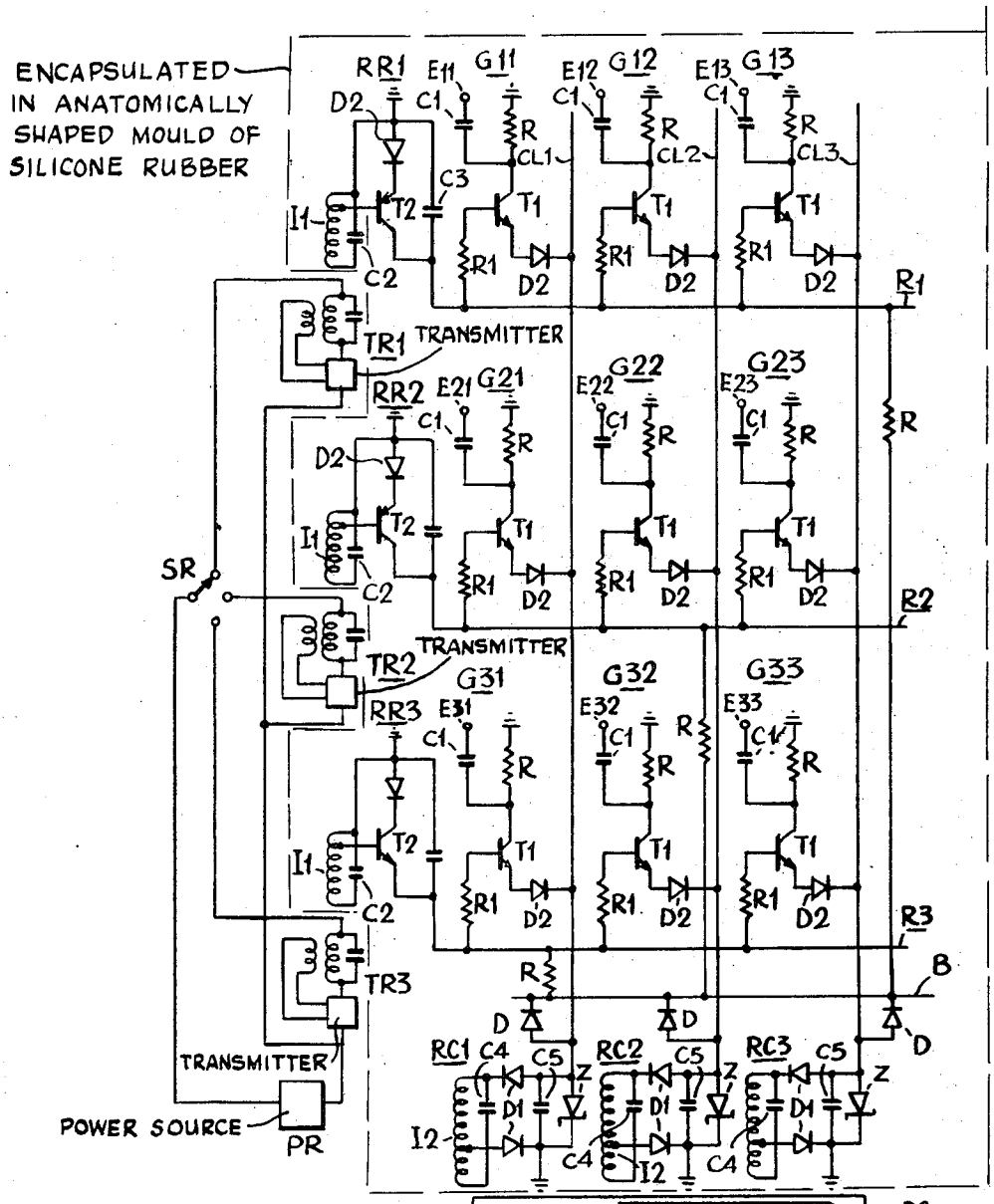
ENCAPSULATED IN ANATOMICALLY SHAPED MOULD OF SILICONE RUBBER
RR1
E11
G11
E12
G12
E13
G13
D2
C1
R
CL1
CL2
CL3
C3
T2
T1
I1
C2
R1
D2
TR1
TRANSMITTER
RR2
E21
G21
E22
G22
E23
G23
SR
TR2
RR3
E31
G31
E32
G32
E33
G33
TR3
R2
R3
B
D
RC1
RC2
RC3
C4
C5
Z
D1
I2
TRANSMITTER
POWER SOURCE
PR
PC
TC1
TC2
TC3
SC
TRANSMITTERS

Fig. 1.

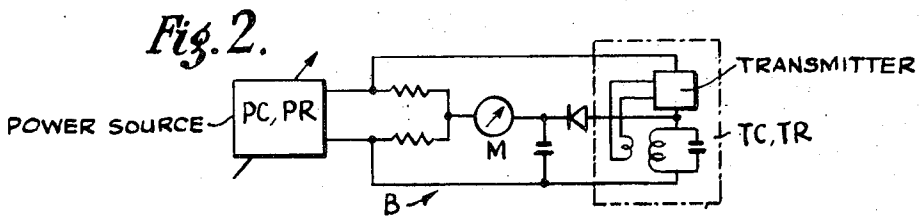
POWER SOURCE
PC, PR
M
B
TRANSMITTER
TC, TR

Fig. 2.

STRIATE CORTEX STIMULATOR

Consideration has been given to the possibility of producing a prosthesis which will afford electrical stimulation of the striate cortex and give useful visual sensations to patients who have lost the use of their eyes. Initial work to this end has proved promising. Briefly, this work involved the implantation of an array of radio-driven stimulators. The implant comprised an intracranial part and an extracranial part. The intracranial part had the form of a cap of silicone rubber, molded to fit the calcarine and neighboring cortex of the right hemisphere, and bearing a plurality of platinum electrodes. The electrodes were joined in a one-to-one relationship by a cable to the extracranial part which comprised an array of radio receivers between the parieto-occipital skull and pericranium. Delivery of a train of short pulses of radio waves to one of the receivers resulted in the patient "seeing" a small spot of white light, or phosphene, while simultaneous delivery to a number of receivers produced a pattern of phosphenes. In practice, it was proposed that delivery to such a device be affected by a corresponding array of radio transmitters housed in a cap or hat for the patient.

Various aspects of the above work are discussed in more detail in articles entitled "Transmission of electrical stimuli along many independent channels through a fairly small area of intact skin" by G.S. Brindley (J. Physiol. 177, 44-46P), "The visual sensations produced by electrical stimulation of the medical occipital cortex" by G.S. Brindley and W.S. Lewin (J. Physiol. 194, 54-55P), and "The sensations produced by electrical stimulation of the visual cortex" by G.S. Brindley and W.S. Lewin (J. Physiol. 196, pp.479–493).

Clearly a useful endeavor of this kind will involve a large number of stimulating electrodes, and corresponding numbers of receivers and transmitters.

According to the present invention in one aspect, the number of receivers in such a device, and by the same token the number of associated transmitters also, is reduced by employing a selection matrix arrangement for controlling the energization of the electrodes. Thus, a matrix of gate circuits is provided for connection to the stimulating electrodes, each gate being controlled by a unique group of receivers, one each from at least two sets of receivers connected with the matrix of gates in respectively different co-ordinate senses.

Selection matrix arrangements are in fact known in other applications and it is usual to talk of rows and columns in the matrix since the matrix is normally thought of as a two-dimensional, rectangular one with Cartesian coordinates. Reference is accordingly made hereinafter to rows and columns, but it is to be understood that this is for convenience only since the physical lay-out need not be rectangular and there can be more than two dimensions.

In any event, a clearer understanding of this aspect of the invention will be gathered from the following consideration of the accompanying drawings which are given by way of example, and in which:

FIG. 1 illustrates the circuit, partly schematically, of one embodiment of the invention, and

FIG. 2 similarly illustrates a further circuit ancillary to that of FIG. 1.

In FIG. 1, three row conductors R1, R2, R3 and three column conductors CL1, CL2, and CL3 are shown affording control of nine gates by way of six receivers. Three of the receivers RR1, RR2, RR3 are respectively connected to the row conductors R1, R2, R3 and the other three receivers RC1, RC2, RC3 are respectively connected to the column conductors CL1, CL2, and CL3. Gate G11 is connected to row conductor R1 and column conductor CL1, gate G12 is connected to row conductor R1 and column conductor CL2, and so on to gate G33 connected to row conductor R3 and column conductor CL3. Each gate is connected to a different one of nine stimulating electrodes denoted as terminals E11, E12, ... E33, and each electrode is energized by sending a radio signal to the row and column receivers to which the associated gate is connected. This energization is such that the row receiver connects the base of the gate transistor T1 to earth, while the column receiver lowers the emitter potential of that transistor, and so the gate is rendered conductive against the base electrode bias B which normally holds all of the gates non-conductive.

In operation of the device to produce a pattern of phosphenes, it is necessary that the gates be controlled by a scanning action. For example, if only gates G11 and G22 are to be activated, receivers RR1 and RC1 and receivers RR2 and RC2 are involved, but simultaneous energization of these four receivers will also activate gates G12 and G21. Accordingly, the row receivers are energized on a sequential basis and the column receivers for any gates to be activated in a given row are selectively energized simultaneously with the receiver for that row. This may appear to be a practical disadvantage consequent upon the use of a selection matrix arrangement, but it is in fact fully compatible with the normal visual processes. Indeed, there is practical advantage in that compensation can be made for the different threshold energization appropriate to stimulation with different ones of the electrodes. Thus, the row receivers can be scanned with energization at a predetermined level, while the column receivers are selectively energized at variable levels. Alternatively, variation of column receiver duration of energization can be employed in place of power level.

This mode of operation is indicated schematically in the drawing by the row transmitters TR1, TR2, TR3 and column transmitters TC1, TC2, TC3 which are tuned to match their respective receivers RR1, RR2, RR3 and RC1, RC2, RC3, and are respectively energizable from power sources PR and PC by way of selector switches SR and SC. It will be noted that the power source for the column transmitters is denoted as variable by an arrow, this denoting variability of transmitted pulse power level or duration.

In connection with production of patterns rather than "single" phosphenes, it is desirable, particularly where different energization levels are to be involved, that adjacent column receivers be tuned to mutually different frequencies to avoid any cross-talk, and these frequencies should also differ from that, or those, of the row receivers.

In this same connection, it is to be understood that the primary input pattern can be derived from a television camera tube or other suitable form of sensor, the output of which is translated to appropriate signal form

for energization of the transmitters to stimulate a corresponding pattern in the recipient. In general, the transmitters will normally energize the row receivers in sequence, each for a period during which any relevant associated column receivers are also energized, so giving a column scanning action within each phase of a row scanning action.

While various circuit arrangements may be employed for the receivers of the presently proposed device, and also for the associated receivers, the illustrated common emitter configuration is preferred for the gates.

For completeness, the component values of the illustrated example are as follows:

C1 = 1μF	C2 = 100pF
C3 = 1000pF	C4 = 150pF
C5 = 10000pF	R1 = 8kΩ

Transistors T1 currently have Vceo ≥ 60V.

Diodes D1 are currently chosen with p.i.v. ≥ 60V.

Zener diodes Z are 55V, that is, less than Vceo of T1.

The tuned circuit coils are all wound from common material to 1 cm. diameter. Coils I1 for the rows are each wound to twelve turns and tapped at two turns for a frequency of 10 Mc/s. Coils I2 and I3 are used in alternating sequence along the columns, I2 being wound to thirteen turns and tapped at ten turns for a frequency of 8 Mc/s, and I3 being wound to seventeen turns and tapped at ten turns for a frequency of 6 Mc/s.

Turning to another aspect of the present invention: difficulty may arise in attaining the desired location of the transmitters relative to the receivers since the latter are implanted while the former are employed externally of the subject. The difficulty is not exclusive to the above-proposed visual prosthetic device, but it clearly becomes more significant when a number of inductive links are to be established within a small area. It might also be mentioned that this difficulty is not readily resolved by attempting to mark on a patient's exterior the locations of the implanted receivers.

A technique for obviating this difficulty has been evolved in the course of the present work, which technique derives from the fact that the implant or implant item to be located in the present instance includes a tuned circuit, and there is a corresponding external tuned circuit in the associated transmitter. Location is achieved by connecting the external tuned circuit in a bridge circuit including a meter and arranged for balance when a corresponding tuned circuit is immediately adjacent that of the bridge. Thus, the bridge is balanced for maximum absorption from its tuned circuit and it can be used to locate the corresponding tuned circuit of an implant by watching the meter while scanning the patient with the tuned circuit.

This technique is naturally suitable when, as here, the tuned circuits are to be provided anyway, and this is indicated in FIG. 2 by the bridge circuit B in which the voltage to one side of the meter M is derived from the tuned circuit of the relevant transmitter.

The results with this technique have been found so satisfactory that tuned circuits, or an adjustable tuned circuit, might be provided specifically for the purposes of receiver location. Indeed the technique can be employed more generally in the location of implanted devices, and an absorption or rejection mode may be employed.

Accordingly, the present invention provides, in a second aspect, apparatus for locating an implant including a tuned circuit, the apparatus comprising a bridge circuit including a corresponding tuned circuit as one arm of the bridge, and means for indicating the degree of balance of the bridge. The indicating means need not necessarily be of visual form, such as a meter, but may alternatively, or in addition, be of audible form whereby a variable tone is generated in dependence upon the degree of bridge balance.

Yet another aspect of the present invention involves the manufacture, and in particular the molding and encapsulation of implantable prosthetic devices. It is usual to encapsulate such devices with a silicone rubber material which is conventionally available as a paste in a tube. However, this form of material has not been found fully satisfactory in a situation such as that for the above form of device where the encapsulating material can also serve as a mold material to be formed to a required shape in which other components are carried. The necessary molding will often, as here, be best carried out by casting and a paste is clearly not suitable. Also, the usual paste material is only self-adhesive and not suitable for encapsulating complex physical shapes, such as an array of electrodes. Lastly, the usual paste material is somewhat hard when cured for the present purpose.

These difficulties have been reduced in accordance with the invention in its last-mentioned aspect, by mixing a medical silicone rubber adhesive of paste form with a solvent to form a liquid adhesive, and adding an inert filler. Initially, the adhesive paste was simply mixed with the solvent, but this was found to be too thin and to leave cavities and voids after pouring and curing with consequent trapping of air and water. This is undesirable as a cause of electrical failure, and the filler is included to reduce this problem. As to the constituent proportions: these can be varied dependent on the hardness or softness of cured rubber required. However, it is useful to specify the constituents of the product found generally satisfactory for the above purposes, namely, Dow Corning Medical Adhesive Type A, Dow Corning Medical Fluid 360 and xylene in the respective proportions of nine inches, 5 c.c. and 10 c.c. This resultant adhesive does not shrink, distort, or absorb water.

We claim:

1. An implantable device comprising a plurality of electrodes for stimulating the striate cortex, a matrix of normally closed gates connected in one-to-one relationship with said electrodes, and a plurality of radio receivers tuned to predetermined frequencies and constituting at least two distinctive sets, each gate being connected for switching to an open state to energize the respective one of said electrodes by a unique group of at least two of said receivers from respectively different sets thereof.

2. A device according to claim 1 wherein adjacent receivers in at least one set thereof are tuned to respectively different frequencies.

3. A device according to claim 1 wherein each of said gates comprises a semi-conductor switching device connected in the common emitter configuration.

4. A device according to claim 1 in combination with a plurality of radio transmitters respectively associated

with and tuned to common frequencies with said receivers in a one-to-one relationship, at least one set of said transmitters being energizable at a predetermined constant level, and the transmitters of at least one other set thereof being energizable at adjustable power levels.

5. A device according to claim 1, in combination with a bridge circuit having a tuned circuit in one arm thereof adapted to match that of one of said receivers, and means for indicating the degree of balance of said bridge circuit.

6. A device according to claim 1 wherein said gates and said receivers are encapsulated in an anatomically shaped mold of silicone rubber.

7. In combination,

an implantable device including a plurality of electrodes for stimulating the striate cortex, a matrix of normally closed gates connected in one-to-one relationship with said electrodes, and a plurality of radio receivers tuned to predetermined frequencies and constituting at least two distinctive sets, each gate being connected for switching to an open state to energize the respective one of said electrodes by a unique group of at least two of said receivers from respectively different sets thereof, and

an exterior mounted device including a plurality of radio transmitters respectively associated with and tuned to common frequencies with said receivers in a one-to-one relationship, at least one set of said transmitters being energizable at a predetermined constant level, and the transmitters of at least one other set thereof being energizable at adjustable power levels, and means for mounting said exterior device on a body adjacent said implantable device.

8. In combination,

an implantable device comprising a plurality of electrodes for stimulating the striate cortex, a matrix of normally closed gates connected in one-to-one relationship with said electrodes, a plurality of radio receivers tuned to predetermined frequencies and constituting at least two distinctive sets, means for energizing said received each gate being connected for switching to an open state to energize the respective one of said electrodes by a unique group of at least two of said receivers from respectively different sets thereof, and

an exterior device including a bridge circuit having a tuned circuit in one arm thereof for matching one of said receivers, and means for indicating the degree of balance of said bridge circuit.

* * * * *