US0D1051390S

(12) United States Design Patent

Hoshino et al.

(10) Patent No.: US D1,051,390 S
(45) Date of Patent: ** Nov. 12, 2024

(54) **X-RAY IMAGING APPARATUS**

(71) Applicant: **SHIMADZU CORPORATION**, Kyoto (JP)

(72) Inventors: **Syogo Hoshino**, Kyoto (JP); **Shinya Hasebe**, Kyoto (JP)

(73) Assignee: **SHIMADZU CORPORATION**, Kyoto (JP)

(**) Term: **15 Years**

(21) Appl. No.: **29/811,230**

(22) Filed: **Oct. 12, 2021**

(30) **Foreign Application Priority Data**

Apr. 15, 2021 (JP) ..... 2021-008014 D

(51) **LOC (14) Cl.** **24-01**

(52) **U.S. Cl.**
USPC **D24/158**

(58) **Field of Classification Search**
USPC D24/107, 158–161, 183–186, 231–232, D24/234
CPC A61B 5/0033; A61B 6/03; A61B 6/032; A61B 6/4452; A61B 6/00; A61B 6/4441; A61B 6/4458; A61B 6/4464; A61B 6/4275; A61B 8/4218; G03B 42/02
See application file for complete search history.

(56) **References Cited**

U.S. PATENT DOCUMENTS

D378,133 S * 2/1997 Murakami D24/158
6,101,239 A * 8/2000 Kawasaki G01R 33/28 324/307
D558,877 S * 1/2008 Ogiwara D24/158
(Continued)

OTHER PUBLICATIONS

Shimadzu Medical, Release of New Angiography System "Trinias", Published on: Jun. 10, 2022, YouTube.com, Retrieved from Internet: https://www.youtube.com/watch?v=tHydZLmDQDU (Year: 2022).*

(Continued)

Primary Examiner — John R Yeh
Assistant Examiner — Edward P Jones
(74) *Attorney, Agent, or Firm* — JCIPRNET

(57) **CLAIM**

The ornamental design for a X-ray imaging apparatus as shown and described.

DESCRIPTION

The patent or application file contains a least one drawing executed in color. Copies of this patent or patent application publication with color drawing(s) will be provided by the Office upon request and payment of the necessary fee.

FIG. **1** is a perspective view of a X-ray imaging apparatus showing a first embodiment of our new design;
FIG. **2** is a front view thereof;
FIG. **3** is a rear view thereof;
FIG. **4** is a left side view thereof;
FIG. **5** is a right side view thereof;
FIG. **6** is a top view thereof;
FIG. **7** is a bottom view thereof;
FIG. **8** is a perspective view of a X-ray imaging apparatus showing a second embodiment of our new design;
FIG. **9** is a front view thereof;
FIG. **10** is a rear view thereof;
FIG. **11** is a left side view thereof;
FIG. **12** is a right side view thereof;
FIG. **13** is a top view thereof; and,
FIG. **14** is a bottom view thereof.

The broken lines illustrate portions of the X-ray imaging apparatus that form no part of the claimed design.

1 Claim, 14 Drawing Sheets
(8 of 14 Drawing Sheet(s) Filed in Color)

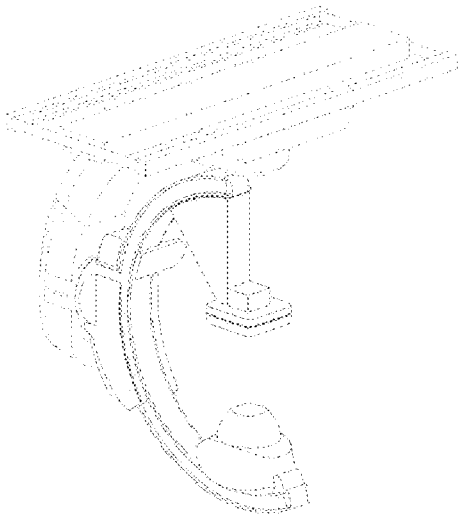

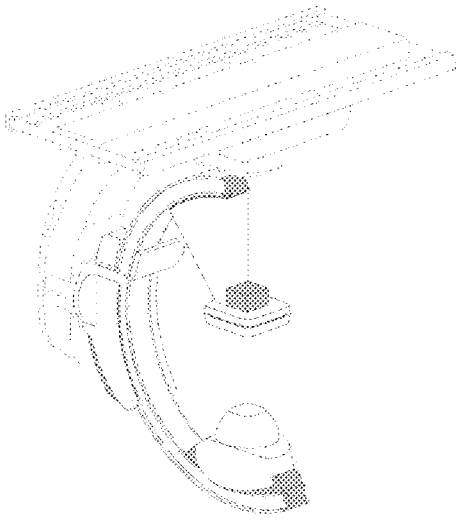

(56) **References Cited**

U.S. PATENT DOCUMENTS

D658,762	S *	5/2012	Yokoyama	D24/158
D748,264	S *	1/2016	Dörre	D24/158
D748,800	S *	2/2016	Ohmukai	D24/158
10,607,809	B2 *	3/2020	Adachi	A61B 6/04
D896,967	S *	9/2020	Roth	D24/158
D1,018,855	S *	3/2024	Roth	D24/158
D1,027,180	S *	5/2024	Roth	D24/158
D1,031,989	S *	6/2024	Roth	D24/158
2006/0153340	A1 *	7/2006	Engstrom	A61B 6/4441 378/197
2012/0281812	A1 *	11/2012	Noda	A61B 6/469 378/62
2014/0072105	A1 *	3/2014	Belei	A61B 6/461 378/205
2024/0112796	A1 *	4/2024	Bartuschat	G16H 40/40
2024/0138788	A1 *	5/2024	Johnson	A61B 6/4441

OTHER PUBLICATIONS

Shimadzu, Trinias Catalog, Published on: Jun. 29, 2021, shimadzu.com, Retrieved from Internet: https://www.shimadzu.com/med/virtual-exhibition/trinias/pdf/C505-E085A_NewTrinias_catalog_e.pdf (Year: 2021).*

ImageWorks Corporation, ImageScan HD Video, Published on: May 3, 2019, YouTube.com, Retrieved from Internet: https://www.youtube.com/watch?v=la0Ossz9qDM&t=2s (Year: 2019).*

Shimadzu, Internet Archive Screen Capture of Shimadzu Angiography Products Page, Published on: Oct. 29, 2020, web.archive.org, Retrieved from Internet: https://web.archive.org/web/20201029141214/https://www.shimadzu.com/med/products/angio/index.html (Year: 2020).*

Daic, Shimadzu Medical Systems Teams With Change Healthcare Cardiology, Published on: Oct. 17, 20218, dicardiology.com, Retrieved from Internet: https://www.dicardiology.com/content/shimadzu-medical-systems-teams-change-healthcare-cardiology (Year: 2018).*

Daic, Shimadzu Medical Systems USA Installs First Trinias Score Opera Cardiac Catheterization Lab in the US, Published on: Oct. 16, 2023, dicardiology.com, Retrieved from Internet: https://www.dicardiology.com/content/shimadzu-medical-systems-usa-installs-first-trinias-score-opera-cardiac-catheterization-lab (Year: 2023).*

Shimadzu, Trinias Catalog, Downloaded on: Apr. 23, 2024 (corrected updated date /EPJ/), shimadzu.com, Retrieved from Internet: https://www.shimadzu.com/med/virtual-exhibition/trinias/pdf/C505-E085A_NewTrinias_catalog_e.pdf (Year: 2024).*

* cited by examiner

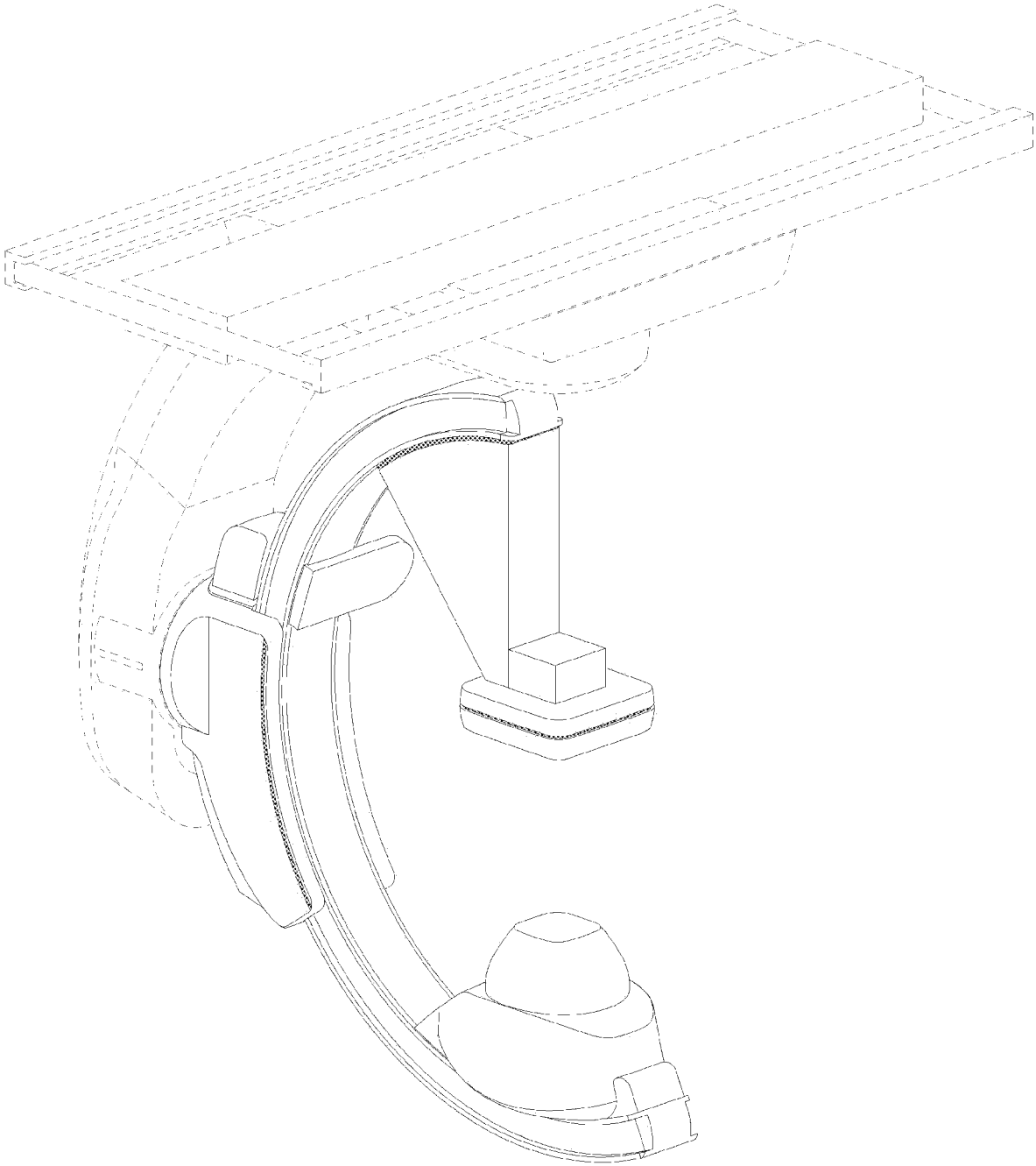

FIG. 1

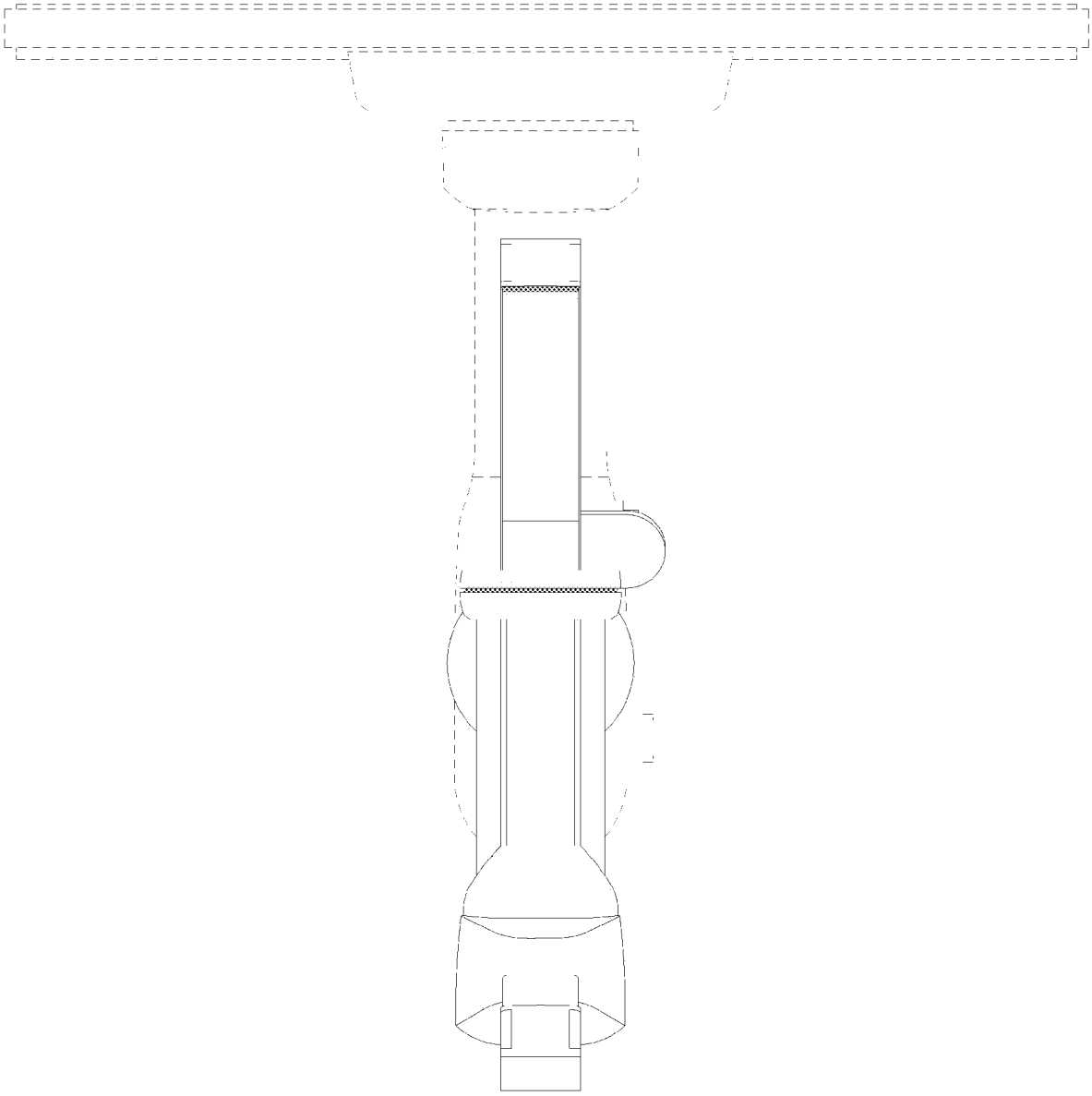

FIG. 2

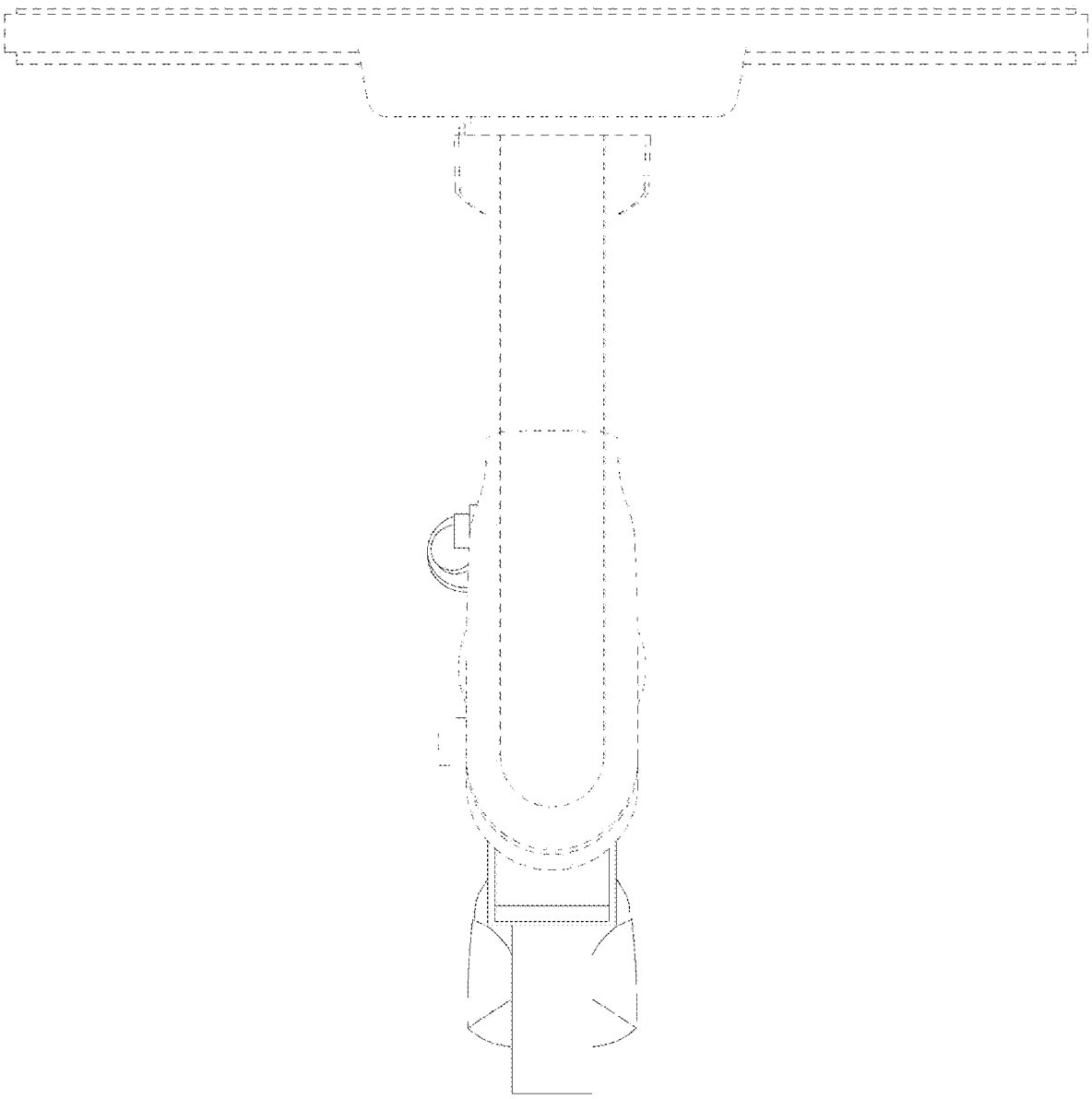

FIG. 3

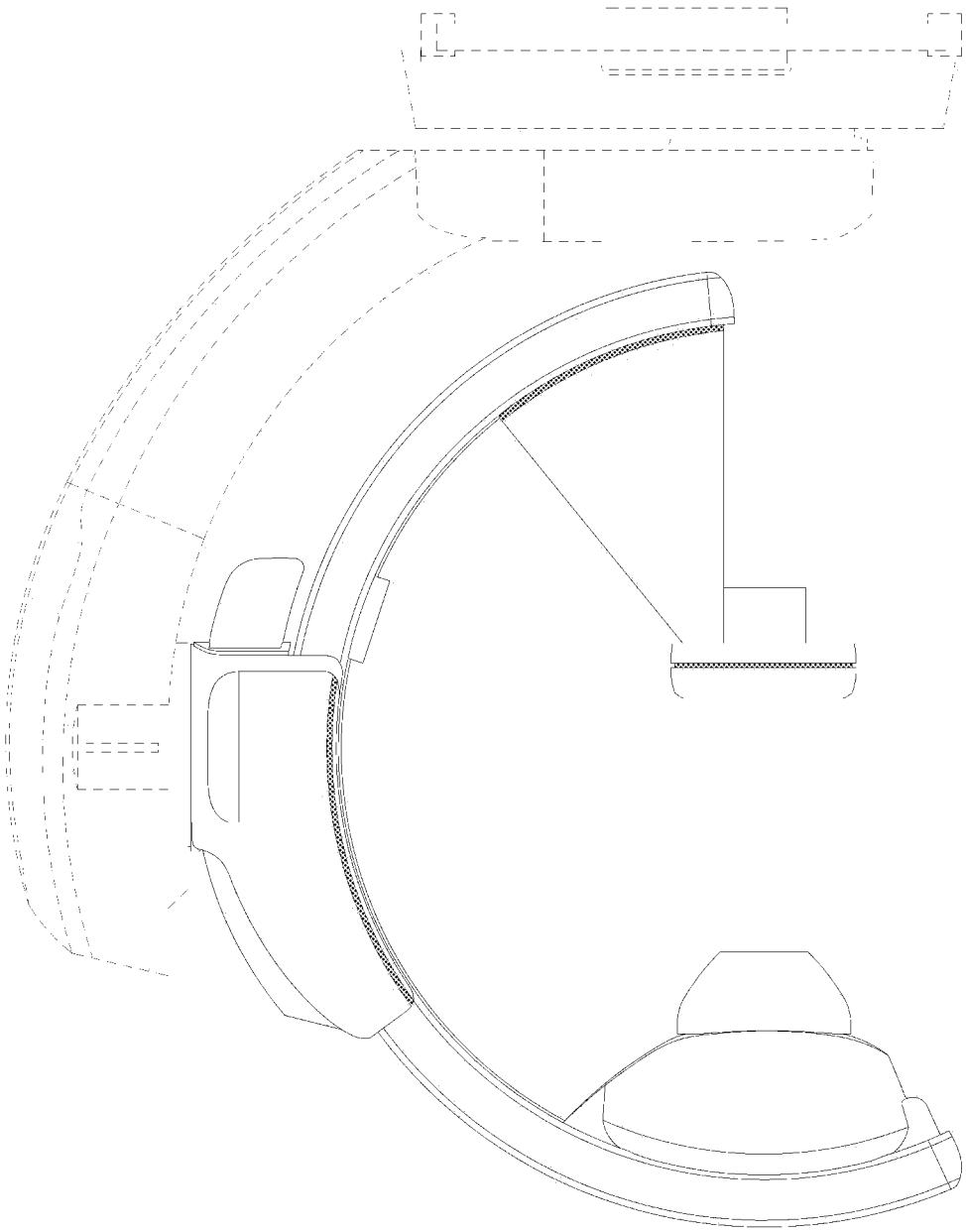

FIG. 4

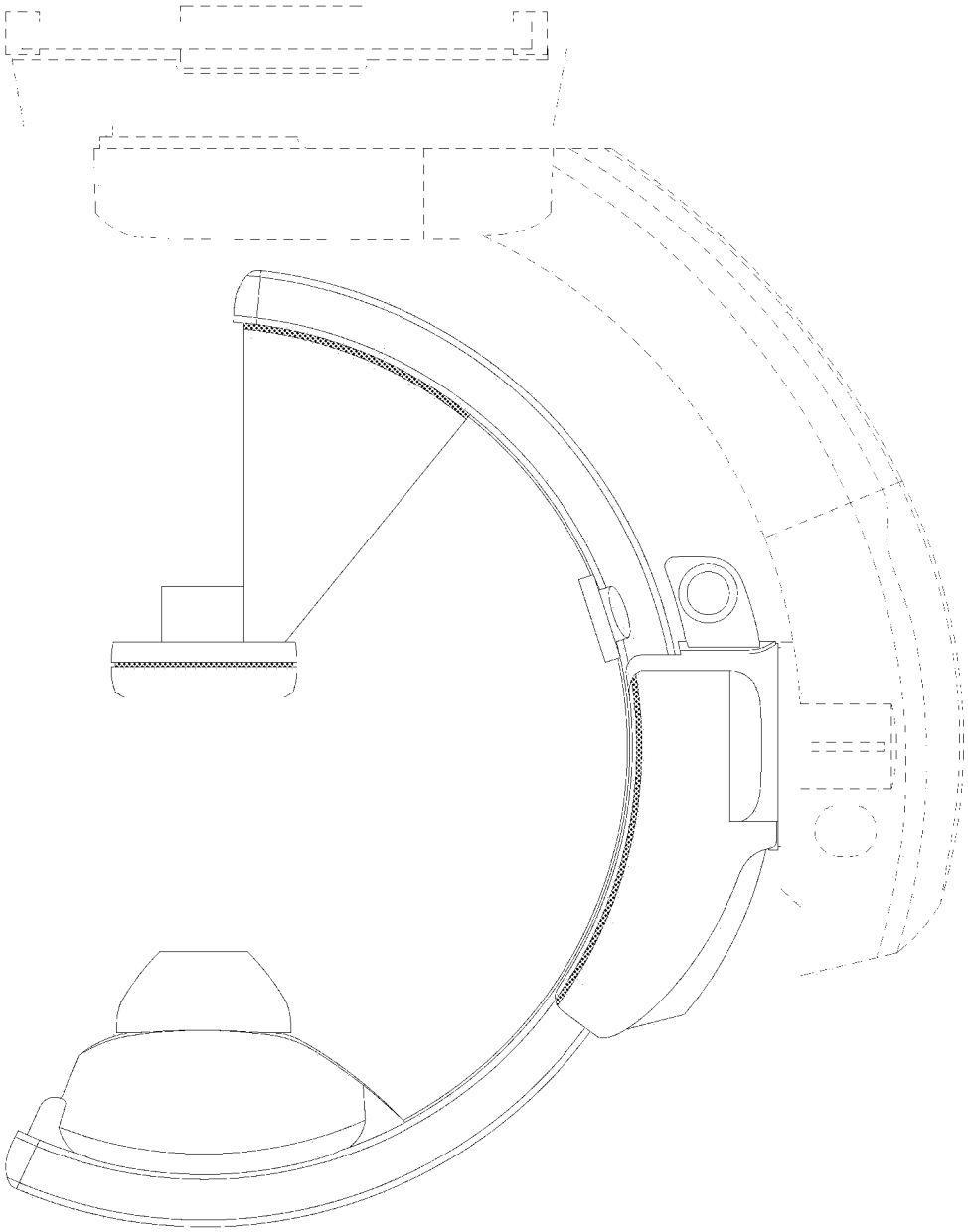

FIG. 5

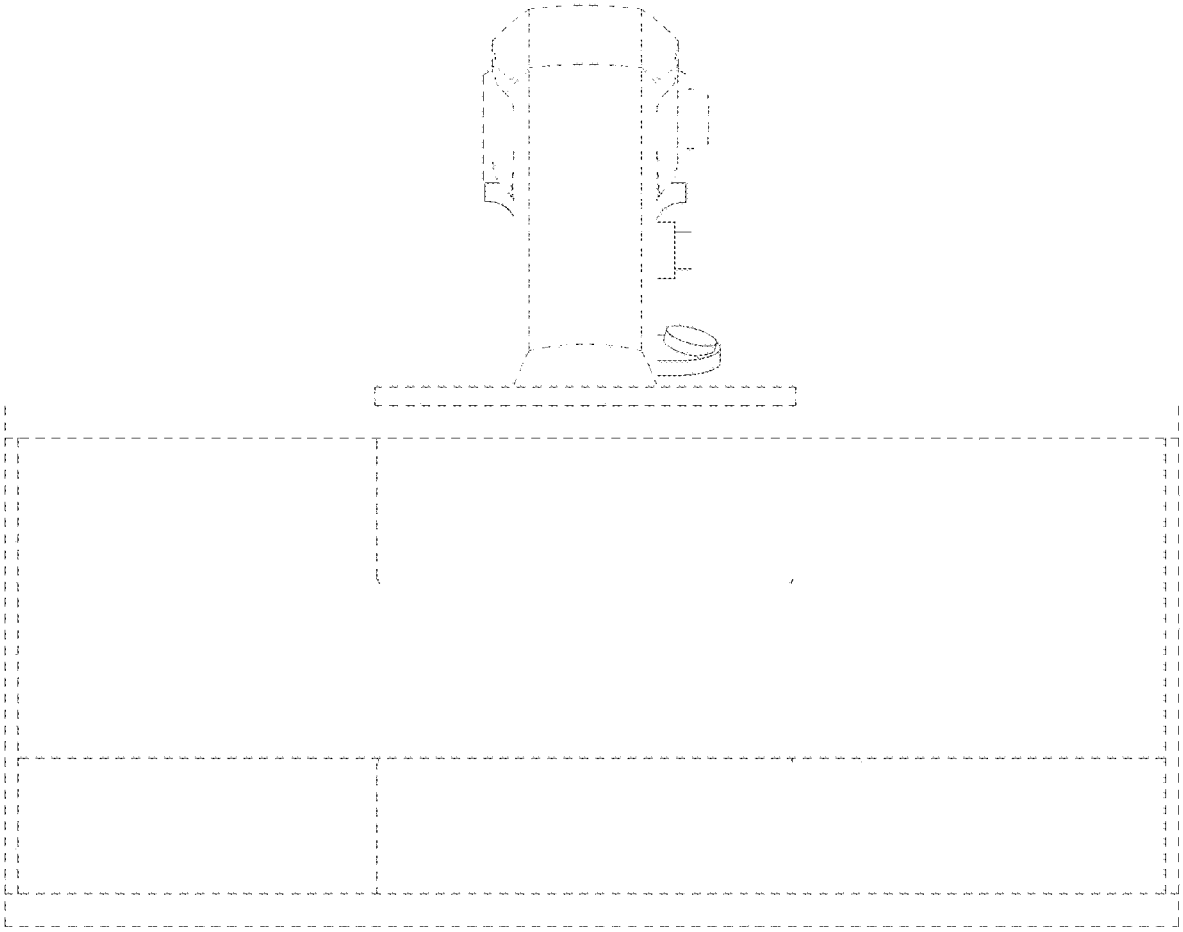

FIG. 6

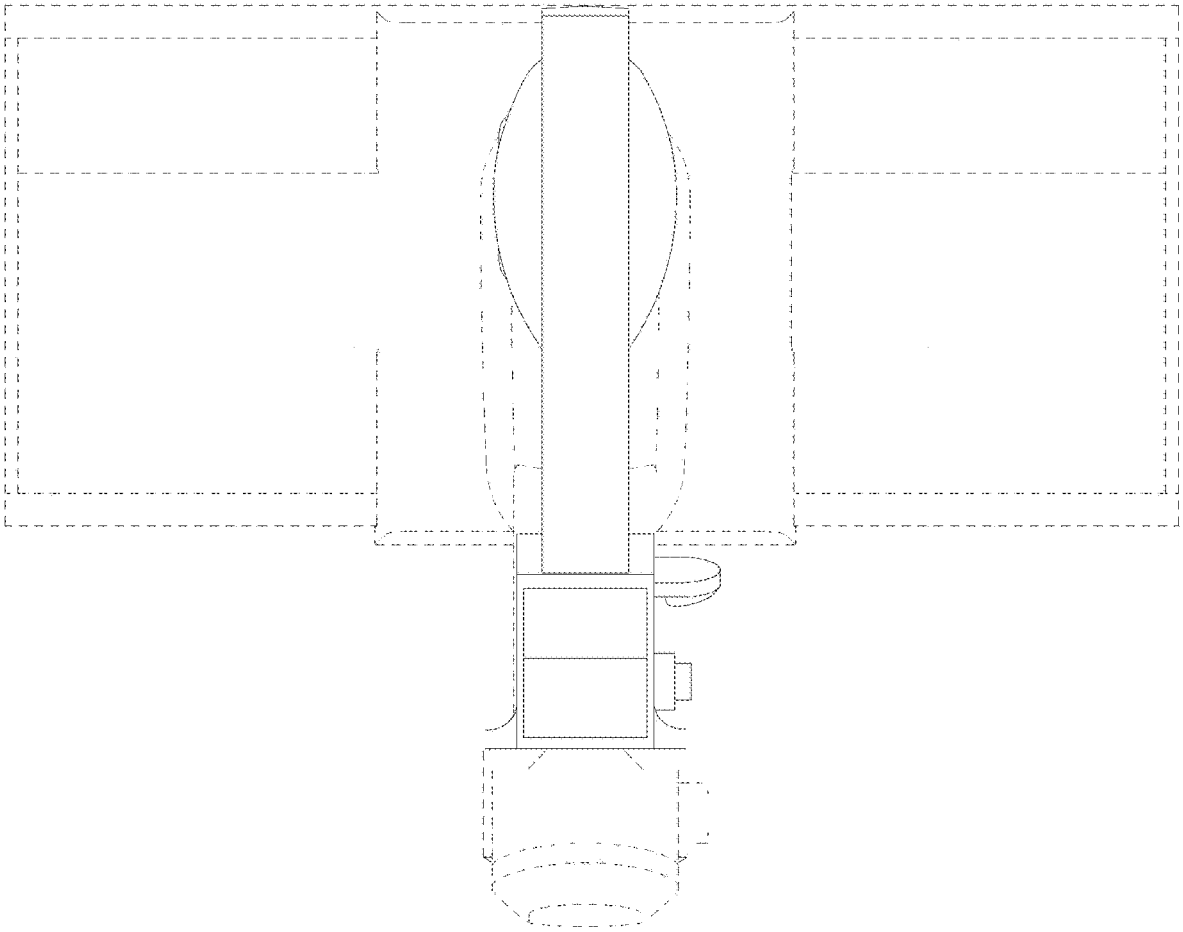

FIG. 7

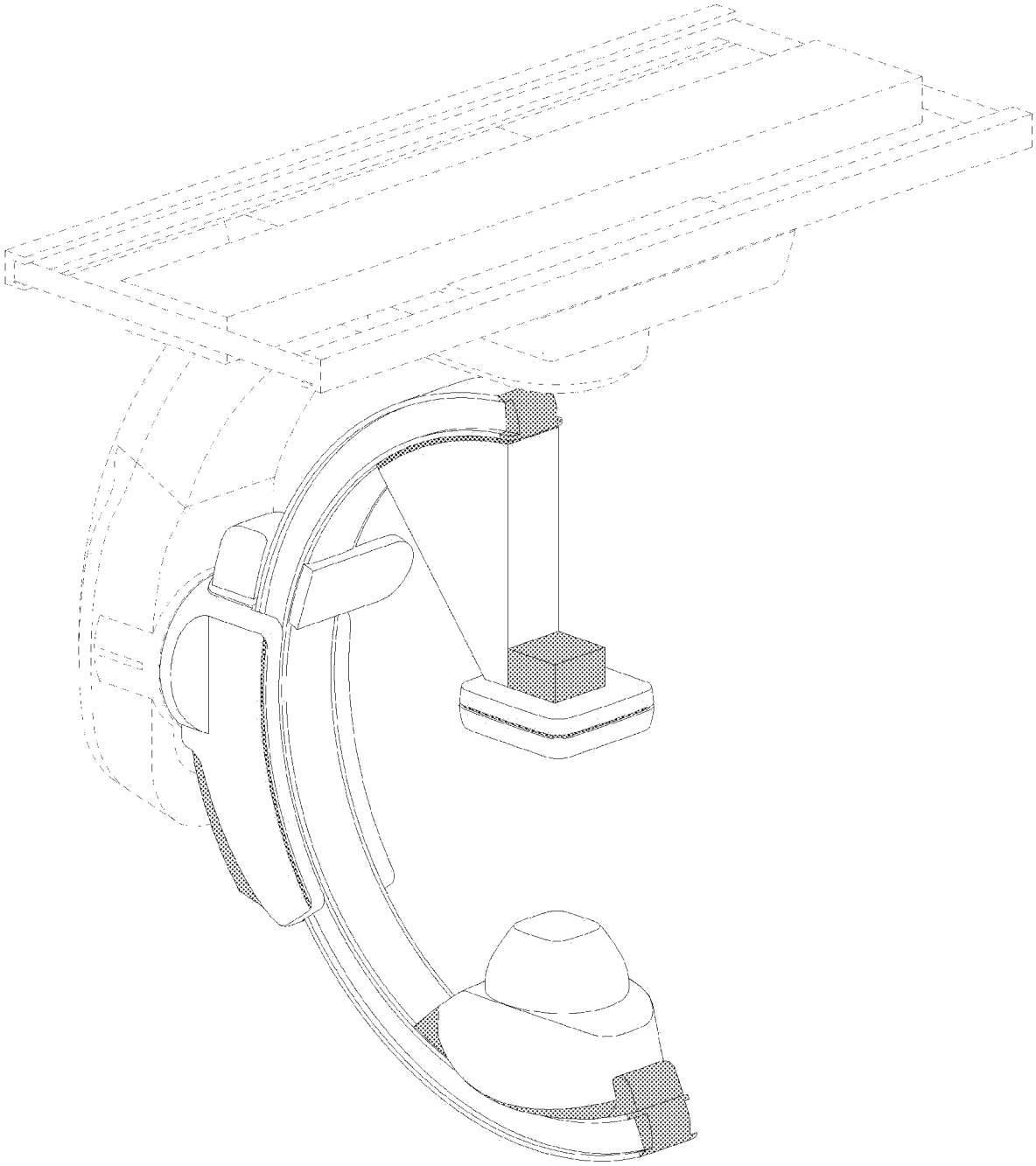

FIG. 8

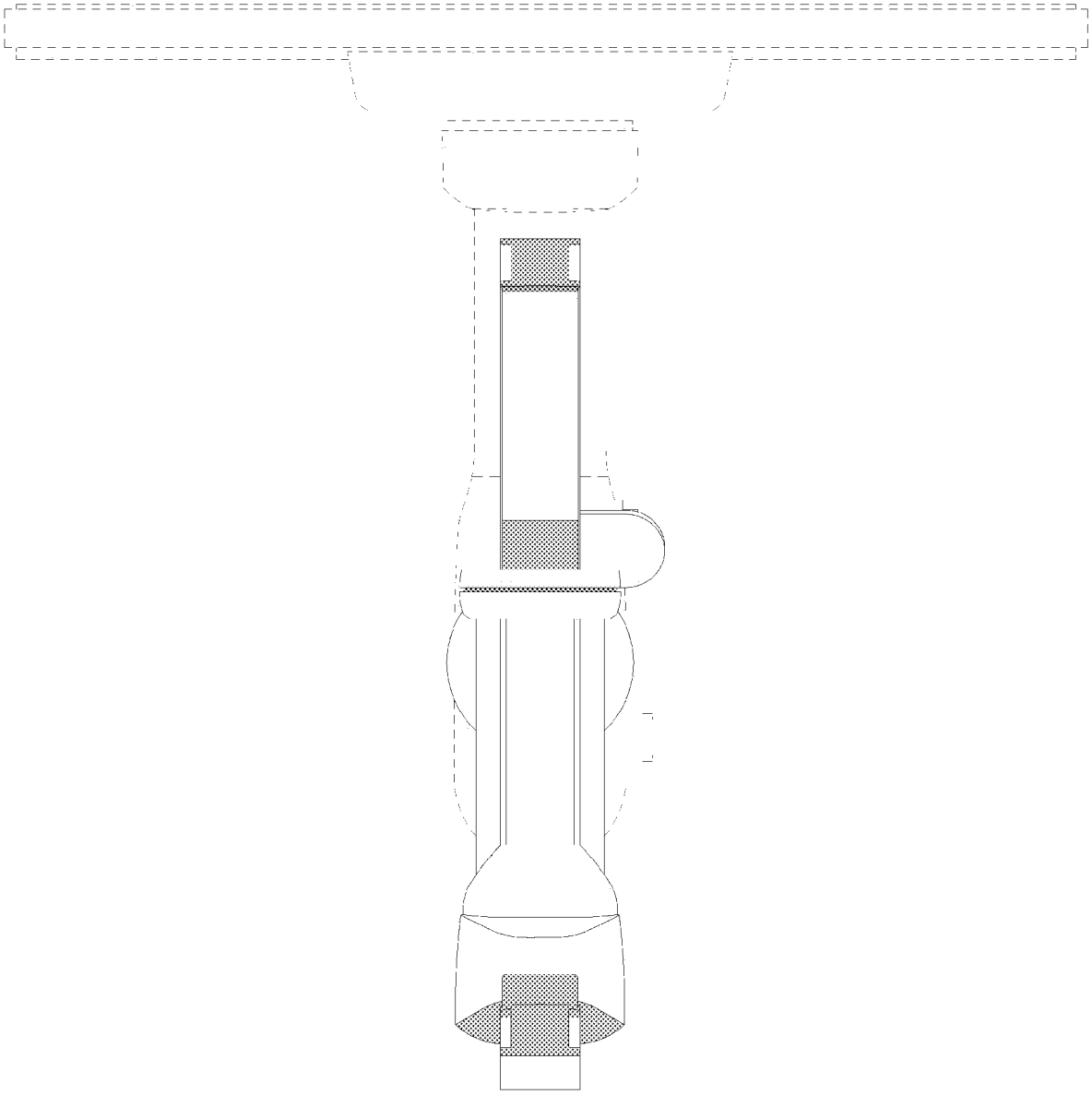

FIG. 9

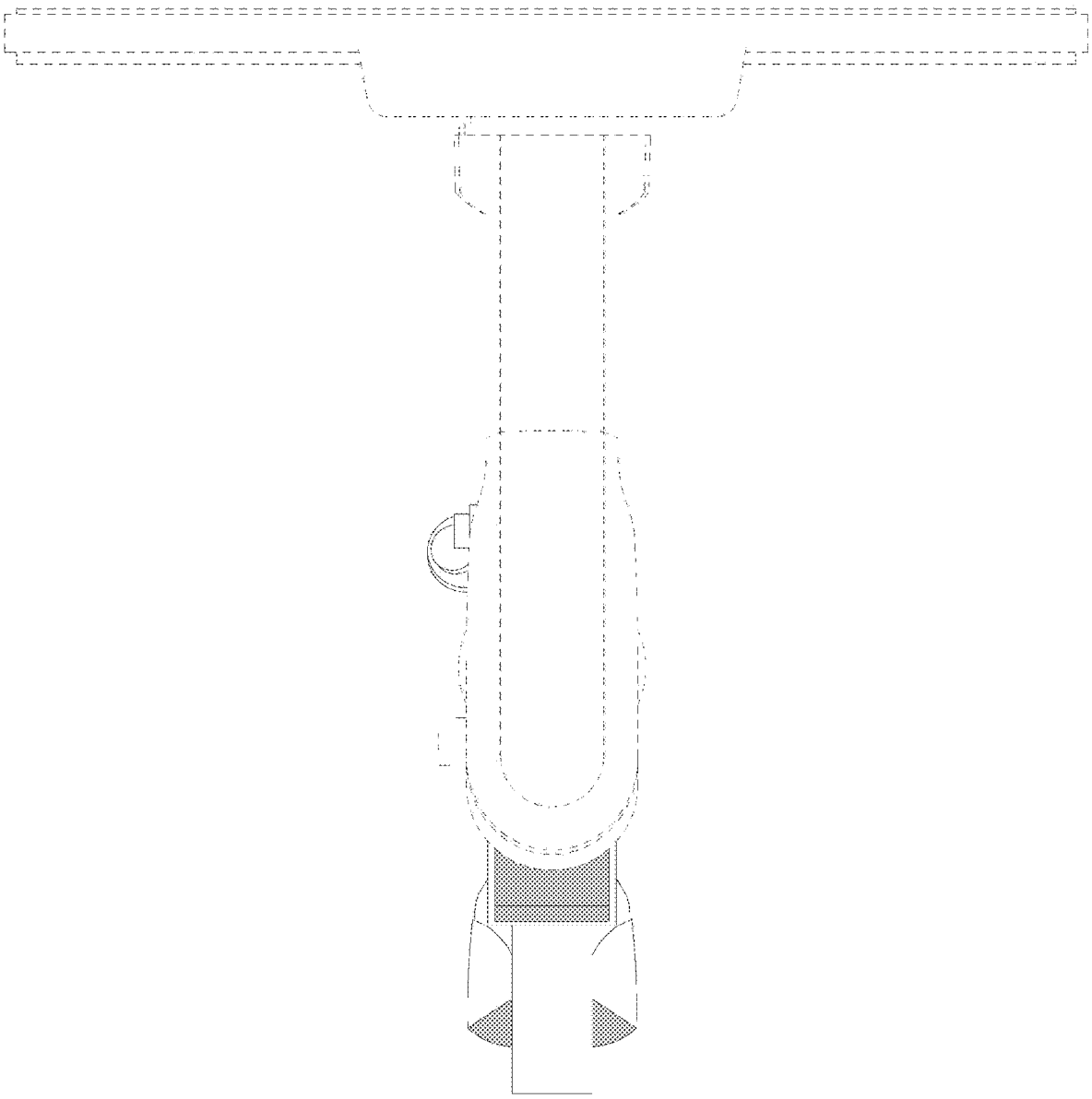

FIG. 10

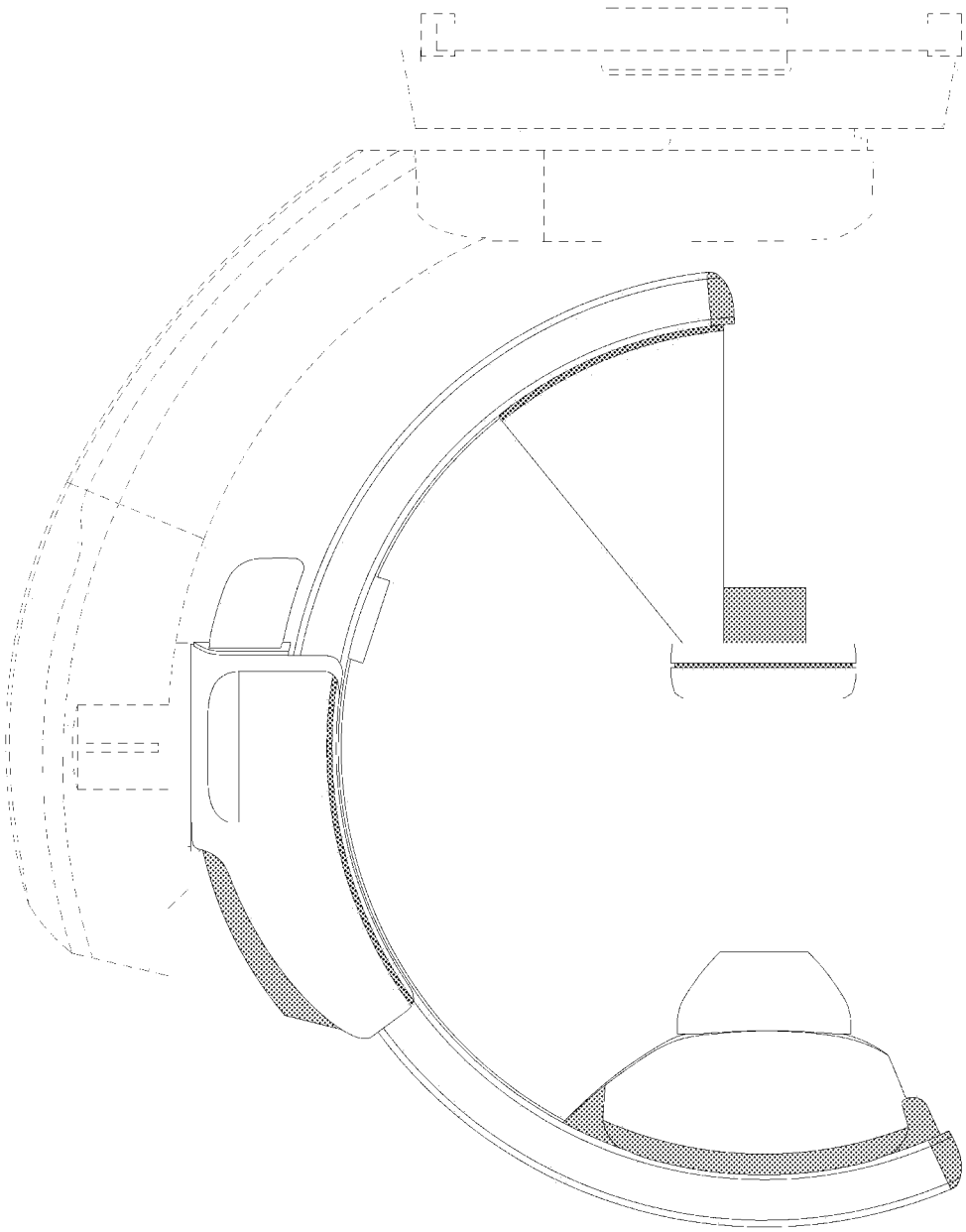

FIG. 11

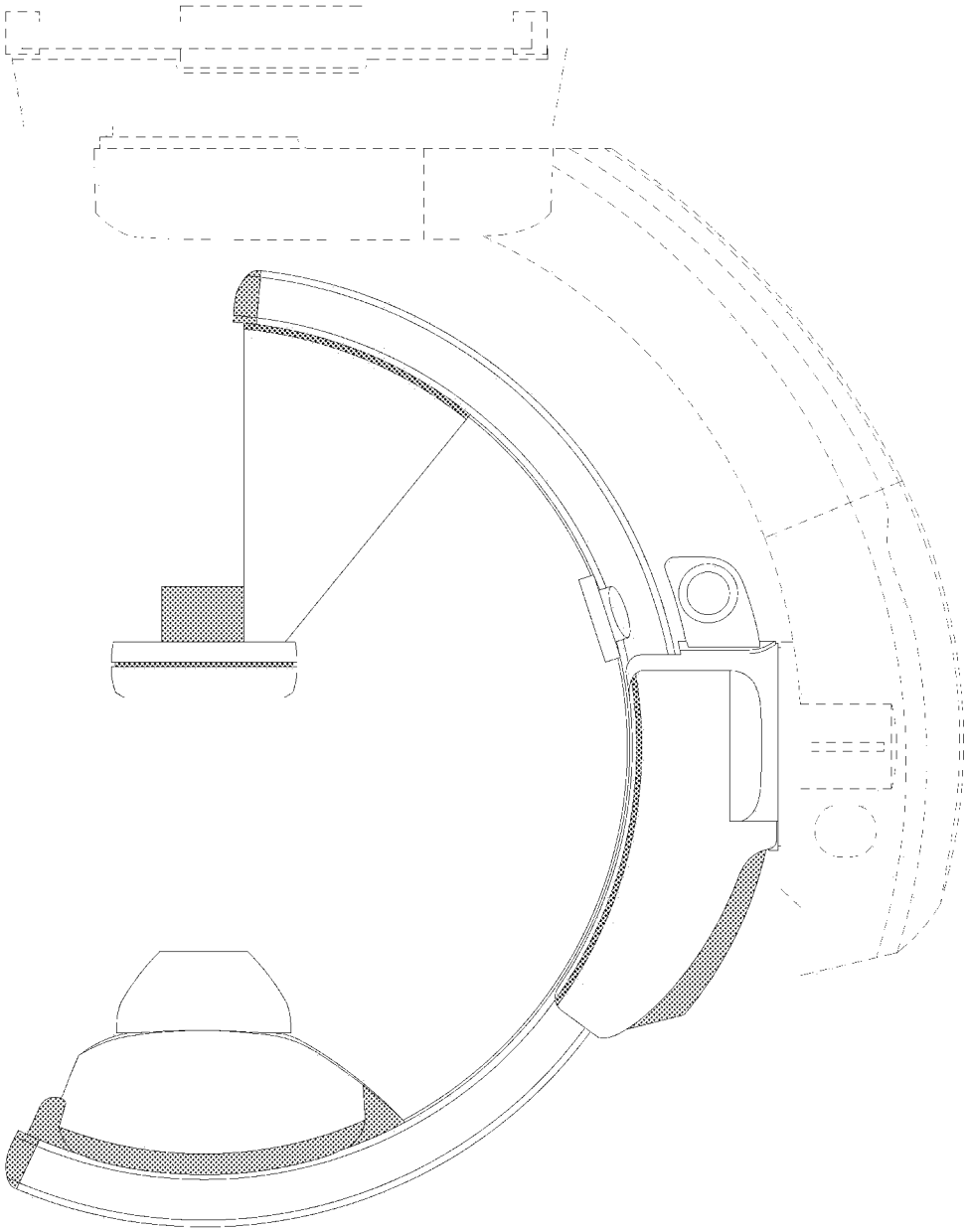

FIG. 12

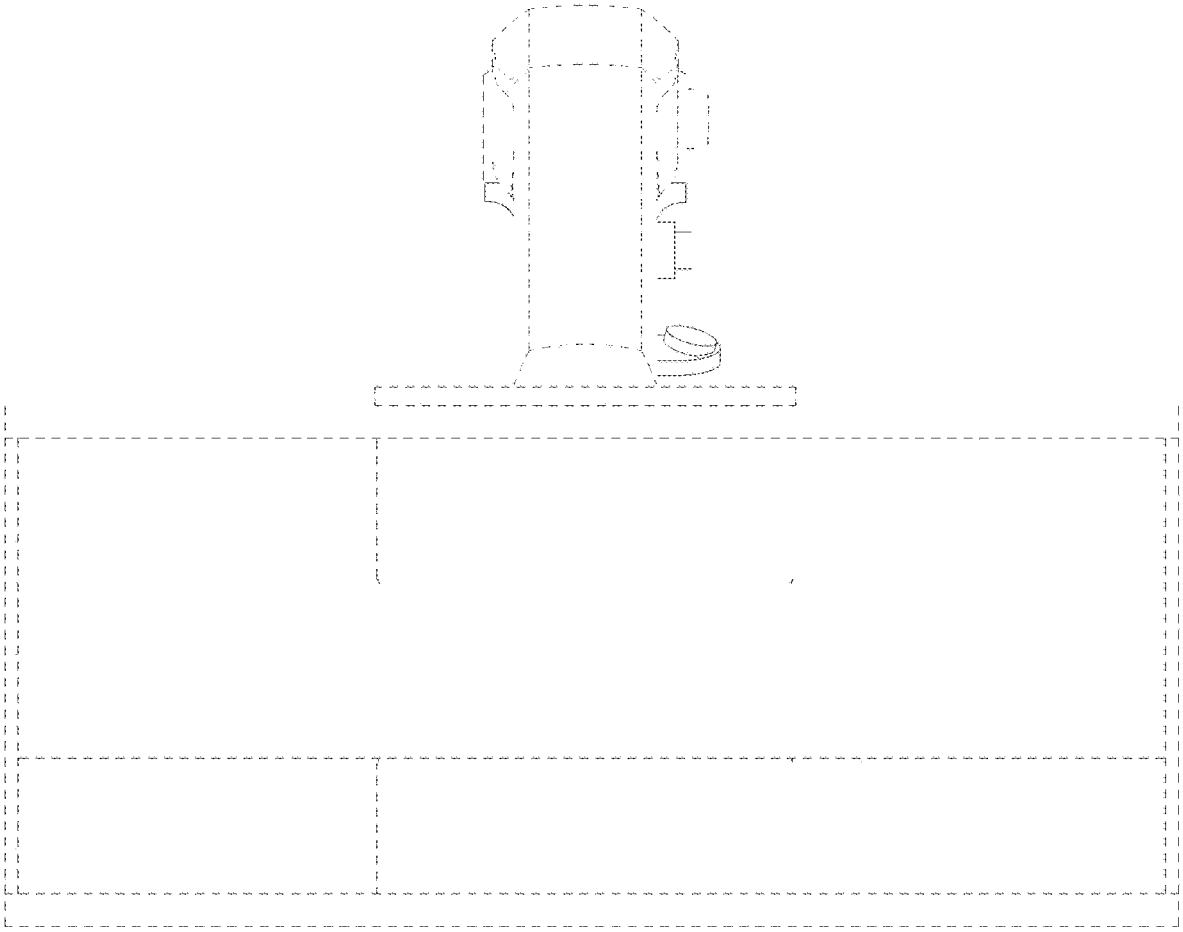

FIG. 13

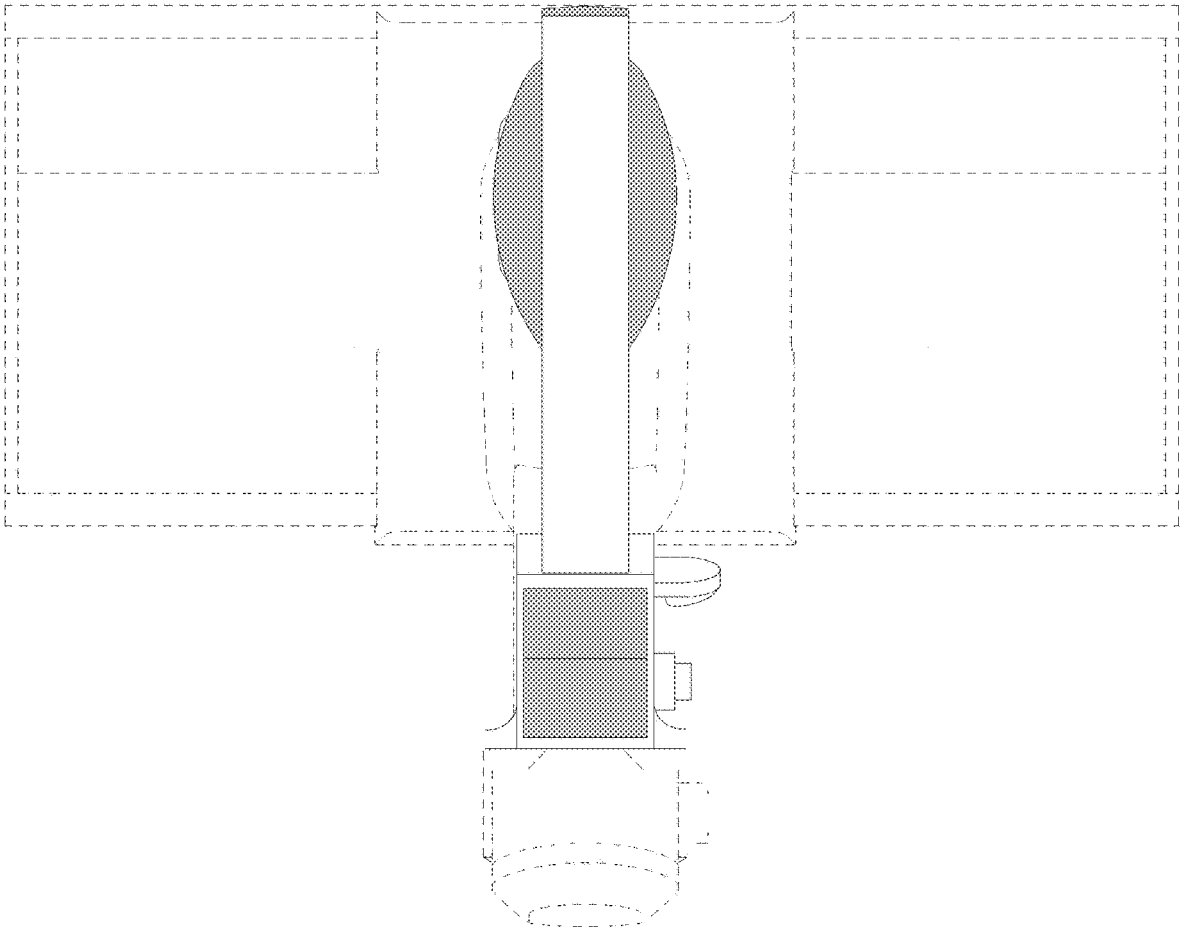

FIG. 14