(12) INTERNATIONAL APPLICATION PUBLISHED UNDER THE PATENT COOPERATION TREATY (PCT)

(19) World Intellectual Property Organization
International Bureau

(43) International Publication Date
27 September 2007 (27.09.2007)

PCT

(10) International Publication Number
WO 2007/108833 A3

(51) International Patent Classification:
*B60P 1/54* (2006.01) *B65D 88/56* (2006.01)

(21) International Application Number:
PCT/US2006/043315

(22) International Filing Date:
6 November 2006 (06.11.2006)

(25) Filing Language: English

(26) Publication Language: English

(30) Priority Data:
60/782,800 16 March 2006 (16.03.2006) US

(71) Applicant *(for all designated States except US)*: **BULL BAG, LLC** [US/US]; 55 Laura Street, New Haven, CT 06512 (US).

(72) Inventor; and

(75) Inventor/Applicant *(for US only)*: **DISPAZIO, Paul, G.** [US/US]; 85 Woodfield Road, Woodbridge, CT 06525 (US).

(74) Agent: **GETZ, Richard, D.**; O'Shea, Getz & Kosakowski, P.C., 1500 Main Street, Suite 912, Springfield, MA 01115-5227 (US).

(81) Designated States *(unless otherwise indicated, for every kind of national protection available)*: AE, AG, AL, AM, AT, AU, AZ, BA, BB, BG, BR, BW, BY, BZ, CA, CH, CN, CO, CR, CU, CZ, DE, DK, DM, DZ, EC, EE, EG, ES, FI, GB, GD, GE, GH, GM, GT, HN, HR, HU, ID, IL, IN, IS, JP, KE, KG, KM, KN, KP, KR, KZ, LA, LC, LK, LR, LS, LT, LU, LV, LY, MA, MD, MG, MK, MN, MW, MX, MY, MZ, NA, NG, NI, NO, NZ, OM, PG, PH, PL, PT, RO, RS, RU, SC, SD, SE, SG, SK, SL, SM, SV, SY, TJ, TM, TN, TR, TT, TZ, UA, UG, US, UZ, VC, VN, ZA, ZM, ZW.

(84) Designated States *(unless otherwise indicated, for every kind of regional protection available)*: ARIPO (BW, GH, GM, KE, LS, MW, MZ, NA, SD, SL, SZ, TZ, UG, ZM, ZW), Eurasian (AM, AZ, BY, KG, KZ, MD, RU, TJ, TM), European (AT, BE, BG, CH, CY, CZ, DE, DK, EE, ES, FI, FR, GB, GR, HU, IE, IS, IT, LT, LU, LV, MC, NL, PL, PT, RO, SE, SI, SK, TR), OAPI (BF, BJ, CF, CG, CI, CM, GA, GN, GQ, GW, ML, MR, NE, SN, TD, TG).

*[Continued on next page]*

(54) Title: BULK MATERIAL HANDLING SYSTEM AND APPARATUS

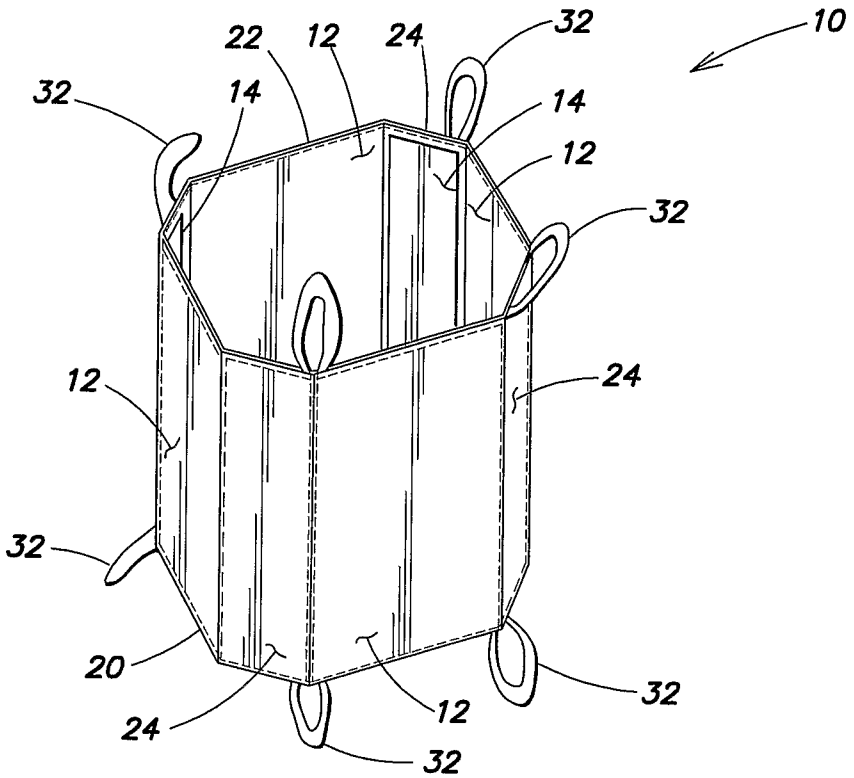


(57) Abstract: According to one aspect of the present invention, a system for handling bulk material is provided that includes one or more collapsible bags and a vehicle operable to lift and transport the collapsible bags. The bags have a side wall with a height extending between a first end and a second end, a bottom panel attached to the first end of the side wall, an opening formed by the second end of the side wall, and at least one handling member attached to the side wall adjacent the opening. According another aspect of the present invention, a method for handling bulk material between a first site and a second site, which sites are physically remote from one another, is provided that includes the steps of: a) providing a collapsible bag having at least one handling member attached to the side wall adjacent the opening; b) filling the collapsible bag with a bulk material; c) providing a vehicle operable to transport and lift the collapsible bag using the handling member; and d) transporting the collapsible bag containing the bulk material from the first to the second site.

WO 2007/108833 A3

**Published:**

— *with international search report*

— *before the expiration of the time limit for amending the claims and to be republished in the event of receipt of amendments*

**(88) Date of publication of the international search report:**
22 November 2007

*For two-letter codes and other abbreviations, refer to the "Guidance Notes on Codes and Abbreviations" appearing at the beginning of each regular issue of the PCT Gazette.*

# INTERNATIONAL SEARCH REPORT

International application No.
PCT/US06/43315

A. CLASSIFICATION OF SUBJECT MATTER
IPC: **B60P 1/54**( 2006.01);**B65D 88/56**( 2006.01)

USPC: 414/486;220/1.5
According to International Patent Classification (IPC) or to both national classification and IPC

B. FIELDS SEARCHED

Minimum documentation searched (classification system followed by classification symbols)
U.S. : 414/486; 220/1.5

Documentation searched other than minimum documentation to the extent that such documents are included in the fields searched

Electronic data base consulted during the international search (name of data base and, where practicable, search terms used)

C. DOCUMENTS CONSIDERED TO BE RELEVANT

| Category * | Citation of document, with indication, where appropriate, of the relevant passages | Relevant to claim No. |
|---|---|---|
| Y | US 6,499,610 B2 (Spitsbergen) 31 December 2002 (13.12.2006), figure 11 | 1-5 |
| Y | U.S. 4,921,195 (Clark et al.) 1 May 1990 (1.5.1990), figure 1 | 1-5 |

☐ Further documents are listed in the continuation of Box C. ☐ See patent family annex.

* Special categories of cited documents:

"A" document defining the general state of the art which is not considered to be of particular relevance

"E" earlier application or patent published on or after the international filing date

"L" document which may throw doubts on priority claim(s) or which is cited to establish the publication date of another citation or other special reason (as specified)

"O" document referring to an oral disclosure, use, exhibition or other means

"P" document published prior to the international filing date but later than the priority date claimed

"T" later document published after the international filing date or priority date and not in conflict with the application but cited to understand the principle or theory underlying the invention

"X" document of particular relevance; the claimed invention cannot be considered novel or cannot be considered to involve an inventive step when the document is taken alone

"Y" document of particular relevance; the claimed invention cannot be considered to involve an inventive step when the document is combined with one or more other such documents, such combination being obvious to a person skilled in the art

"&" document member of the same patent family

| Date of the actual completion of the international search | Date of mailing of the international search report |
|---|---|
| 09 July 2007 (09.07.2007) | 24 SEP 2007 |
| Name and mailing address of the ISA/US<br>Mail Stop PCT, Attn: ISA/US<br>Commissioner for Patents<br>P.O. Box 1450<br>Alexandria, Virginia 22313-1450<br>Facsimile No. (571) 273-3201 | Authorized officer<br>Saul Rodriguez<br>Telephone No. 571-272-6928 |

Form PCT/ISA/210 (second sheet) (April 2005)

# INTERNATIONAL SEARCH REPORT

International application No.
PCT/US06/43315

BOX III. OBSERVATIONS WHERE UNITY OF INVENTION IS LACKING

Group I, claims 1-5, drawn to the combination of a collapsible bad and a vehicle.

Group II, claims 6-16, drawn to the method of providing structure, ordering and filling an order for filled bulk bags.

Group III, claims 17-24, drawn to a collapsible bulk bag and associated details.

The inventions listed as Groups I - III do not relate to a single general inventive concept under PCT Rule 13.1 because, under PCT Rule 13.2, they lack the same or corresponding special technical features for the following reasons: While all three groups do pertain to collapsible bags, this common technical feature, however, is known in the art and therefore unity is lacking. Additionally, the special technical feature of the Group I, is the vehicle and is not present in Groups II or III. The special technical feature of the Group II is the method steps of providing structure, and ordering a bulk bag, is not present in Groups I or III. The special technical feature of the Group III are the details of the bulk bag are not present in Groups I or II. Therefore, unity of the invention is lacking.