May 1, 1934. R. FRITSCHE 1,956,917

REGISTERING DEVICE

Filed Feb. 18, 1932 2 Sheets-Sheet 1

Fig. 1.

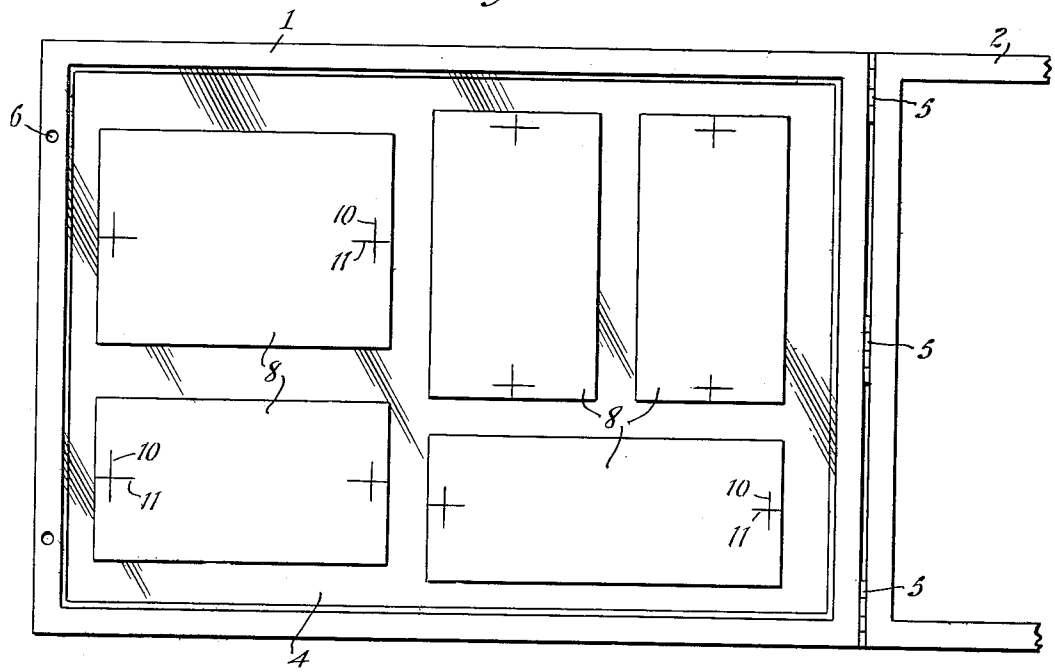


Fig. 2.

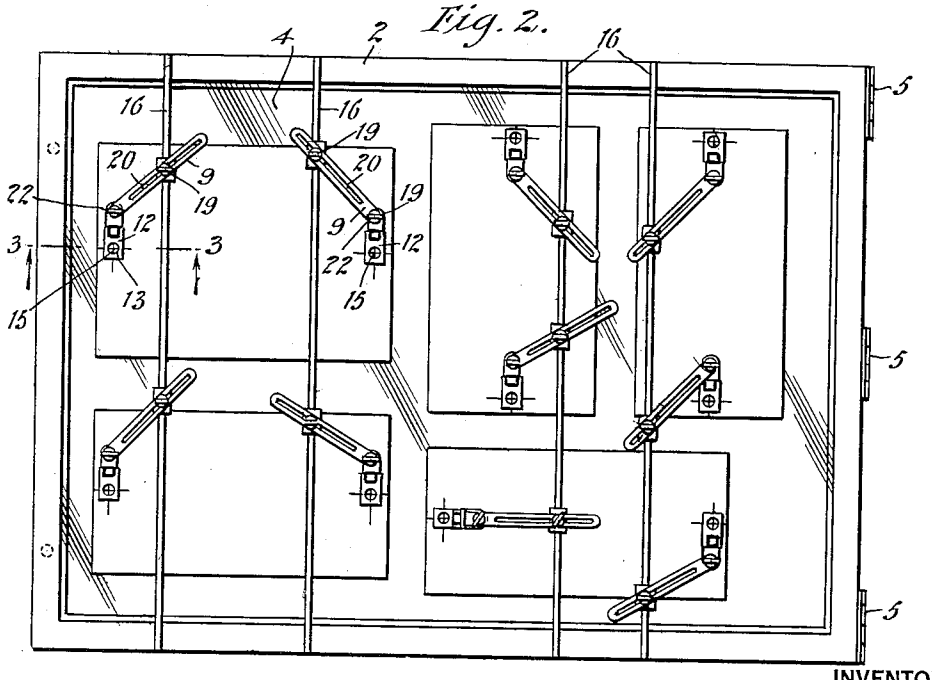


WITNESSES

Edw. Thorpe

A. L. Kitchin.

INVENTOR

Rudolf Fritsche

BY Munn & Co.

ATTORNEYS

May 1, 1934. R. FRITSCHE 1,956,917

REGISTERING DEVICE

Filed Feb. 18, 1932 2 Sheets-Sheet 2

Fig. 3.

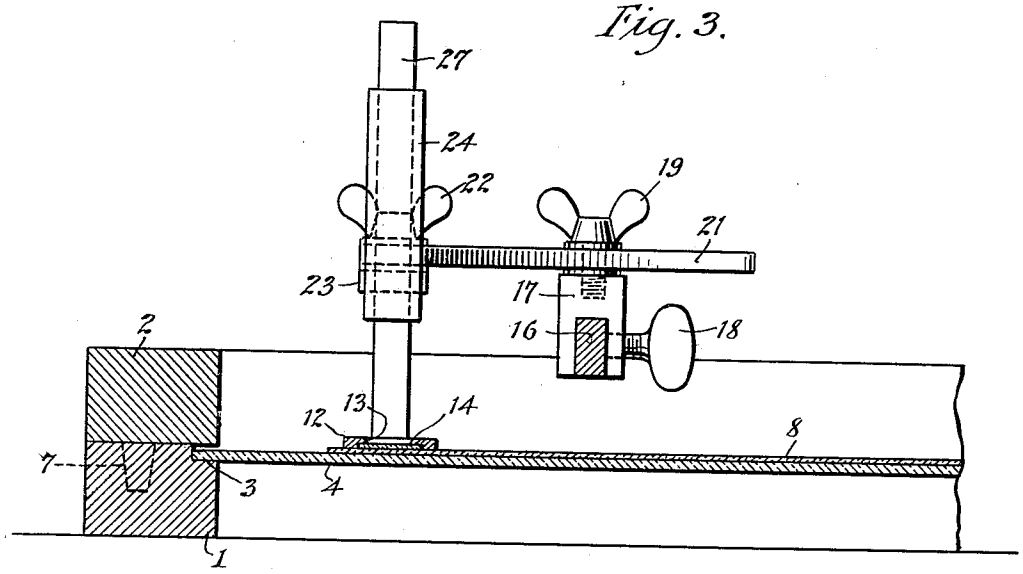


Fig. 4.

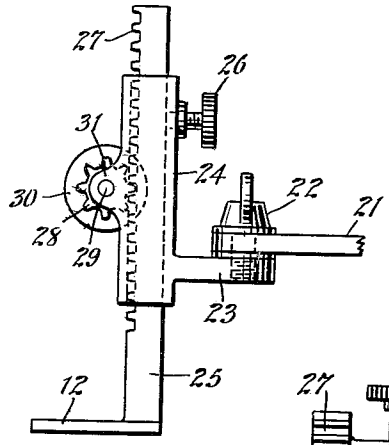


Fig. 5.

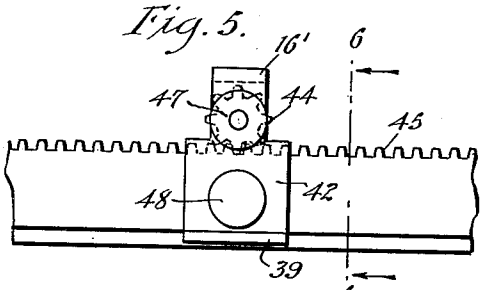


Fig. 6.

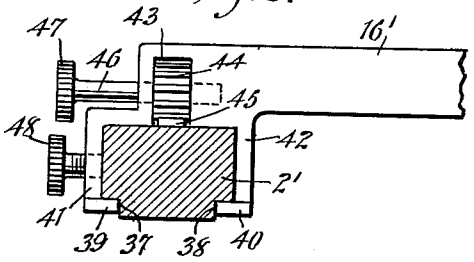


Fig. 7.

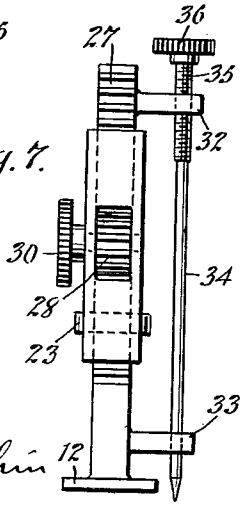


WITNESSES

Edw. Thorpe

A. L. Hitchin

INVENTOR

Rudolf Fritsche

BY Munn & Co.

ATTORNEYS

Patented May 1, 1934 1,956,917

# UNITED STATES PATENT OFFICE

1,956,917

## REGISTERING DEVICE

Rudolf Fritsche, New York, N. Y.

Application February 18, 1932, Serial No. 593,904

4 Claims. (Cl. 33—184.5)

This invention relates to registering devices used in lithographic printing, offset printing, or other forms of printing, the object being particularly in providing a construction wherein plates or other objects may be accurately lined up on different supporting members so that they will accurately register.

Another object is to provide a registering device used in color lithographing or printing wherein a plurality of photographic plates may be arranged on a glass plate or other support so that the photographic plates will all print in registry.

An additional object, more specifically, is to provide for lithographing or printing in colors wherein the structure is such that a plurality of negatives may be arranged on a glass plate in a desired order for one color, and then a similar number of negatives arranged on another plate for another color, the negatives on the second glass plate being guided to a position to exactly register with the position of the first plate, whereby when the printing operation takes place, the various colors will be deposited accurately.

In the accompanying drawings—

Figure 1 is a plan view of a device constructed according to the present invention, the top frame being swung to a fully opened position and broken away to an appreciable extent.

Figure 2 is a view similar to Figure 1 but with the top frame swung to a closed position, the same also illustrating the adjustable registering elements.

Figure 3 is an enlarged fragmentary sectional view through Figure 2 on line 3—3.

Figure 4 is an enlarged side view of the registering standard and associated parts shown in Figure 3.

Figure 5 is a fragmentary side view of a modified form of the top frame to that shown in Figure 2.

Figure 6 is a sectional view through Figure 5 on line 6—6.

Figure 7 is a view taken from the left of Figure 4 and showing a slightly modified structure wherein an adjustable pin is carried by the standard and is used for registering purposes instead of the foot.

Referring to the accompanying drawings by numerals, 1 indicates a base frame, and 2 a top frame, the base frame 1 having a notch 3 in which a plate of glass 4 is mounted. The frame 2 is hinged at 5 to frame 1 and when closed is properly centered by reason of the apertures 6 accommodating the tapering pins 7 carried by the frame 2. In case of any loose motion in the hinges 5, the pins 7 will bring the frame 2 to an accurate registry, though ordinarily, there is no loose motion in the hinges. In printing in colors, it is necessary to make printing plates and each plate is provided with a configuration for a particular color. If a picture is to be reproduced in a number of colors, there must be a plurality of plates, each plate receiving different coloring matter to produce the printing. As an example, one plate must be prepared to print only red, and when photographically securing such a negative, all other colors are screened out except red. The same is true of blue, yellow, and black. These plates or negatives are arranged in groups on a glass plate 4, as illustrated in Figures 1 and 2, and the arrangement must be absolutely accurate in order to secure proper registry when printing from the negatives, or rather from the lithographic plates produced from the negatives. To secure this result, the various negatives 8 are arranged in a desired order on the plate 4, preferably in a regular order as shown in Figure 1. After having been arranged in this manner for the first color to be used, as, for instance, red, the various plates are secured to the plate 4 by adhesive or some other desired means, so that they will not shift their relative position when the glass plate 4 with the various negatives 8 are moved to a desired position for printing on a lithographic stone or plate. Naturally, the lithographic stone or plate, when properly treated, will reproduce the negative and is used to print red. If blue is to be used, plates 8 with all colors screened therefrom except blue are applied to a second glass plate 4, which has been put into the frame 1 after the first glass plate 4 has been removed. It would be impossible for an operator to accurately position the second or blue group of negatives on the second plate 4 by his eye, but a structure, such as shown in Figure 2, will permit him to accurately place the second group of negatives, and also three or four, or more, additional groups on other plates 4, if desired.

When the first group of plates 8 have been properly secured to the first plate 4, the various registering devices 9 are brought into action. It will be noted that each of the negatives 8 is provided with two groups of cross lines, each group having a line 10 and a line 11, line 10 extending transversely and line 11 longitudinally of the negative. For each group of lines 10 and 11, there is provided a registering device 9. Each of these registering devices is provided with a foot 12 having an opening 13 therein over which a glass or other transparent plate 14 is positioned. On the

window or plate 14 are cross lines 15 which may be readily seen as a person looks through the window and sees the respective lines 10 and 11. When all of the registering members 9 are set, they are manipulated until the cross lines 15 exactly fit over the cross lines 10 and 11, with the crossing point of the respective cross lines in exact alignment. After this adjustment has been secured, the parts are locked against occidental shifting, and then the frame 2 is swung upwardly and over to the position shown in Figure 1, so that the plate 4 and the negatives carried thereby may be removed. Another plate 4 is substituted and another group of negatives is provided, namely, the group which may be known as the blue negatives because from the plate secured from these negatives blue printing will be produced. These blue negatives, so called, are arranged roughly or the nearest possible to the position shown in Figure 1, after which the frame 2 is brought back to the position shown in Figure 2. Each of the negatives is then shifted until the cross lines 10 and 11 at each end thereof are in exact registry with the cross lines of the rigidly held feet 12 on the rigidly held registering devices 9. As soon as a negative has been brought into proper registry, it is secured by some form of adhesive to the second plate 4, and then the second negative is adjusted, and so on until all of the negatives have been properly adjusted. After each adjustment, a negative is secured firmly to the second plate 4, and after all the negatives have been thus adjusted and secured, the frame 2 is again swung upwardly and out of the way, and the second plate 4 with the so-called blue negatives is removed and set aside. A third plate 4 is placed in frame 1, and then a third group of negative, as, for instance, those from which a lithographic plate designed to print yellow are used. These so-called yellow negatives are arranged roughly in the position shown in Figure 1, and then the frame 2 is moved to the position shown in Figure 2. After this has been done, the so-called yellow negatives are shifted to an accurate registry as above described, then secured in place and removed from the frame. This again is carried out until as many different colored negatives have been used as is desired. It will be understood that the negatives are actually not colored, but each negative has been produced by throwing out all the color but one, and, consequently, the lithographic plate provided by that particular negative is used for printing a particular color, as, for instance, red, blue, or yellow. By reason of the absolutely accurate positioning of the various negatives, they will cause an absolutely accurate reproduction, and the finished print to be made on paper, cloth, or other material, will have all the colors properly registering. This is true regardless of the respective sizes or shapes of the negatives. It will be, of course, understood that the picture on the negative must be in the proper proportion to the next negative of the same kind but of a different color.

The present invention is not an improvement in lithographing or other printing, but in providing means for registering negatives accurately so that any desired number of negatives may be arranged on a given glass plate and caused to accurately register so that when the finished lithograph plates are used to print, the colors will register accurately, and thereby produce perfect results as far as registration is concerned.

The various registering devices 9 may be modified in structure, but it is aimed to provide some kind of a structure whereby a more or less universal adjustment can be secured in a horizontal plane, or rather a plane parallel to the plane of the glass plate 4. As shown in the drawings, the frames 1 and 2 are preferably iron, though they could be made of some other rigid material. A number of bars 16 of iron, or other rigid material, are welded or otherwise rigidly secured to the frame 2, each bar being preferably rectangular, or substantially rectangular, in cross section. The bars 16, as shown in Figure 3, are rectangular in cross section, and the clamps 17 are constructed accordingly so that when the thumb screw 18 is loose, these clamps may slide back and forth longitudinally of the bars, or may entirely be removed therefrom. When any of the clamps 17 has been adjusted, thumb screw 18 is tightened and then the clamp is held rigidly in position. A winged screw 19 is threaded into each of the clamps 17 and extends through a slot 20, whereby the link 21 may be adjusted longitudinally, and then clamped or locked rigidly to the clamp 17. Link 21 is provided with an aperture in one end which accommodates the screw 22 which is preferably provided with a winged head, as shown in Figure 4, and set screw extending through the aperture in link 21 and into a threaded aperture in the lug or projection 23 formed integral with, or rigidly secured to the tubular member 24. When the screw 22 is screwed down tightly, the link 21 and extension or lug 23 are rigidly held together, and, consequently, the tubular member 24 is held rigidly in respect to the other parts and holds the standard 25 against shifting except upwardly or downwardly. The standard 25 is provided with the foot 12 and may be located in any desired position by a set screw 26. The standard 25 is provided with gear teeth 27 which forms a rack accommodating the teeth of the pinion 28, said pinion being rigidly secured to shaft 29 carrying a hand wheel 30. Shaft 29 is rotatably mounted on suitable ears 31 extending from the tubular member 32. By manipulating the thumb or hand wheel 30, the standard 25 may be raised or lowered, and when in use is lowered until it is in contact with the negative 8 or almost in contact therewith. After having been properly set, the standard is locked by set screw 26 and when so locked is left in this position until all of the negatives have been properly brought into registry. This is true, of course, of each of the registering devices 9.

A modified form is shown in Figure 7, said modified form being identical to that shown in Figure 4, except for the lugs or ears 32 and 33 and the pin 34. Lug 33 is provided with a smooth aperture through which the lower part of pin 34 slides, while lug 32 is provided with a larger and threaded aperture for accommodating the threads 35, whereby whenever the wheel or hand member 36 is rotated, the pin 34 will be raised or lowered. This construction is preferable where the printing is to be done from steel, copper, or other metal plates, but is not used where negatives are used. When the registering device is brought into the first registering position, the point of pin 34 is lowered until it is almost in contact with the particular identification mark on the plate and is left in this position as the successive plates are placed in position, so that the successive plates will be exactly registered with the first plate.

Instead of having the bars 16 rigidly secured to the frame 2, as shown in Figure 2, they may be made separate and adjustably positioned on

the frame, as illustrated in Figures 5 and 6. In these two figures, one of the side bars of the frame is shown, the same being indicated by numeral 2', because instead of being rectangular in cross section as shown in Figure 3, it is provided with notches 37 and 38, which receive the underhanging plates 39 and 40 rigidly secured in any manner to the depending webs 41 and 42, preferably formed integral with the cross bar 16'. It is, of course, evident that these depending webs could be made separate and rigidly secured in place instead of being formed integral, as shown in Figure 6. In addition, the bar 16' is provided with a notch 43 which accommodates the pinion 44, which pinion continually meshes with rack 45, either formed integral with the frame 2' or rigidly secured thereto by screws, welding, or otherwise. A shaft 46 extends into suitable bearing openings and is rigidly secured to the pinion 44, said shaft carrying a hand wheel 47, whereby whenever the hand wheel 47 is rotated, the bar 16' will be moved longitudinally of the frame 2'. When bar 16' has been moved to a desired position, the thumb screw 48 is tightened and the parts locked rigidly to the frame 2'. If desired, a rack 45 could be provided on each of the side bars of the frame 2', but, ordinarily, one rack is sufficient, but it is desirable that a set screw 48 be arranged at each end of each bar 16' so as to rigidly clamp the bar against accidental movement. Whether using the bar 16 as shown in Figure 2 or the bar 16' as shown in Figure 5 or 6, the structure must be held rigidly in a given position in respect to the frame 2 before the registering members 9 are set. After the registering members have been set, all parts are rigidly held against accidental shifting, and, consequently, as the frame 2 is opened and closed, there will be no shifting of any parts, and each succeeding group of negatives will be caused to properly register with the preceding group.

I claim:—

1. A registering device for negatives or other members comprising a frame adapted to receive a supporting plate, said supporting plate being adapted to receive a number of negatives or other members, each negative or other member having a registering mark thereon, a swinging frame hingedly connected with the first mentioned frame and adapted to be swung down against the first mentioned frame and away from the second mentioned frame, cross bars rigidly secured to the swinging frame and registering members carried by each cross bar, each registering member including a sliding clamp engaging the cross bar, a swinging and reciprocating link carried by the clamp, means for rigidly locking the link to the clamp, a swinging registering foot carried by the end of said link and means for rigidly locking the foot against swinging movement.

2. In a registering device of the character described, a frame and a plurality of registering devices carried by said frame, each of said registering devices including a swinging link structure, means for locking the link structure against swinging, a reciprocating standard swingingly carried by each link structure, means for locking the standard against reciprocation, and a foot carried by a standard, said foot having a transparent window formed with centering markings thereon.

3. In a registering device of the character described, a frame for receiving a glass plate, a second frame hingedly connected to the first mentioned frame, a plurality of cross bars carried by said second frame, a plurality of links slidably and pivotally connected to each of said cross bars, means for locking said links against independent movement, a bracket swingably connected to each of said links, a reciprocating standard carried by each of said brackets, means for locking the standard in different positions and a registering member carried by said standard, said member including a foot having a window provided with markings thereon.

4. In a registering device of the character described, a frame for receiving a glass plate, a second frame hingedly connected to the first frame, said second frame being of substantially the same size as the first frame, a plurality of cross bars rigidly secured to said second frame, each of said cross bars being substantially rectangular in cross section, a plurality of substantially U-shaped clamps slidably mounted on each of said cross bars, a clamping screw for rigidly clamping each of the U-shaped clamps to a cross bar, a link mounted on top of each of said clamps, a thumb operated screw extending through each of the links for rigidly clamping the links at different adjusted positions to the clamps, a tubular member having an extension, a thumb operated screw extending through said link and into said extension for pivotally mounting said tubular member on the end of said link and also for permitting a swinging movement thereof in the same plane as the swinging movement of the link, a standard mounted to slide in said tubular member, said standard having at the lower end a frame provided with a window having centering marks thereon, means for causing said standard to reciprocate in said tubular member, and means for locking said standard against reciprocation.

RUDOLF FRITSCHE.