J. A. MISLAND.

ELECTRIC REGULATING DEVICE.

APPLICATION FILED SEPT. 9, 1916.

1,232,451.

Patented July 3, 1917.

2 SHEETS—SHEET 1.

Fig. 1,

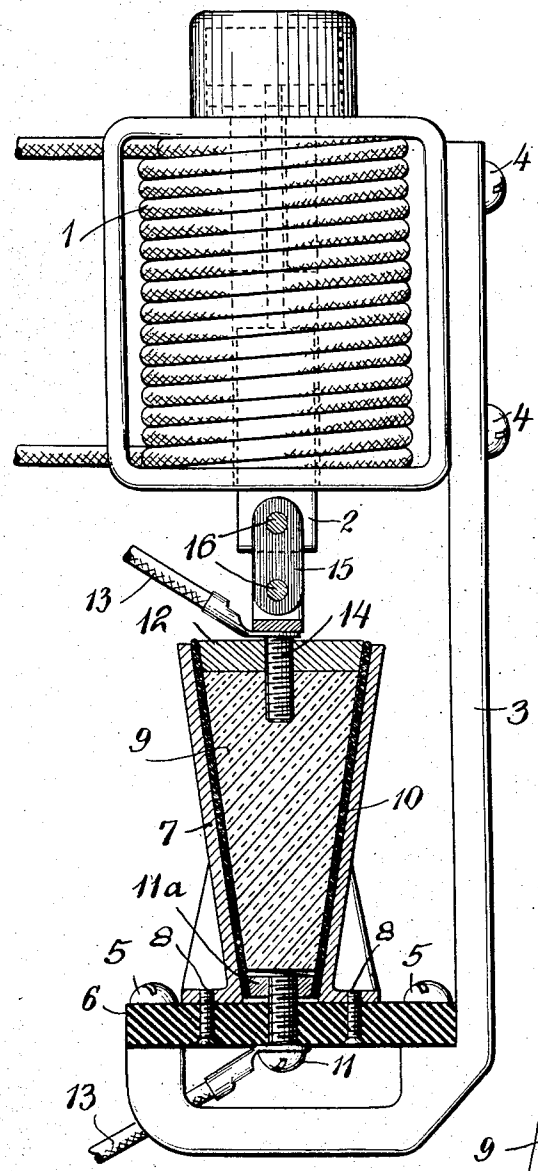

Fig. 2

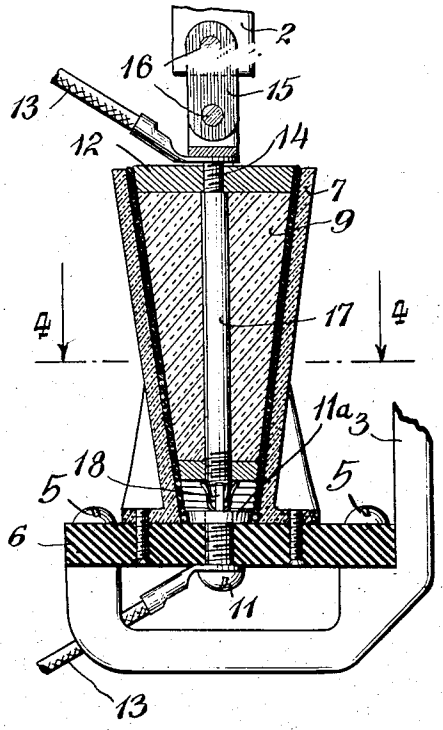

Fig. 4,

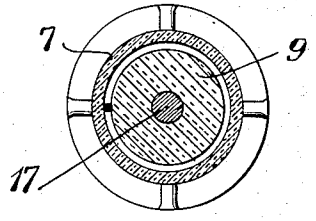

Fig. 3,

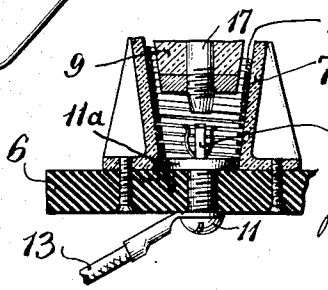

INVENTOR

Joseph A. Misland,

BY

Pennie, Davis & Marvin,

ATTORNEYS

J. A. MISLAND.

ELECTRIC REGULATING DEVICE.

APPLICATION FILED SEPT. 9, 1916.

1,232,451.

Patented July 3, 1917.

2 SHEETS—SHEET 2.

Fig. 5,

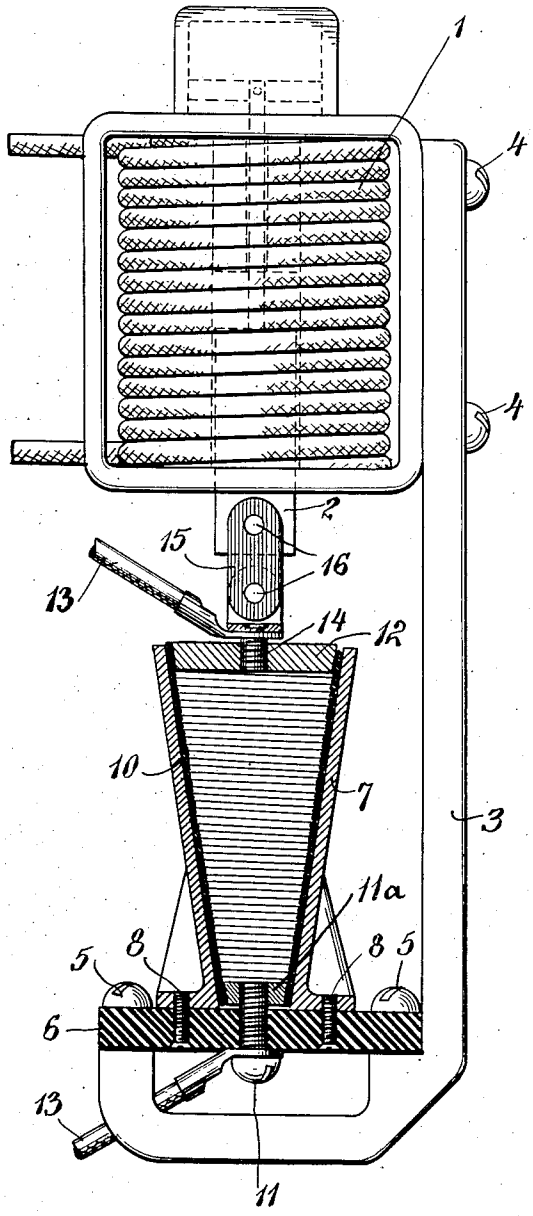

Fig. 6,

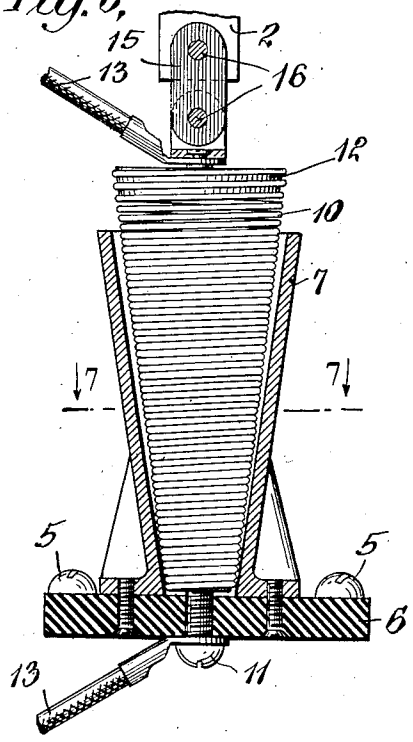

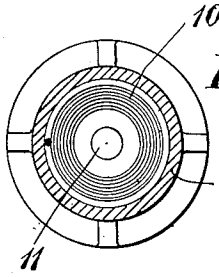

Fig. 7,

INVENTOR

Joseph A. Misland,

BY

Pennie, Davis & Marvin

ATTORNEYS.

UNITED STATES PATENT OFFICE.

JOSEPH A. MISLAND, OF BAYONNE, NEW JERSEY.

ELECTRIC REGULATING DEVICE.

1,232,451. Specification of Letters Patent. Patented July 3, 1917.

Application filed September 9, 1916. Serial No. 119,172.

To all whom it may concern:

Be it known that I, JOSEPH A. MISLAND, a citizen of the United States, residing in Bayonne, county of Hudson, State of New Jersey, have invented certain new and useful Improvements in Electric Regulating Devices; and I do hereby declare the following to be a full, clear, and exact description of the invention, such as will enable others skilled in the art to which it appertains to make and use the same.

This invention relates to electric regulating devices, and particularly to those in which the amount of resistance may be varied gradually throughout a wide range by means of extensible coils without interrupting any electrical circuit and without employing a sliding or other moving contact, thereby providing a simple and durable device suitable for use for either manual or automatic operation in a great variety of places and under severe operating conditions.

Heretofore, in devices of this kind the extensible resistance wire was improperly supported or entirely unsupported so that the adjacent extended convolutions often came into contact, while adjacent contracted convolutions shifted their points of contact or became entirely separated due to vibration, shock or magnetic effects. Also, the pressure at the points of contact continually varied so that the electrical resistance thereof also varied. Due to this mechanical instability, the resistance offered to the electric current was materially altered when such alteration was not intended and the regulation was unsatisfactory in many of the applications of the device.

These objections are overcome in my invention by providing improved means of support for the extensible coil, and if desired, an improved form of cross-section of wire for the purpose.

In the accompanying drawings which show various embodiments of my invention, Figure 1 is an elevation of a solenoid and a sectional elevation of a resistance element having an outer conducting support and an inner insulating support;

Fig. 2 shows a resistance element having both outer and inner insulating supports and a short circuiting device;

Fig. 3 shows the short-circuiting device of Fig. 2 in an extended position of the resistance winding;

Fig. 4 is a horizontal section of the resistance element of Fig. 2 on the line 4—4;

Fig. 5 is an elevation of the solenoid and a sectional elevation of a resistance element with an outer conducting support and no inner support;

Fig. 6 is a sectional elevation of the resistance element of Fig. 5, partially extended; Fig. 7 is a horizontal section on the line 7—7 of Fig. 6.

The solenoid has a winding 1 suitably connected in an electric circuit and a plunger 2, all in accordance with well known construction. A frame 3 holds the solenoid and the resistance together as a unit by means of the screws 4 and 5.

The resistance element has a ninsulating base 6 to which is attached by screws 8, the outer support 7 of insulating or conducting material for the purpose of supporting the resistance winding. If desired I may also provide an interior support 9 of insulating or conducting material.

The resistance winding consists of continuous uninsulated wire 10, of suitable electrical and mechanical properties, coiled in conformity with the shape of the supports and soldered or otherwise mechanically connected at one end to the conducting plate 11^a, which is fastened to the base by the terminal screw 11, and at the other to the conducting carrier 12 which with the inner support 9, if one is provided, is fastened to the plunger 2 by the screw 14, insulating link 15, and screws 16. The resistance is connected in the electrical circuit to be regulated by the wires 13. In some cases I prefer to use a resistance wire having a cross section in the form of a parallelogram, either rectangular or oblique, whereby the surfaces of contact between adjacent contracted coils are considerably increased. As the plunger is pulled up some of the adjacent convolutions of the winding are drawn apart and away from the outer and inner supports, so that the supports, if conducting, short circuit fewer turns, and further so that the main electrical path is around some of the convolutions instead of across them. In this way the resistance is gradually increased throughout as wide a range as desired. Similarly, when the plunger lowers,

the adjacent convolutions are successively laid in contact with each other and in contact with the supports, so that the resistance is gradually decreased to its minimum value.

When I provide insulated support or supports for the resistance winding, I may further provide a short circuiting device comprising a conducting rod 17, permanently connected to one terminal, and a clip 18 connected to the other terminal, so that when the coil is fully contracted the rod enters the clip and short circuits the entire resistance winding.

In the preferable embodiment of my invention, I use frustrated cones for the outer and inner supports and place the resistance coil, of a shape in conformity therewith, within the outer support. If I provide an inner support, either or both supports may be of conducting or of insulating material. In Fig. 1, I show an inner insulating support and a conducting outer support, while in Fig. 2 both of them are insulating. In Figs. 5 and 6, I omit the inner support and show an outer conducting support, although the latter may also be insulating and the resistance element provided, if desired, with the short circuiting device illustrated in Fig. 2.

In the fully contracted position, the adjacent convolutions throughout the resistance winding are in contact with each other and with the exterior support, and also in contact with the interior support, if one is provided. If either or both supports are conducting, the winding is short-circuited thereby, whereas if the supports are insulating, the winding is short-circuited by rod 17 and clips 18 contacting therewith. Consequently the main electrical path, under this condition, does not include the contacts between adjacent convolutions, and the resistance of the element is practically negligible.

As the relatively movable carrier 14 is pulled up, either by hand or by a mechanical device such as a solenoid or motor, those convolutions of least contractile strength are gradually separated from each other, while the same or other convolutions are simultaneously pulled away from the support or supports. Therefore the number of turns short-circuited by the support or supports, if conducting, gradually decreases and the number short-circuited on themselves also gradually decreases. In this way the main electrical path gradually includes more and more of the resistance winding, so that the resistance of the element gradually increases. If the supports are insulating, the short circuiting path is, upon extension from the fully contracted position, immediately interrupted at 18, and the resistance is gradually increased as a result of the gradual separation of the adjacent convolutions. In the fully extended position of the carrier, all convolutions are separated from each other and from the supports, so that the maximum resistance is then included in the electrical circuit to be regulated.

As the carrier is lowered in position, the adjacent convolutions are gradually laid in contact with each other and with the supports, so that the resistance gradually decreases in a manner the reverse of that during extension.

I find that the rate of increase of the resistance, as the coil is extended, may be varied by changing the contractile force of the convolutions. If the convolutions are tight, so that the adjacent coils tend to remain in contact with each other, the separation of the convolutions will be comparatively rapid, and the consequent increase of the resistance will be correspondingly rapid; whereas if the convolutions lie loosely together, the increase of the resistance will be more gradual. Furthermore, the contractile force of the individual convolutions may be made different by employing wire of differing cross section or differing hardness so that the pull required varies at different positions of the carrier.

As will be understood by those skilled in the art, the resistance elements may be used alone or in any number, and they may be connected either in series or parallel, or a combination of the two, as the demands of the particular service required of them may suggest.

Having thus described my invention, what I claim is:

1. An electrical resistance device comprising a coil of uninsulated wire, an outer surrounding support, and a relatively movable carrier, the ends of said coil being respectively attached to said support and said carrier.

2. An electrical resistance device, comprising a coil of uninsulated wire, an outer conical surrounding support, and a relatively movable carrier, the ends of said coil being respectively attached to said support and said carrier.

3. An electrical resistance device comprising an outer support and an uninsulated conducting wire coiled within said support in such manner that the convolutions may be separately brought into and out of contact with each other by a relatively movable carrier to which one end of said coil is attached.

4. An electrical resistance device comprising a coil of uninsulated wire, an outer insulating support, a conducting member, and a relatively movable carrier, the ends of said coil being respectively attached to said member and said carrier.

5. An electrical resistance comprising a

coil of uninsulated wire, an outer support, a relatively movable inner support of insulating material, a conducting member associated with said inner support, the ends of said coil being respectively attached to said outer support and said member.

6. An electrical resistance comprising a coil of uninsulated wire, an outer insulating support, a conducting member associated therewith, a relatively movable inner support of insulating material, a conducting member associated therewith, the ends of said coil being respectively attached to said conducting members.

7. An electrical resistance device comprising a coil of uninsulated wire, an outer insulating support, a conducting member associated therewith, a relatively movable inner insulating support, a conducting member associated therewith, the ends of said coil being respectively attached to said conducting members, and means associated with said conducting members for short-circuiting said coil when the same is in the fully contracted position.

8. An electrical resistance device comprising a coil of uninsulated wire, an outer surrounding support and a relatively movable inner support, the ends of said coil being respectively attached to said supports, and a solenoid plunger attached to one of said supports.

9. An electrical resistance device comprising a coil of uninsulated wire, an outer insulating support, a conducting member associated therewith, a relatively movable inner support of insulating material, a conducting member associated therewith, the terminals of said coil being respectively attached to said conducting members, a solenoid plunger attached to one of said supports, and contacts associated with said conducting members for short-circuiting said coil when the resistance element is in the fully contracted position.

10. An electrical resistance device comprising a coil of uninsulated wire, an outer insulating support, a conducting member associated therewith, to which one end of said coil is attached, a relatively movable inner support of insulating material, a conducting member associated therewith to which the other end of said coil is attached, a spring contact associated with said first named conducting member, a conducting rod passing through said inner support attached to the conducting member associated therewith and extending beyond the opposite end of said support and adapted to engage said spring contact when said coil is in its fully contracted position to short-circuit said coil.

In testimony whereof I affix my signature.

JOSEPH A. MISLAND.