Office de la Propriété Intellectuelle du Canada
Un organisme d'Industrie Canada

Canadian Intellectual Property Office
An agency of Industry Canada

CA 2569440 A1 2006/09/08

(21) 2 569 440

(12) DEMANDE DE BREVET CANADIEN
CANADIAN PATENT APPLICATION

(13) A1

(86) Date de dépôt PCT/PCT Filing Date: 2005/05/26
(87) Date publication PCT/PCT Publication Date: 2006/09/08
(85) Entrée phase nationale/National Entry: 2006/12/01
(86) N° demande PCT/PCT Application No.: US 2005/018874
(87) N° publication PCT/PCT Publication No.: 2006/093508
(30) Priorités/Priorities: 2004/06/01 (US60/576,364); 2004/08/11 (US60/600,867); 2004/09/17 (US60/610,802); 2005/02/18 (US60/654,354); 2005/04/25 (US11/115,075); 2005/04/25 (US11/115,101); 2005/04/25 (US11/115,100)

(51) Cl.Int./Int.Cl. *G06K 9/00* (2006.01), *G06K 9/46* (2006.01)

(71) Demandeur/Applicant:
LUMIDIGM, INC., US

(72) Inventeurs/Inventors:
ROWE, ROBERT K., US;
CORCORAN, STEPHEN P., US

(74) Agent: BENNETT JONES LLP

(54) Titre : BIOMETRIE PAR IMAGERIE SPECTRALE
(54) Title: MULTISPECTRAL IMAGING BIOMETRICS

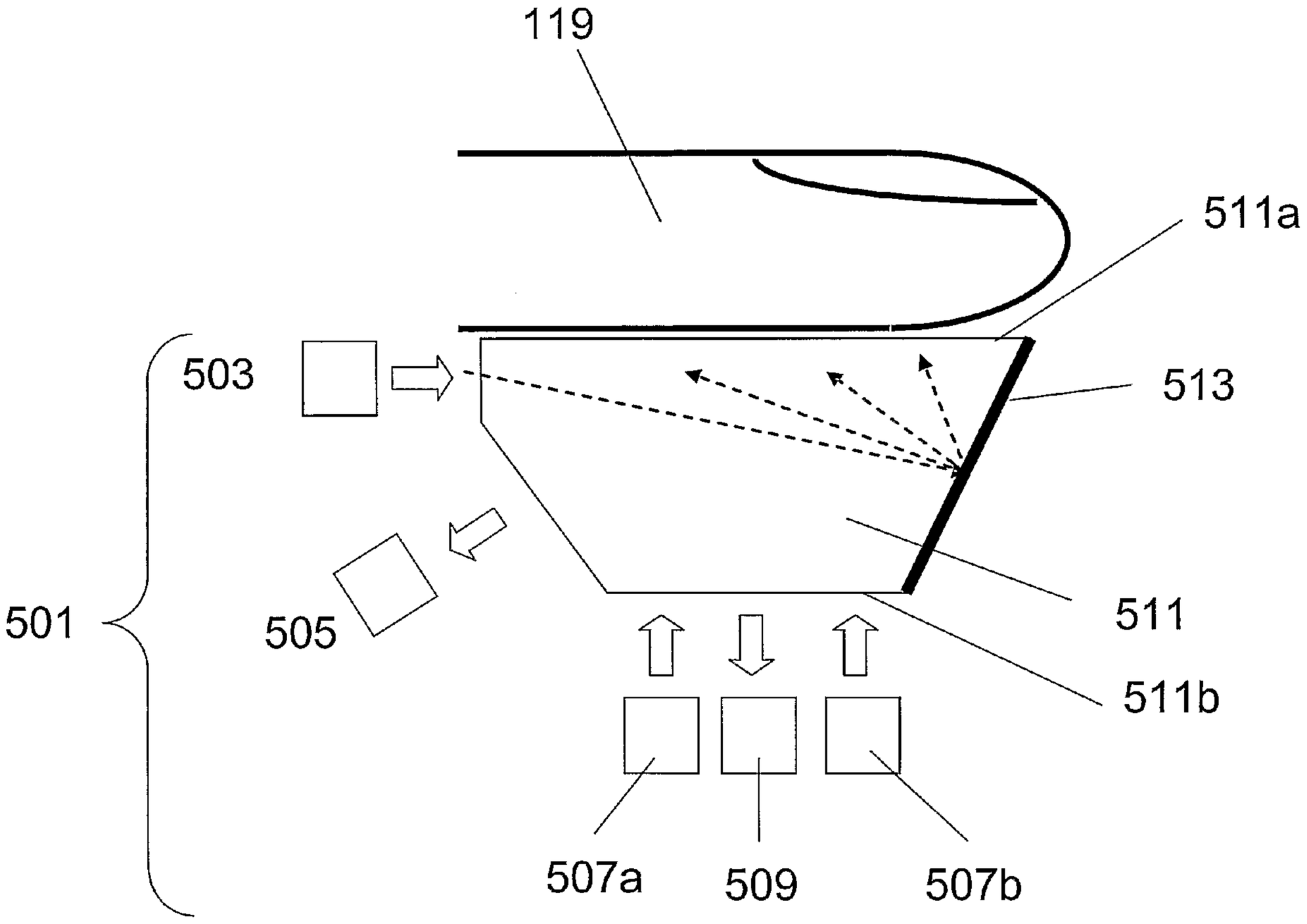

(57) Abrégé/Abstract:
Methods and systems are provided for performing a biometric measurement on an individual. A purported skin site of the individual is illuminated under a plurality of distinct optical conditions during a single illumination session. Light scattered beneath a surface of the purported skin site is received separately for each of the plurality of distinct optical conditions. A multispectral image of the purported skin site is derived from the received light. A biometric function is performed with the derived multispectral image.

(12) INTERNATIONAL APPLICATION PUBLISHED UNDER THE PATENT COOPERATION TREATY (PCT)

(19) World Intellectual Property Organization
International Bureau

(43) International Publication Date
8 September 2006 (08.09.2006)

PCT

(10) International Publication Number
WO 2006/093508 A2

(51) International Patent Classification:
G06K 9/00 (2006.01) *G06K 9/46* (2006.01)

(21) International Application Number:
PCT/US2005/018874

(22) International Filing Date: 26 May 2005 (26.05.2005)

(25) Filing Language: English

(26) Publication Language: English

(30) Priority Data:

60/576,364	1 June 2004 (01.06.2004)	US
60/600,867	11 August 2004 (11.08.2004)	US
60/610,802	17 September 2004 (17.09.2004)	US
60/654,354	18 February 2005 (18.02.2005)	US
11/115,075	25 April 2005 (25.04.2005)	US
11/115,100	25 April 2005 (25.04.2005)	US
11/115,101	25 April 2005 (25.04.2005)	US

(71) Applicant *(for all designated States except US)*: **LUMIDIGM, INC.** [US/US]; Suite 213, 800 Bradbury Southeast, Albuquerque, NM 87106 (US).

(72) Inventors; and

(75) Inventors/Applicants *(for US only)*: **ROWE, Robert, K.** [US/US]; 229 Ashley Lane, Corrales, NM 87048 (US). **CORCORAN, Stephen, P.** [US/US]; 437 Alamos Road, Corrales, NM 87048 (US).

(74) Agents: **BOUCHER, Patrick** et al.; Townsend and Townsend and Crew LLP, 8th Floor, Two Embarcadero Center, San Francisco, CA 94111-3834 (US).

(81) Designated States *(unless otherwise indicated, for every kind of national protection available)*: AE, AG, AL, AM, AT, AU, AZ, BA, BB, BG, BR, BW, BY, BZ, CA, CH, CN, CO, CR, CU, CZ, DE, DK, DM, DZ, EC, EE, EG, ES, FI, GB, GD, GE, GH, GM, HR, HU, ID, IL, IN, IS, JP, KE, KG, KM, KP, KR, KZ, LC, LK, LR, LS, LT, LU, LV, MA, MD, MG, MK, MN, MW, MX, MZ, NA, NG, NI, NO, NZ, OM, PG, PH, PL, PT, RO, RU, SC, SD, SE, SG, SK, SL, SM, SY, TJ, TM, TN, TR, TT, TZ, UA, UG, US, UZ, VC, VN, YU, ZA, ZM, ZW.

(84) Designated States *(unless otherwise indicated, for every kind of regional protection available)*: ARIPO (BW, GH, GM, KE, LS, MW, MZ, NA, SD, SL, SZ, TZ, UG, ZM, ZW), Eurasian (AM, AZ, BY, KG, KZ, MD, RU, TJ, TM), European (AT, BE, BG, CH, CY, CZ, DE, DK, EE, ES, FI, FR, GB, GR, HU, IE, IS, IT, LT, LU, MC, NL, PL, PT, RO, SE, SI, SK, TR), OAPI (BF, BJ, CF, CG, CI, CM, GA, GN, GQ, GW, ML, MR, NE, SN, TD, TG).

[Continued on next page]

(54) Title: MULTISPECTRAL IMAGING BIOMETRICS

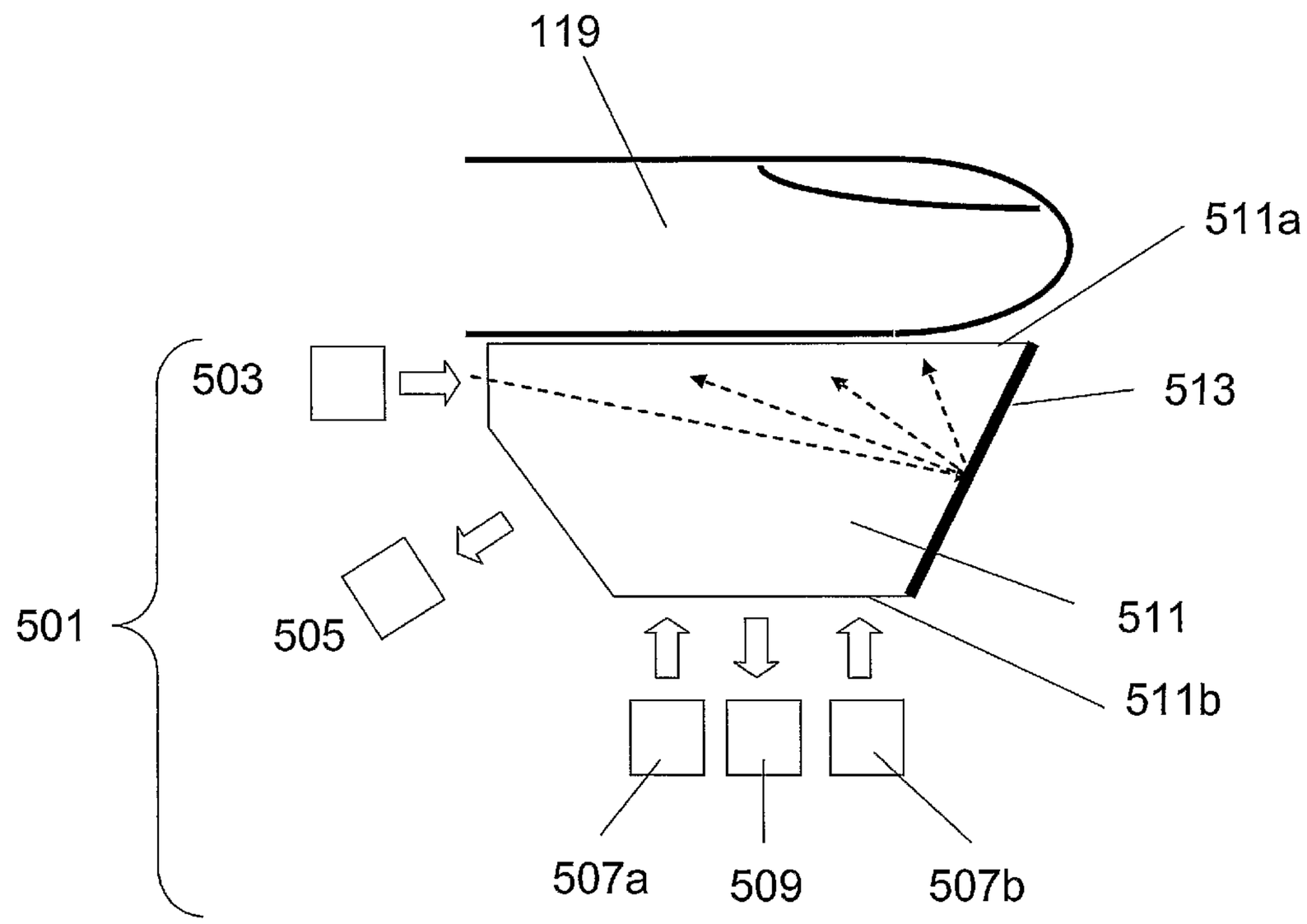

(57) Abstract: Methods and systems are provided for performing a biometric measurement on an individual. A purported skin site of the individual is illuminated under a plurality of distinct optical conditions during a single illumination session. Light scattered beneath a surface of the purported skin site is received separately for each of the plurality of distinct optical conditions. A multispectral image of the purported skin site is derived from the received light. A biometric function is performed with the derived multispectral image.

WO 2006/093508 A2

WO 2006/093508 A2

Published:

— *without international search report and to be republished upon receipt of that report*

For two-letter codes and other abbreviations, refer to the "Guidance Notes on Codes and Abbreviations" appearing at the beginning of each regular issue of the PCT Gazette.

MULTISPECTRAL IMAGING BIOMETRICS

CROSS-REFERENCES TO RELATED APPLICATIONS

[0001] This application is a nonprovisional of, and claims the benefit of the filing date of each of the following applications: U.S. Prov. Pat. Appl. No. 60/576,364, entitled "MULTISPECTRAL FINGER RECOGNITION," filed June 1, 2004 by Robert K. Rowe and Stephen P. Corcoran; U.S. Prov. Pat. Appl. No. 60/600,867, entitled "MULTISPECTRAL IMAGING BIOMETRIC," filed August 11, 2004 by Robert K. Rowe; U.S. Prov. Pat. Appl. No. 60/610,802, entitled "FINGERPRINT SPOOF DETECTION USING MULTISPECTRAL IMAGING," filed September 17, 2004 by Robert K. Rowe; U.S. Prov. Pat. Appl. No. 60/654,354, entitled "SYSTEMS AND METHODS FOR MULTISPECTRAL FINGERPRINT SENSING," filed February 18, 2005 by Robert K. Rowe; and U.S. Prov. Pat. Appl. No. 60/659,024, entitled "MULTISPECTRAL IMAGING OF THE FINGER FOR BIOMETRICS," filed March 4, 2005 by Robert K. Rowe *et al.*

[0002] This application is related to commonly assigned U.S. Pat. Appl. No. 11/009,372, entitled "METHODS AND SYSTEMS FOR ESTIMATION OF PERSONAL CHARACTERISTICS FROM BIOMETRIC MEASUREMENTS," filed December 9, 2004 by Robert K. Rowe, the entire disclosure of which is incorporated herein by reference for all purposes.

STATEMENT AS TO RIGHTS TO INVENTIONS MADE UNDER FEDERALLY SPONSORED RESEARCH OR DEVELOPMENT

[0003] The U.S. Government has rights in this application as supported by the Air Force Research Laboratory, Rome, NY under Contract No. FA8750-04-C-0190.

BACKGROUND OF THE INVENTION

[0004] This application relates generally to biometrics. More specifically, this application relates to multispectral imaging biometrics.

[0005] "Biometrics" refers generally to the statistical analysis of characteristics of living bodies. One category of biometrics includes "biometric identification," which commonly operates under one of two modes to provide automatic identification of people or to verify purported identities of people. Biometric sensing technologies measure the physical features or behavioral characteristics of a person and compare those features to similar prerecorded measurements to determine whether there is a match. Physical features that are commonly used for biometric identification include faces, irises, hand geometry, vein structure, and fingerprint patterns, which is the most prevalent of all biometric-identification features. Current methods for analyzing collected fingerprints include optical, capacitive, radio-frequency, thermal, ultrasonic, and several other less common techniques.

[0006] Most of the fingerprint-collection methods rely on measuring characteristics of the skin at or very near the surface of a finger. In particular, optical fingerprint readers typically rely on the presence or absence of a difference in the index of refraction between the sensor platen and the finger placed on it. When the angle of light at an interface is greater than the critical angle and an air-filled valley of the fingerprint is present at a particular location of the platen, total internal reflectance ("TIR") occurs in the platen because of the air-platen index difference. Alternatively, if skin of the proper index of refraction is in optical contact with the platen, the TIR at this location is "frustrated," allowing light to traverse the platen-skin interface. A map of the differences in TIR across the region where the finger is touching the platen forms the basis for a conventional optical fingerprint reading. There are a number of optical arrangements used to detect this variation of the optical interface in both bright-field and dark-field optical arrangements. Commonly, a single quasimonochromatic beam of light is used to perform this TIR-based measurement.

[0007] There also exists non-TIR optical fingerprint sensors. Some non-TIR contact sensors rely on some arrangement of quasimonochromatic light to illuminate the front, sides, or back of a fingertip, causing the light to diffuse through the skin. The fingerprint image is formed because of the differences in light transmission through the finger and across the skin-platen interface for the ridge and valleys. The difference in optical transmission at the interface is due to changes in the Fresnel reflection characteristics that result from the presence or absence of intermediate air gaps in the valleys. Some non-TIR sensors are non-contact sensors, which use polarized light to image the surface features of the finger. In some

cases the imaging system may include a linear polarizer and the illumination light may be polarized in parallel and perpendicular directions to provide two images, which are then combined in some manner to enhance the surface features of the finger.

[0008] Although optical fingerprint readers based on TIR phenomena are one of the most commonly deployed types of fingerprint sensors, they are susceptible to image-quality problems due to non-ideal conditions. If the skin is overly dry, the index match with the platen will be compromised, resulting in poor image contrast. Similarly, if the finger is very wet, the valleys may fill with water, causing an optical coupling to occur all across the fingerprint region and greatly reduce image contrast. Similar effects may occur if the pressure of the finger on the platen is too little or too great, the skin or sensor is dirty, the skin is aged and/or worn, or overly fine features are present such as may be the case for certain ethnic groups and in very young children. These effects decrease image quality and thereby decrease the overall performance of the fingerprint sensor. In one recent study, 16% of fingerprint images were found to be of suboptimal image quality as a result of these effects. In some cases, commercial optical fingerprint readers incorporate a thin membrane of soft material such as silicone to help mitigate some of these effects and restore performance. As a soft material, the membrane is subject to damage, wear, and contamination, limiting the use of the sensor before it requires maintenance.

[0009] Biometric sensors, particularly fingerprint biometric sensors, are generally prone to being defeated by various forms of spoof samples. In the case of fingerprint readers, a variety of methods are known in the art for presenting readers with a fingerprint pattern of an authorized user that is embedded in some kind of inanimate material such as paper, gelatin, epoxy, latex, or the like. Thus, even if a fingerprint reader can be considered to reliably determine the presence or absence of a matching fingerprint pattern, it is also critical to the overall system security to ensure that the matching pattern is being acquired from a genuine, living finger, which is difficult to ascertain with many existing sensors.

[0010] There is accordingly a general need in the art for improved methods and systems for biometric sensing.

BRIEF SUMMARY OF THE INVENTION

[0011] Embodiments of the invention provide methods of performing a biometric measurement on an individual. A purported skin site of the individual is illuminated under a plurality of distinct optical conditions during a single illumination session. Light scattered beneath a surface of the purported skin site is received separately for each of the plurality of distinct optical conditions. A multispectral image of the purported skin site is derived from the received light. A biometric function is performed with the derived multispectral image.

[0012] A number of different biometric functions may be performed in different embodiments. In one embodiment, performing the biometric function comprises verifying an identity of the individual. In a further embodiment, performing the biometric function comprises comparing the multispectral image with a plurality of multispectral images stored in a database relating the plurality of multispectral images to identities of people. The individual is identified by finding a match between the multispectral image and one of the plurality of multispectral images stored in the database. In another embodiment, performing the biometric function comprises comparing the multispectral image with a plurality of non-multispectral images stored in a database relating the plurality of non-multispectral images to identities of people. The individual is identified by finding a correspondence between the multispectral image and one of the plurality of non-multispectral images stored in the database. For example, the database may comprise values derived from the non-multispectral images, in which case the multispectral image may be compared with the plurality of non-multispectral images by extracting features from the multispectral image and comparing the features with the values.

[0013] A number of different of characteristics may also be used in generating the plurality of distinct optical conditions. For example, in one embodiment, the plurality of distinct optical conditions comprise distinct polarization conditions. In another embodiment, the plurality of distinct wavelengths of illumination light. In such an embodiment, the purported skin site of the individual may be simultaneously illuminated with illumination at a plurality of distinct wavelengths, perhaps in the form of a continuum of wavelengths, and the scattered light filtered to separate the plurality of distinct wavelengths.

[0014] Polarization may also be used to ensure that detected light has undergone multiple scatter events. For example, the purported skin site may be illuminated with light

having a first polarization for each of the distinct optical conditions. The received light may be polarized with a second polarization, with the first and second polarizations substantially defining a cross-polarization condition. The first and second polarizations could each be linear polarization or could each be circular polarizations in different embodiments.

[0015] In one embodiment, an image of surface structure of the skin site may also be collected. For instance, the skin site may be illuminated with light from within the platen at an angle greater than a critical angle defined by an interface of the platen with an environment external to the platen, with the surface structure corresponding to portions of the skin site in contact with the platen. A position of the purported skin site may be substantially unchanged during the single illumination session.

[0016] Another set of embodiments provide a multispectral sensor. A platen is adapted for placement of a purported skin site by an individual. An illumination source is disposed to illuminate the purported skin site when placed on the platen. An imaging system is disposed to receive light scattered beneath a surface of the purported skin site. A controller is interfaced with the illumination source and the imaging system. The controller includes instructions to illuminate the purported skin site with the illumination source under a plurality of distinct optical conditions during a single illumination session in which a position of the purported skin site on the platen is substantially unchanged. The controller also includes instructions to derive a multispectral image of the purported skin site from light received by the imaging system separately for each of the plurality of optical conditions. A biometric function is performed with the derived multispectral image. The multispectral sensor may sometimes be conveniently comprised by a portable electronic device.

[0017] Several embodiments use polarization. In one such embodiment, the multispectral sensor further comprises a first polarizer disposed to polarize the light provided by the illumination source. The imaging system comprises a second polarizer disposed to polarize the light scattered beneath the surface of the skin site. The plurality of optical conditions comprise distinct relative polarization conditions. In another such embodiment, the multispectral sensor also further comprises a first polarizer disposed to polarize the light provided by the illumination source and a second polarizer disposed to polarize the light scattered beneath the surface of the skin site. The first and second polarizers may be provided in a crossed configuration.

[0018] In some embodiments, the imaging system comprises a color filter array having a plurality of distributed filter elements. Each filter element is adapted to transmit light of one of a limited number of specified narrowband wavelength ranges. The plurality of distinct optical conditions comprise distinct wavelengths of illumination light within the specified narrowband wavelength ranges. In one such embodiment, the instructions to illuminate the purported skin site with the illumination source under the plurality of distinct optical conditions comprise instructions to illuminate the purported skin site with different wavelengths sequentially. In another such embodiment, the instructions to illuminate the purported skin site with the illumination source under the plurality of distinct optical conditions comprise instructions to illuminate the purported skin site with the plurality of wavelengths simultaneously.

[0019] In another embodiment, the controller further includes instructions to illuminate the skin site with light from within the platen at an angle greater than a critical angle defined by an interface of the platen with an environment external to the platen. An image is derived of surface structure of the skin site from light incident on the interface of the platen where the skin site is in contact with the platen.

[0020] In a further set of embodiments, a method is provided of analyzing a tissue site. Light scattered from the tissue site is received under first and second distinct polarization conditions during a single illumination session in which a position of the tissue site is substantially unchanged. The second polarization condition does not define a complementary state relative to the first polarization condition. An image of the tissue site is derived from the received light.

[0021] At least one of the first and second polarization conditions may comprise a substantially random polarization condition. Receiving light scattered from the tissue site under one of the first and second distinct polarization conditions may comprise illuminating the tissue site with light having a first polarization and detecting light having the first polarization scattered from the tissue site. Alternatively, the tissue site may be illuminated with light having a first polarization and light having a second polarization complementary to the first polarization scattered from the tissue site may be detected. The image of the tissue site may be derived by deriving a first image of the tissue site from light received for the first polarization condition and deriving a second image of the tissue site from light received for the second polarization condition. A linear combination may then be performed of the first

and second images. In some embodiments, a biometric function may be performed with the derived image.

[0022] Embodiments of the invention also provide a method of performing a biometric measurement on an individual. A purported skin site of the individual disposed relative to a platen is illuminated under a plurality of distinct optical conditions during a single illumination session. At least one of the plurality of distinct optical conditions includes illuminating the purported skin site with light at an angle greater than a critical angle defined by an interface of the platen with an external environment. At least another of the distinct optical conditions includes illuminating the purported skin site with light at an angle less than the critical angle. Light scattered from the purported skin site is received separately for each of multiple of the plurality of distinct optical conditions to derive a multispectral image of the purported skin site.

[0023] In one embodiment, portions of the purported skin site are in contact with the platen. In such an embodiment, light received after scattering from the purported skin site may comprise light received after scattering from positions where the light incident on the purported skin site at the angle greater than the critical angle coincides with positions where the purported skin site in contact with the interface to derive an image of surface structure of the purported skin site.

[0024] In different embodiments, the multiple distinct optical conditions might comprise distinct polarization conditions, distinct illumination angles, and/or might comprise distinct wavelengths of illumination light. In one embodiment, the platen comprises a thickness of material; illuminating the purported skin site with light at the angle greater than the critical angle comprises reflecting the light multiple times through total internal reflectance within the thickness of material before passing through the interface of the platen onto the skin site. In another embodiment, the light received under each of the multiple optical conditions is received by the same light detector. Alternatively, light scattered under the at least one of the plurality of distinct optical conditions may be received with a first imager and light scattered under the other of the distinct optical conditions may be received with a second imager different from the first imager. The light scattered under the at least one of the plurality of distinct optical conditions may be received under dark-field or bright-field configurations in different embodiments. A position of the purported skin site may be substantially unchanged during the single illumination session.

[0025] Another set of embodiments provides a biometric measurement system. The biometric measurement system comprises a platen, an illumination source, a light detector, and a controller. The platen is adapted for placement of a purported skin site by an individual. The controller is interfaced with the illumination source and the light detector. The controller includes instructions to illuminate the purported skin site under a plurality of distinct optical conditions during a single illumination session in which a position of the purported skin site is substantially unchanged. At least one of the plurality of distinct optical conditions includes illuminating the purported skin site with light at an angle greater than a critical angle defined by an interface of the platen with an external environment. Another of the distinct optical conditions includes illuminating the purported skin site with light at an angle less than the critical angle. The controller also includes instructions to derive a multispectral image of the purported skin site from light received by the light detector after scattering from the purported skin site for each of multiple of the plurality of distinct optical conditions. In some instances, the biometric measurement system is conveniently comprised by a portable electronic device or may be comprised by a turnstile.

[0026] In several embodiments, the platen comprises a first thickness of material. The illumination source is disposed to illuminate the purported skin site with light at the angle greater than the critical angle by reflecting the light multiple times through total internal reflectance within the first thickness of material before passing through the interface onto the skin site. The platen may sometimes comprise a second thickness of material through which the light scattered from beneath the surface of the purported skin site is propagated before being incident on the purported skin site. The second thickness of material may include a hole disposed relative to the light detector such that the light scattered from beneath the surface of the purported skin site propagates through the hole to the light detector. The first and second thickness of material may be separated by a thickness of the external environment. In some instances, the illumination source may comprise a first illumination source disposed within the first thickness of material and/or a second illumination source disposed within the second thickness of material.

[0027] In different embodiments, the multiple distinct optical conditions might comprise distinct polarization conditions, distinct illumination angles, and/or distinct wavelengths of illumination light. In one embodiment, the light detector comprises an optical axis oriented at an angle less than the critical angle. For example, the optical axis may be oriented substantially normal to the interface.

[0028] The controller may also sometimes include instructions to perform a biometric function with the derived multispectral image and derived image of surface structure of the skin site. For example, the biometric function might comprise verifying an identity of the individual.

[0029] Further embodiments of the invention provide methods of determining a liveness state of purported tissue. The purported tissue is illuminated under a plurality of distinct optical conditions during a single illumination session. Light scattered from the purported tissue is received separately for each of the plurality of distinct optical conditions. A multispectral image of the purported tissue is derived from the received light. It is verified that the derived multispectral image is consistent with living tissue.

[0030] In some embodiments, the purported tissue is presented by a person, and an identity of the person is verified from the multispectral image. A number of different of characteristics may also be used in generating the plurality of distinct optical conditions. For example, in different embodiments, the plurality of distinct optical conditions may comprise distinct polarization conditions, distinct illumination angles, and/or distinct wavelengths of illumination light. In one embodiment that uses distinct wavelengths of illumination light, the purported tissue is illuminated simultaneously with illumination at a plurality of distinct wavelengths and the light scattered from the purported tissue is received separately for each of the plurality of distinct optical conditions by filtering the scattered light to separate the distinct wavelengths. In alternative embodiments, the purported tissue may be illuminated sequentially under the distinct optical conditions.

[0031] Polarization may also be used to ensure that detected light has undergone multiple scatter events. For example, the purported tissue may be illuminated with light having a first polarization for each of the distinct optical conditions. The received light may be polarized with a second polarization, with the first and second polarizations substantially defining a cross-polarization condition. The first and second polarizations could each be linear polarization or could each be circular polarizations in different embodiments.

[0032] The light scattered from the purported tissue may comprise light scattered from beneath a surface of the purported tissue. In one embodiment, an image of surface structure of the purported tissue may also be collected. For instance, the purported tissue may be illuminated with light from within the platen at an angle greater than a critical angle defined by an interface of the platen with an environment external to the platen, with the

surface structure corresponding to portions of the purported tissue in contact with the platen. A position of the purported tissue may be substantially unchanged during the single illumination session.

[0033] Another set of embodiments provide a liveness detector. A platen is adapted for placement of purported tissue. An illumination source is disposed to illuminate the purported tissue when placed on the platen. An imaging system is disposed to receive light scattered from the purported tissue. A controller is interfaced with the illumination source and the imaging system. The controller includes instructions to illuminate the purported tissue with the illumination source under a plurality of distinct optical conditions during a single illumination session in which a position of the purported tissue on the platen is substantially unchanged. The controller also includes instructions to derive a multispectral image of the purported tissue from light received by the imaging system separately for each of the plurality of optical conditions. Controller instructions are provided to verify that the derived multispectral image is consistent with living tissue.

[0034] Several embodiments use polarization. In one such embodiment, the liveness detector further comprises a first polarizer disposed to polarize the light provided by the illumination source. The imaging system comprises a second polarizer disposed to polarize the light scattered from the purported tissue. The plurality of optical conditions comprise distinct relative polarization conditions. In another such embodiment, the liveness detector also further comprises a first polarizer disposed to polarize the light provided by the illumination source and a second polarizer disposed to polarize the light scattered from the purported tissue. The first and second polarizers may be provided in a crossed configuration.

[0035] In some embodiments, the imaging system comprises a color filter array having a plurality of distributed filter elements. Each filter element is adapted to transmit light of one of a limited number of specified narrowband wavelength ranges. The plurality of distinct optical conditions comprise distinct wavelengths of illumination light within the specified narrowband wavelength ranges. In one such embodiment, the instructions to illuminate the purported tissue with the illumination source under the plurality of distinct optical conditions comprise instructions to illuminate the purported tissue with different wavelengths sequentially.

[0036] In another embodiment, the controller further includes instructions to illuminate the purported tissue with light from within the platen at an angle greater than a

critical angle defined by an interface of the platen with an environment external to the platen. An image is derived of surface structure of the purported tissue from light incident on the interface of the platen where the purported tissue is in contact with the platen.

BRIEF DESCRIPTION OF THE DRAWINGS

[0037] A further understanding of the nature and advantages of the present invention may be realized by reference to the remaining portions of the specification and the drawings wherein like reference labels are used through the several drawings to refer to similar components. In some instances, reference labels include a numerical portion followed by a latin-letter suffix; reference to only the numerical portion of reference labels is intended to refer collectively to all reference labels that have that numerical portion but different latin-letter suffices.

[0038] The patent or application file contains at least one drawing executed in color. Copies of this patent or patent application publication with color drawings will be provided by the Office upon request and payment of the necessary fee.

[0039] Fig. 1 provides a front view of a multispectral biometric sensor in one embodiment of the invention;

[0040] Figs. 2A – 2D provide four views of a multispectral biometric sensor shown in another embodiment of the invention;

[0041] Fig. 3A shows an embodiment of the invention that incorporates total-internal-reflectance illumination, multispectral-imaging illumination, and an optical prism;

[0042] Fig. 3B shows an embodiment of the invention that incorporates a slab platen for total-internal-reflectance illumination and a separate mechanism for direct-imaging illumination;

[0043] Fig. 3C shows an embodiment of the invention that incorporates a slab platen for total-internal-reflectance illumination and a separate slab for direct-imaging illumination;

[0044] Figs. 4A – 4C illustrate effects of different polarization configurations used in different embodiments;

[0045] Fig. 5 provides a schematic illustration of a multiple-camera embodiment of the invention;

[0046] Fig. 6 provides a flow diagram illustrating methods for performing biometric determinations of identity and/or sample authenticity using measurements at a plurality of distinct optical conditions;

[0047] Fig. 7 is a graph showing the absorbance of hemoglobin at different light wavelengths;

[0048] Fig. 8 provides a schematic illustration of integration of a multispectral biometric sensor with a portable electronic device according to embodiments of the invention;

[0049] Figs. 9A and 9B compare results of total-internal-reflectance and multispectral-imaging measurements of a fingertip under non-ideal conditions (COLOR);

[0050] Figs. 10A and 10B illustrate image characteristics with the presence of optically clear film;

[0051] Fig. 11A provides a top view of a tissue phantom used is simulations for demonstrating certain aspects of the invention;

[0052] Fig. 11B provides examples of multispectral images at different wavelengths for the skin phantom shown in Fig. 11A;

[0053] Figs. 12A and 12B provide results of multispectral images taken for illustrative spoof samples (COLOR);

[0054] Fig. 13 provides a comparison of multispectral images taken for living and prosthetic fingers to illustrate spoof detection (COLOR);

[0055] Figs. 14A – 14D show results of a multiperson study conducted to evaluate the use of multispectral imaging data in providing complementary information to improve fingerprint biometric performance; and

[0056] Figs. 15A – 15D illustrate an exemplary embodiment in which a sensor is integrated with a turnstile.

DETAILED DESCRIPTION OF THE INVENTION

1. Overview

[0057] Embodiments of the invention provide methods and systems that allow for the collection and processing of biometric measurements. These biometric measurements may provide strong assurance of a person's identity, as well as of the authenticity of the biometric sample being taken, and may be incorporated within a number of different types of devices, such as cellular telephones, personal digital assistants, laptop computers, and other portable electronic devices, as well as stand-alone devices for physical or logical access. The common characteristic of the methods and systems of the present invention is the application of multiple distinct optical configurations used to collect a plurality of image data during a single illumination session. In some instances, methods and systems are provided for the collection and processing of data using a sensor with two distinct imaging systems. In other instances, the methods and systems disclosed pertain to data collected using a sensor with a single camera.

[0058] The sensors of the present invention provide for an information-rich dataset that results in increased security and usability relative to conventional sensors. The increased security derives from combining information from multiple images that represent distinct optical characteristics of the material being measured. These characteristics provide sufficient information to be able to distinguish between living human skin and various artificial materials and methods that might be used to attempt to spoof the sensor. As well, increased security is derived from the aspect of the present invention that provides a mechanism to perform measurements across a wide range of environmental and physiological effects. The robust and reliable sampling means that system security standards do not have to be relaxed to compensate for poor image quality.

[0059] Enhanced sensor usability is achieved by reducing the constraints on the individual for precise contact and positioning, as well as the requirement that the individual's skin has particular qualities. As well, the ability to extract subsurface biometric information from images collected under certain optical conditions provides a mechanism for performing biometric determinations even in those cases where the surface features are missing or damaged. In this way, the multispectral measurements made in embodiments of the present invention are advantageously robust to non-ideal skin qualities, such as dryness, excess

wetness, lack of resilience, and/or worn features such as are typically associated with the elderly, those who perform significant manual labor, or those whose skin is exposed to chemicals, such as hairdressers or nurses.

[0060] The set of all images collected under a plurality of distinct optical conditions during a single illumination session is referred to herein as "multispectral data". The different optical conditions may include differences in polarization conditions, differences in illumination angle, differences in imaging angle and differences in illumination wavelength. In some optical conditions the resulting images are significantly affected by the presence and distribution of TIR phenomena at the interface between the sample and the platen. These images are referred to herein as "TIR images." In some optical conditions, the resulting images are substantially unaffected by the presence or absence of TIR effects at the platen. These images are referred to herein as "direct images".

[0061] Skin sites applicable to the multispectral measurements described herein include all surfaces and all joints of the fingers and thumbs, the fingernails and nail beds, the palms, the backs of the hands, the wrists and forearms, the face, the eyes, the ears, and all other external surfaces of the body. While the discussion below sometimes makes specific reference to "fingers" in providing examples of specific embodiments, it should be understood that these embodiments are merely exemplary and that other embodiments may use skin sites at other body parts.

[0062] In some embodiments, a sensor provides a plurality of discrete wavelengths of light that penetrate the surface of the skin, and scatter within the skin and/or underlying tissue. As used herein, reference to "discrete wavelengths" is intended to refer to sets of wavelengths or wavelength bands that are treated as single binned units — for each binned unit, information is extracted only from the binned unit as a whole, and not from individual wavelength subsets of the binned unit. In some cases, the binned units may be discontinuous so that when a plurality of discrete wavelengths are provided, some wavelength between any pair of the wavelengths or wavelength bands is not provided, but this is not required. In some instances, the wavelengths are within the ultraviolet – visible – near-infrared wavelength range.

[0063] A portion of the light scattered by the skin and/or underlying tissue exits the skin and is used to form an image of the structure of the tissue at or below the surface of the skin. In some embodiments, such an image may include a fingerprint image, where the term

"fingerprint" is used broadly herein to refer to any representation of any skin site with dermatoglyphic features.

[0064] A detailed description is provided below of examples of multispectral systems that may accordingly be used in embodiments of the invention, but such a description is not intended to be limiting since other techniques may be used in alternative embodiments.

2. Single-Camera Multispectral Imaging

[0065] A first example of an embodiment that used multispectral imaging comprising a plurality of different illumination angles is shown in Fig. 1. The multispectral sensor 101 in this embodiment comprises one or more sources of light 103 that illuminate the finger at an angle, θ_1, one or more sources of light 133 that illuminate the finger at an angle, θ_2, and an imaging system 123, which may comprise a digital imaging system. In a preferred embodiment, angle θ_1 is less than the critical angle θ_C, and angle θ_2, is greater than the critical angle. The number of illumination sources may conveniently be selected to achieve certain levels of illumination, to provide for multiple illumination wavelengths, to provide for multiple polarization conditions, to meet packaging requirements, and to meet other structural constraints of the multispectral biometric sensor 101.

[0066] Illumination passes from the sources 103, 133 through illumination optics that shape the illumination to a desired form, such as in the form of flood light, light lines, light points, and the like. The illumination optics 105, 135 are shown for convenience as consisting of lenses but may more generally include any combination of one or more lenses, one or more mirrors, and/or other optical elements. The illumination optics 105, 135 may also comprise a scanner mechanism (not shown) to scan the illumination light in a specified one-dimensional or two-dimensional pattern. The light sources 103, 133 may comprise a point source, a line source, an area source, or may comprise a series of such sources in different embodiments. The sources 103, 133 may be narrow band sources such as monochromatic LED's and laser diodes or may be broad band sources such as white-light LED's or incandescent sources. In the case where light sources 103, 133 comprise a series of sources, the series of sources may be of the same wavelength or different wavelengths. The different sources 103, 133 may be configured identically or they may differ from each other.

[0067] After the light passes through the illumination optics 105, 135 it passes through a platen 117 and illuminates the finger 119 or other skin site so that reflected light is directed to an imaging system 123. The platen 117 may be configured in such a manner that illumination entering the platen will traverse the platen 117 at the desired angles. In the case of illumination system 109, which illuminates the skin site at an angle, θ_1, the facet, 117b, is oriented roughly normal to the illumination axis. Likewise, in the case of the illumination system 139, which illuminates the skin site at an angle, θ_2, the facet 117c is oriented at a steeper angle to be approximately normal to the corresponding illumination angle.

[0068] In a preferred embodiment, angle θ_1 is less than the critical angle and angle θ_2 is greater than the critical angle, which is defined as the angle at which total internal reflection occurs. Inset 151 shows the geometry associated with calculating the critical angle at the interface between two materials with different indices of refraction. As known in the art, refraction of light will generally occur at such an interface. The angle of refraction will be different for different illumination angles and will be governed by an equation of the form:

$$n_0 \sin\Theta_0 = n_1 \sin\Theta_1,$$

where n_0 is the refractive index in medium 0, n_1 is the refractive index in medium 1, and the angles, θ_0 and θ_1, are measured in the respective media from the normal to the interface.

When n_0 is less than n_1, the critical angle, θ_c, is given by:

$$\Theta_C = \sin^{-1}(\frac{n_0}{n_1}),$$

In the case where n_0 is approximately equal to 1.0 corresponding to air and n_1 is approximately equal to 1.5 corresponding to a type of glass, the critical angle is approximately 41.8 degrees. In a case such as this, the illumination angle, θ_1, may range from 0 up to approximately 40 degrees while illumination angle θ_2 will be at an angle greater than 41.8 degrees but less than the critical angle defined by the interface between the platen and the finger skin. For skin with an index of refraction of 1.4 this secondary critical angle is approximately 70.0 degrees.

[0069] In the case where θ_1 is less than the critical angle, the illumination light from subsystem 109 passes through the top facet of the platen 117a and will illuminate all portions of the finger 119 if present on or above the platen 117. A portion of the light illuminating the

finger 119 will be reflected from the skin surface while a second portion of the light will pass into the skin and undergo optical effects such as scattering and absorption. Generally, a portion of the light that enters the finger skin will scatter back out of the skin and pass back into the platen 117.

[0070] In the case where θ_2 is greater than the critical angle and in the absence of a finger, light from subsystem 139 will not pass through facet 117a and will be reflected back into the platen 117. Light will traverse the interface at facet 117a only in those locations that skin or other media with a suitable index of refraction is in direct optical contact with the facet 117a. At the points of contact between the platen 117 and finger 119, light will be partially reflected by the surface of the skin and partially absorbed by the skin in a manner described previously. However, in cases where the illumination wavelength is such that light does not propagate very far in the skin before being absorbed, the light scattered at each point of contact is well localized to that point. This is the case for a variety of different wavelengths in the ultraviolet, visible and near infrared spectral regions. In particular, visible light with a wavelength shorter than approximately 580nm is highly absorbed by hemoglobin and thus remains well localized to the point of illumination.

[0071] When illuminated by either subsystem 109 or 139, light scattered and reflected by the skin may be imaged with an appropriate imaging system. Fig. 1 illustrates an embodiment in which the imaging system 123 comprises a digital imaging system having a digital array 115 and detection optics 113 adapted to focus the light reflected from the object onto the array. For example, the detection optics 113 may comprise a lens, a mirror, a pinhole, a combination of such elements, or may use other optical elements known to those of skill in the art. The array 115 may comprise a silicon imaging array, such as a CCD or CMOS array, an InGaAs array, or other detector arrays as known in the art. In some instances, the imaging system 123 may also comprise an optical filter 121. The optical filter 121 may be a short-wavelength pass filter, which substantially blocks light of wavelengths longer than the illumination wavelength range. Such a configuration has been found by the inventors to provide advantageous performance in the presence of bright, broad-band ambient lighting, since wavelengths of light longer than approximately 580nm may substantially traverse the finger. In bright sunlight, this long wavelength light may saturate the detector array 121 preventing the acquisition of an image. Blocking such long-wavelength light with filter 121 while passing all desired illumination wavelengths may thus be beneficial.

[0072] In some instances the filter 121 may be a color filter array, which may furthermore be incorporated as part of the digital array 115. The color filter array 121 may comprise a red-green-blue filter array in the well-known Bayer pattern. In some instances, the filter elements may function to transmit wavelengths that differ from the standard red-green-blue wavelengths, may include additional wavelengths, and/or may be arranged in a pattern that differs from the Bayer pattern. In instances where such a color filter array 121 is included, the illumination source(s) may be white-light or broadband source(s). Alternatively, the illumination source(s) 103, 133 may comprise a plurality of narrowband sources, such as LEDs, with central wavelengths that are within the pass bands of filter elements comprised by the color filter array 121. In some embodiments, the illumination light is provided within a wavelength range of approximately 400 – 1000 nm. In other embodiments, wavelengths within the visible range of the spectrum, i.e. in the range of about 400 – 700 nm, are used. In some cases, a plurality of substantially discrete wavelengths are used, such as in an embodiment where three illumination wavelengths correspond to red, green, and blue colors at about 600, 540, and 450 nm respectively.

[0073] The sensor layout and components may advantageously be selected to minimize the direct reflection of the illumination sources 103, 133 into the digital imaging system 123. In one embodiment, such direct reflections are reduced by relatively orienting the illumination and detection optics such that the amount of directly reflected light detected is minimized. For instance, optical axes of the illumination optics 105 and the detection optics 113 may be placed at angles such that a mirror placed on the platen surface 117a does not direct an appreciable amount of illumination light into the detection subsystem 123. In a similar way, the detection optics 113 should be oriented to avoid light from illumination subsystem 139 that undergoes total internal reflectance at platen surface 117a.

[0074] In one embodiment, the optical axis of the imaging subsystem 123 is oriented in a manner that enables the imager to "see through" the platen surface 117a rather than be affected by total internal reflectance at this surface. In this way, the imaging subsystem 123 is able to obtain images of light scattered and reflected by a finger at all points rather than just those points where the finger is in contact and of necessary index of refraction. This constraint may be generally met by orienting the imaging subsystem 123 with an angle less than the critical angle, $\theta_{c,}$. In some cases, the imaging subsystem, 123, may be oriented approximately normal to the platen facet 117a.

[0075] In another embodiment, the optical axis of the imaging subsystem 123 is oriented in a manner that causes the imager to only see light from those points where the skin of proper index of refraction is in optical contact with the platen surface 117a. This can be achieved by placing the imager 123 at an angle greater than the critical angle, θ_C. If the imager is located at such a position and angle that it sees the illumination light in the absence of a finger or other material touching the surface 117a, it is referred to as a "bright-field" imaging condition. In such a case, points of contact with the finger will appear relatively dark. If the imager is located at such a position and angle that it does not see the illumination light in the absence of a finger or other material touching the surface 117a, it is referred to as a "dark-field" imaging condition. In such a case, points of contact with the finger will appear relatively light. In some cases, optical baffling, optical black coating, and/or other techniques known in the art may be employed to reduce the effect of spuriously scattered light and thereby increase image quality in either imaging condition, and particularly in the dark-field imaging condition.

[0076] The specific characteristics of the optical components comprised by the multispectral sensor 101 may be implemented to meet different form-factor constraints. For example, in an embodiment where the multispectral sensor is implemented in the top of a gear shift as part of a system to verify the identity of a driver of a vehicle, the light sources 103, 133 and digital array 115 might not fit within the gear-shift handle as constructed. In such an embodiment, an optical relay system may be implemented. For example, relay optics that comprise individual lenses similar to those in a bore scope may be used, or alternatively optical fibers such as used in orthoscopes may be used. In other cases, the optical paths of the illumination subsystems, 109, 139, and/or the detection subsystem, 123, may be folded through the use of mirrors to reduce the overall size. Still other techniques for implementing an optical relay system and/or folding the optical systems will be evident to those of skill in the art. In this way, components of the sensor may be located remotely from the sampling surface or be configured to fit other form-factor constraints.

[0077] The multispectral sensor may take multiple images in sequence during an illumination session. For example, in the case of multiple sources of different wavelengths, polarization conditions, and/or angles, the first source may illuminate during which time the camera acquires and stores an image. The first source is then extinguished and a second source is illuminated during which time a second image is acquired and stored. This sequence then continues for all sources and may further include a "dark" image that is collected with

no sources illuminated. Also any or all of the image conditions may be repeated an arbitrary number of times during an illumination session. The resulting images may be combined in various ways for subsequent processing. For example, difference images may be generated between each of the illuminated states and the dark image. The difference between these two types of images allows the effect of illumination to be separated from background illumination. The difference images may then be used for further processing according to other aspects of the invention.

[0078] Figs. 2A – 2D provide an example of a structure for a multispectral sensor with multiple illumination subsystems in which the optical conditions further include differences in polarization conditions. The basic structure of the sensor 201 is similar to that of Fig. 1, but multiple illumination systems have been depicted. Two illumination subsystems 209 are placed at angles greater than the critical angle, causing total internal reflectance to occur at platen surface 117a in the absence of direct contact with skin. Four illumination subsystems, 213, are oriented at angles less than the critical angle with respect to surface 117a. Polarizers 207, 211 have been added to the illumination subsystems 209, 213 and a polarizer 205 has been added to the imaging system 203. The polarizers 205, 207, 211 may be linear, circular, elliptical, or some combination of the these. The illumination sources 103 (4) and 133 (2) may be broadband or narrowband. If narrowband, the sources may all be the same wavelength or may be substantially different wavelengths. The polarizers 207 and 211 may also provide a "crossed polarization" arrangement or a "parallel polarization" arrangement on some or all of the illumination subsystems 209, 213. One or more of the illumination subsystems 209, 213 may have the polarizer omitted, producing randomly polarized illumination light.

[0079] In the case that one of the illumination subsystems 209, 213 provides a crossed polarization arrangement, the polarizer 207, 211 is disposed and oriented to provide illumination light that is polarized orthogonally to the polarization at the imaging system 203. Such orthogonality has utility in ensuring that detected light has undergone multiple scatter events, such as at the skin site 119, since other light will be blocked. This characteristic of crossed polarizers is particularly pronounced in the case where the illumination subsystem 213 is oriented at an angle less than the critical angle. In this case, in the absence of crossed polarizers, light may be detected from surface reflections from the skin, shallow scatter events, and deep scatter events. When crossed polarizers are used, surface and shallow-scattering phenomena are significantly attenuated. Conversely, parallel polarizer may be

advantageously employed to accentuate surface features and shallow scattering effects. Random polarization can also be employed advantageously, particularly in conjunction with at least one other polarization state.

[0080] In the case of linear polarizers, a crossed polarization arrangement may be provided by having the illumination polarizers 207, 211 oriented so that their axes are separated by approximately 90° from the axis of the detection polarizer 205. In alternative embodiments where the polarizers are circular polarizers, the orthogonality of the crossed polarization arrangement may be achieved by having circular polarizers of opposite sense (i.e. right hand and left hand). Further, in the case of linear polarizers, a parallel polarization arrangement may be provided by having the illumination polarizers 207, 211 oriented so that their axes are approximately parallel to the axis of the detection polarizer 205. In alternative embodiments where the polarizers are circular polarizers, parallel polarization may be achieved by using the same sense of circular polarization Due to the effect of the polarizers, multiple different optical conditions can be achieved by changing the polarization state of the system, even when only a single illumination wavelength is being used. Of course, multispectral conditions may also comprise the use of different illumination wavelengths, different illumination angles, and different imaging angles, among other combination of different optical conditions.

[0081] Further utility is derived from the observation that the cross polarization arrangement greatly reduces the visibility of latent prints left on the platen 117 by previous users, thus providing improved image quality and reducing the likelihood of spoofing by "reactivating" the latent prints. The utility of the arrangement also extends to conventional optical fingerprint readers. In particular, dark-field optical fingerprint systems are well-suited for the additional of polarizing elements in such an arrangement.

[0082] More generally, effects such as latent prints may be identified and segmented from the resulting multispectral data based upon their unique optical characteristics. For example, the optical qualities of latent prints with respect to different polarization conditions differ from living human tissue. Similarly, the spectral characteristics of latent prints as a function of wavelength and illumination angle are also quite different from living human tissue. An analysis of the spectral properties of the multispectral data can thus provide a means to separate the real tissue image from artifacts due to latent prints through techniques such as spectral unmixing, as known in the art. Spectral analysis may also be used to perform

image segmentation, defining and isolating the region of the image that contains tissue data from the image background. In a similar manner, the totality of information available in the multispectral dataset of the present invention is well suited to distinguishing between genuine human skin and various attempts to use artificial samples or other means to spoof the sensor. The composite optical characteristics of skin over multiple wavelengths, polarization conditions and illumination angles is distinct for human skin, and can be employed to distinguish between skin and many different classes of materials that might be used in an attempt to spoof the sensor.

[0083] The embodiments described in connection with Figs. 3A – 3C combine direct imaging with a variant of TIR imaging in a single integrated unit based on a single camera. As shown in Fig. 3A, the camera 314 may be oriented at an angle less than the critical angle Θ_C and, in some cases, is oriented to be normal to the finger 304 or other skin site. As such the camera 314 "sees" all of the finger 304 whether or not portions of it are in direct optical contact with the platen 306. One or more TIR-like images may be collected by illuminating with a light source 310 oriented at an angle greater than the critical angle Θ_C. As described above and as known in the art, light from the illuminator 310 will only pass into the skin site 304 at points at which TIR is frustrated by the direct skin-glass contact. Furthermore, if the wavelength(s) of the illumination source 310 are chosen to be wavelengths at which the skin is highly scattering and/or highly absorbing, the light that penetrates the skin at a particular point and is scattered back out will be substantially detected in that same region of the skin. Light that is not transmitted into the skin will be reflected and strike an optically black surface 308 or other form of light dump. In this manner, the arrangement is able to provide one or more TIR images (generated from one or more illumination wavelengths and/or polarization conditions) by relying on illumination-side critical-angle phenomena.

[0084] In such a system, the same camera 314 can also be used to acquire direct-imaging data generated by one or more illumination sources 312 oriented at an angle less than the critical angle Θ_c. The source(s) 312 may also incorporate optical diffusers and/or optical polarizers (not shown).

[0085] A second mechanism of introducing TIR illumination into the skin site 304 is shown in Fig. 3B. In this embodiment, a substantially planar slab of material 320 such as glass, acrylic, or other suitable material is oriented as a window. One or more illumination sources 322 such as LED's may be mounted on a side of the planar platen 320 in such a way

that a substantial portion of the emitted light is reflected multiple times through TIR reflections 328; a small portion of the emitted light is at too steep an angle to support TIR and is transmitted 324 in close proximate to the source 322. Light that undergoes multiple TIR reflections passes through the platen 320 at the points where there is contact with the skin site 304 when the skin has appropriate optical characteristics. This transmitted light 330 thus illuminates the skin site 304 in a manner that allows capture of a TIR image by the camera 314. In cases where it is not practical to embed the light source 322 directly in the platen 320, the light source 322 may be mounted externally on the outside of the platen 320. A simple lens or other optical element may be used to efficiently couple light from the external source to the platen 320. The multispectral imaging is performed using the same camera 314 and with light sources 312 as described in connection with Fig. 3A.

[0086] The slab illumination concept of Fig. 3B is further extended to provide direct illumination with the embodiment shown in Fig. 3C. In this instance, a second slab 330 is placed below the TIR slab 320. The two slabs 330 and 320 may be separated, such as by providing an air gap in one embodiment through the use of spacers 334. The direct-imaging slab 330 may incorporate features such as a hole and bevels to allow the light to escape at points that cause broad illumination of the skin site 304. Etching, scoring, diffuse coating, and/or features molded into the upper or lower surfaces of the direct-imaging slab 330 may be used to cause the light to be emitted from the slab 330 at the desired location(s). One or more illumination sources 332 for the direct imaging may be mounted on the side of, or in, the second slab 330 to provide the multispectral illumination. Collection of both TIR and direct imaging data may be performed with a single light detector 314, similar to the embodiments described in connection with Figs. 3A and 3B.

[0087] Merely by way of example, the inventors have constructed operating models of a one-camera multispectral imaging system similar to that depicted in Fig. 3B using the following specific components. The digital array was provided with a monochrome 640 × 480 CCD camera, namely a Lumenera model #LU-070, interfaced to a PC host through a USB interface. The illumination sources 312, 322 comprised 24 high-brightness, 5mm dia. Packaged LEDs powered by a laboratory power supply and controlled through a USB solid-state relay (OnTrak ADU218). Software control of the LEDs, the imager, and the associated image processing was performed with custom software written to operate within a MATLAB environment (Mathworks, Matlab 7.0).

[0088] The LEDs comprised four different groups of Vishay LEDs (TLCXXXX) of nominally blue, green, yellow, and red colors. Four of each color were inserted into each of the sides of a square acrylic platen to provide TIR illumination in a manner similar to component 322 in Fig. 3B to provide direct illumination. In addition, 4 blue LEDs and 4 green LEDs were mounted near the camera axis in a manner similar to components 312 in Fig. 3B. Polarizing film (Edmund Optics, NT38-495) was placed on the camera lens. Additional pieces of the polarizing film were cut out and used to cover the direct illuminators in some experiments. Both parallel and perpendicular polarization configurations were investigated, as was the case where the direct illumination sources were left unpolarized.

[0089] The inventors used the system to investigate the characteristics and utility of different types of polarization conditions. In particular the inventors examined the cases of parallel polarization, perpendicular polarization and random polarization. The results of the investigation can be better understood by referring to Fig. 4A – C, which illustrate the effect of ideal polarizers in an imaging system. Fig. 4A illustrates the case of a linear polarizer used in the detection arm and a parallel linear polarizer used in the illumination arm. In this case, the light detected from a material such as skin is a combination of surface-reflected light (I_S) and light from the subsurface skin (I_D). In contrast, Fig 4B illustrates the case of crossed or perpendicular polarizers where under ideal circumstances the detected light originates only from subsurface optical interactions (I_D). Finally, Fig. 4C illustrates the case wherein the polarizer is omitted from the illumination arm and assuming the source is randomly polarized. In this case the resulting signal comprises both surface (I_S) and subsurface (I_D) portions, but I_D is twice the magnitude as was observed in the case of parallel polarization, Fig 4A. From this, one can see the manner in which parallel polarization geometries emphasize the surface features (or de-emphasize the subsurface features) relative to the case of random polarization, and crossed polarization emphasizes the subsurface features. Moreover, these results demonstrate that if any two polarization conditions are measured (i.e., perpendicular + parallel, perpendicular + random, parallel + random), the separation of surface and subsurface effects can be achieved through an appropriate linear combination of the two images.

2. Two-Camera Multispectral Imaging

[0090] In a number of embodiments, the multispectral principles described above may be integrated with other biometric techniques to provide a multifactor biometric system. Integration with a conventional TIR imaging system is particularly suitable, as illustrated in Fig. 5 . Conventional optical fingerprint readers are generally configured such that the imager has an optical axis that is greater than the critical angle defined by the platen-air interface, but less than the critical angle formed by the platen-skin interface. In this way, the points of contact between the skin and platen cause a distinct optical contact. The points of contact so imaged can be bright or dark relative to the region without contact depending on the exact configuration of the fingerprint sensor. Illumination in such conventional systems can be greater or less than the critical angle, depending on whether the system is configured as a bright-field or dark-field imager. Typically, red light is used for illumination, which readily penetrates the skin and is highly scattered. In such cases, the illumination that passes into the skin is nonlocal and lights up a significant amount of the skin beyond the original illumination point.

[0091] Fig. 5 shows a conventional bright-field fingerprint sensor that has been modified in accordance with an embodiment of the present invention. The conventional part of the sensor is comprises a light-source 503, a platen 511 and an imaging system 505. The imaging system 505 may comprise lenses, mirrors, optical filters, a digital imaging array and other such optical elements (not shown). The optical axis of imaging system 505 is at an angle greater than the critical angle with respect to surface 511a. The light from the source 503 passes into the platen 511 and strikes a diffuse reflective coating 513, which broadly illuminates the platen surface 511a. In the absence of a finger 119, light undergoes TIR at surface 511a and a portion is collected and forms a TIR image by imaging system 505. When skin of proper index of refraction is in optical contact with the platen surface 511a, the points of contact will form relatively dark regions on the resulting image. Other variants of conventional optical fingerprint readers use different locations of sources 503 and/or imaging systems 505, to achieve a dark-field TIR image.

[0092] A second imaging system 509 may be added to the conventional geometry as shown in Fig. 5. The second imaging system 509 looks up at the finger 119 through facet

511b. Imaging system 509 has an optical axis less than the critical angle with respect to facet 511a. In some embodiments, imaging system 509 is oriented approximately normal to facet 511a. This imaging system may comprise lenses, mirrors, optical filters and a digital imaging array (not shown). In this manner, when light source 503 is illuminated, a TIR image may be captured by camera 505 while a direct image may be captured by camera 509. The inventors have discovered that even in cases where the TIR image is adversely affected by water, dirt, lack of contact, dry skin, etc, the image captured by camera 509 has been relatively unaffected and generally contains usable biometric features including the fingerprint pattern.

[0093] Imaging system 509 may further incorporate an optical polarizer (not shown), which may be a linear polarizer or elliptical (e.g. circular) polarizer. As well, other light sources 507 may be added to the system. The light sources 507 may be incandescent sources such as quartz-tungsten-halogen lamps or others commonly known in the art. The sources 507 may be other broad-band sources such as white-light LEDs or others known in the art. The sources may be quasi-monochromatic sources such as solid-state LEDs, organic LEDs, laser diodes, other kinds of lasers and quasi-monochromatic sources known in the art. The sources 507 may further comprise lenses, mirrors, optical diffusers, optical filters and other such optical elements.

[0094] The sources 507 may be substantially the same or may provide for different illumination wavelengths, angles, and polarization conditions. In the latter case, one of the sources 507a may have an optical polarizer (not shown) that is oriented substantially orthogonal to the polarizer incorporated in the imaging system 509. Such an optical geometry tends to emphasize features of the skin that lie below the surface. One of the light sources 507b may incorporate a polarizer that is substantially parallel to the polarizer used in imaging system 509, which will tend to emphasis surface features of the skin. The light sources 507 may be of the same wavelength or of different wavelengths (with or without polarizers). The number and arrangement of sources 507 may be different for different embodiments to accommodate form-factor constraints, illumination-level constraints, and other product requirements.

[0095] In one embodiment, the sources 507 are oriented at an angle less than the critical angle with respect to facet 511a. In a preferred embodiment, sources may be located at such an angle and position such that no direct reflection of the source is seen by imaging system 509 or 505. Such direct reflections can also be greatly mitigated through the use of

crossed-polarizer configurations, but some image artifacts will still be generally present if the sources are in the field of view. Moreover, parallel-polarized and non-polarized configurations are very susceptible to such back reflections.

[0096] Merely by way of example, the inventors have constructed operating models of a two-camera multispectral imaging system using the following specific components. A Cross Match V300LC CIR fingerprint sensor was modified to accommodate a second imager and additional optical components The second imagen was provided with a monochrome 640 × 480 CCD camera, namely a Lumenera model #LU-070, interfaced to a PC host through a USB interface. The illumination sources 103 comprised 72 discrete 0402 LED packages mounted to a custom printed circuit board controlled through available general-purpose input/output ("GPIO") pins available on the Lumenera camera board. The LEDs comprised six different groups of Kingbright, APHHS005XXX LEDs at nominal wavelength values of 400, 445, 500, 574, 610, and 660 nm. They were contained in two custom aluminum housings oriented on either side of the camera lens. The housings were used to limit scattered light and to provide a mechanism for covering the LEDs with a diffuser and linear polarizer. The diffusing film was Nitto Denko, H60 and the polarizers were cut from Edmund Optics, NT38-495. An additional piece of the polarizing film was cut out and placed above the camera lens. In some instances, the source and camera polarizers were set to be substantially orthogonal. In other instances the polarizers were set to be substantially parallel. In still other instances the source and/or camera polarizers were omitted. Software control of the LEDs, the imager, and the associated image processing was performed with custom software written to operate within a MATLAB environment (Mathworks, Matlab 7.0).

[0097] A second operating model was constructed in a similar fashion, but was capable of simultaneous collection of different illumination wavelength conditions. The second imaging sensor that was added to a modified Cross Match sensor was a color imager (OmniVision OV9121) that comprised a color filter array with red, green, and blue filters in a Bayer pattern. The illumination LEDs were chosen to have wavelengths that were contained within each of the three filter passbands. The acquisition of the three different wavelengths could be performed simultaneously by illuminating all LEDs at the same time and acquiring a single image. The raw image (not color corrected) was then sub-sampled in a manner consistent with the Bayer pattern to produce three sub-images representing the red, green, and blue illumination conditions. Alternatively, a white-light source such as a white-light LED or

an incandescent source could have been used. In such a case, the filters on the color filter array would effectively select a particular set of discrete wavelengths from the continuum of illumination wavelengths.

3. General System Description

[0098] Ways in which data may be collected with the structures shown in Figs. 1 – 3 and Fig. 5 and used for various biometric tasks are summarized with the flow diagram of Fig. 6. While the flow diagram uses a particular ordering, this ordering is not intended to be limiting. In other embodiments, the order in which certain functions are performed may be varied without exceeding the scope of the invention. Furthermore, the identification of specific functions in the flow diagram is not intended to be restrictive. In other embodiments, some of the functions may be omitted or additional functions may be performed without exceeding the scope of the invention. The method described in connection with Fig. 6 may be performed using any of the structures described in connection with Figs. 1 – 3 and Fig. 5 and with other structures that will be evident to those of skill in the art after reading this description.

[0099] Blocks 602 – 606 correspond generally to the collection of an image under a first set of optical conditions, with light being generated with a light source at block 602 and directed to the platen surface at block 604 to provide illumination to the skin site in cases where the finger is present and other necessary optical conditions are met. As indicated at block 606, the image is then collected with light from the skin site at a light detector.

[0100] Blocks 608 – 612 correspond generally to the collection of a second image collected under a second set of optical conditions, otherwise replicating the steps in blocks 602 – 606. In one embodiment, the first and second optical conditions may comprise using two cameras with two different angular orientations. In particular the first image 606 may be collected using a camera oriented at an angle less than the critical angle with respect to the platen surface, while the camera used to collect the second image 612 may be oriented at an angle greater than the critical angle. In one embodiment, the first and second optical conditions may be conveniently measured using the same camera but differ in the characteristics of the illumination light 602, 608. For example, the light generated in the first optical condition 602 may strike the sample surface of the platen at an angle less than the

critical angle while the light generated in the second optical condition 608 may strike the sample surface of the platen at an angle greater than the critical angle. As another example, the light generated in the first optical condition 602 may be polarized at an angle that is perpendicular to the polarizer used to collect the first image 606 while the light generated in the second optical condition 608 may be randomly polarized. As yet another example, the light generated in the first optical condition 602 may be a particular wavelength while the light generated in the second optical condition 608 may be of a different wavelength.

[0101] In some embodiments, the collection of the images under the first and second illumination conditions may occur substantially simultaneously. For example, in the case that the two different illumination wavelengths are used, a color filter array may be applied to the imager to allow acquisition of both wavelengths during a single acquisition interval. In a similar way, an array that comprises different polarization elements (e.g. parallel, perpendicular, and/or none) may be used to collect images under different polarization conditions. Such simultaneous collection of multiple illumination conditions may be usefully employed in a "swipe" configuration. In such a configuration, a skin site is passed over a sensor with a rectangular or "one-dimensional" aspect ratio and a series of slit images are collected. These separate images may then be recombined on "stitched" back together to form a single composite two-dimensional image. Such recombination techniques may be applied to a multispectral sensor in which the different optical conditions are collected simultaneously or sufficiently close in time relative to the finger swipe speed.

[0102] The collected data are then used to perform a biometric function, such as an identification, identity verification, spoof detection, producing a composite fingerprint, or estimating a personal characteristic although other biometric functions may be performed in other embodiments. As indicated at block 614, multispectral analysis is performed on the data collected at blocks 606 and 612 to identify multispectral properties of the sample being imaged to compare it to anticipated properties of living human skin or, in some cases, to compare it to the anticipated multispectral properties of a specific person. For example, any of several types of discriminant techniques may be used to perform spectral comparisons (whereby spectral information is extracted from multispectral data by ignoring the spatial information while preserving the relationship of the optical properties observed across the different optical conditions), a number of which are described in detail in commonly assigned U.S. Pat. No. 6,560,352, entitled "APPARATUS AND METHOD OF BIOMETRIC IDENTIFICATION OR VERIFICATION OF INDIVIDUALS USING OPTICAL

SPECTROSCOPY," the entire disclosure of which is incorporated herein by reference for all purposes. For instance, suitable discriminant techniques may include techniques based on Mahalanobis distances, spectral residual magnitudes, K-nearest-neighbor models, and other linear or nonlinear discriminant techniques. Multispectral imaging techniques as described herein may provide information on external friction ridge patterns of the skin site, internal friction ridge patterns, composition and position of other subsurface structures, spectral qualities of the skin site, the size and shape of the skin site, the texture of the skin site, and other features and statistical qualities that are distinct between human skin and various artificial materials and spoofing methods.

[0103] In block 616, a composite fingerprint image may be extracted from the multispectral data using techniques described herein. In one instance a TIR image might be enhanced using the extracted fingerprint image generated from one or more direct images in order to improve the overall fingerprint image quality. In another instance, there may be a linear or nonlinear numerical relationship established on parts of the image where both the multispectral image data and the TIR data are well defined. These parts may then be used to establish a mathematical model such as with Principal Component Regression, Partial Least Squares, Neural Networks, or other methods known to those of skill in the art. The parts of the TIR image that are missing because of poor contact with the platen or other reasons can then be estimated from the model so established. In another embodiment, the two entire image sets may be used, but the numerical model built using robust statistics in which the relationship is relatively unaffected by missing or degraded portions of the TIR image. Alternatively, numerical models may be established through the examination of previously collected multispectral image sets and then applied to new data. Furthermore, while in many instances comparisons are performed over the images as a whole, in other instances more local characteristics may be used by confining the comparison to a defined portion of the images. In any case, the resulting composite image of purportedly improved quality may then be reported to a host system for further biometric processing. Such a compositing process to produce a single fingerprint image may enable the sensor to produce better defined fingerprints from multiple distinct images while still being compatible with systems designed to operate with conventional single-image data.

[0104] In block 618, the multispectral data may be processed to produce a biometric template. In one example, a set of fingerprint images or a single composite fingerprint image may be extracted from the multispectral data in the manner discussed. A template may then

be generated for each fingerprint image by recording fingerprint minutia points or other methods known in the art. In the case that a template is extracted from each of a plurality of images collected under different optical conditions, the templates may be simply appended together, or they may be combined in such a way as to select those features that are common to multiple images while discriminating against those that spuriously appear in a small number of images (perhaps 1). Properties of the multispectral data other than the fingerprint data may be extracted to form a template that may be different from the fingerprint template or combined with the fingerprint template. Other such properties include locations of deeper blood vessels, salient surface and subsurface lines on the skin that arise from scarring and/or skin aging, skin texture for each optical condition and across optical conditions, overall spectral characteristics, overall finger size and shape.

[0105] In block 620, the multispectral data may be processed to produce estimates of various personal characteristics using various methods such as those described in commonly assigned U.S. Pat. Appl. No. 11/009,372, entitled "METHODS AND SYSTEMS FOR ESTIMATION OF PERSONAL CHARACTERISTICS FROM BIOMETRIC MEASUREMENTS," filed December 9, 2004 by Robert K. Rowe, the entire disclosure of which has been incorporated herein by reference for all purposes. For example a neural network or other linear or nonlinear algorithm may be applied to the multispectral data to estimate age or gender of the person whose finger was measured. One form of neural network well suited to such estimation tasks is a Kohonen self-organizing map (SOM), which may be applied in an unsupervised mode or in a supervised mode, including learning vector quantization (LVQ) using techniques known to one familiar in the art.

[0106] Block 622 describes the archival of the raw multispectral data for later retrieval and processing . The data may be archived in the original form or compressed using either a lossy or lossless compression algorithm. The multispectral data may also be preprocessed in some manner and the results of the preprocessing stored with or instead of the original data.

4. Spoof Detection

[0107] It has been noted above that embodiments of the invention have superior spoof-detection capabilities. In many instances, these capabilities derive from the sensitivity

of the multispectral imaging to physiological features that are indicative of a living state of the object being imaged. In particular, it is possible to determine a "liveness" state of an object by ensuring spectral consistency with living material. While a system that identifies only fingerprints might be fooled by a simulated finger having a duplicate of an authorized fingerprint pattern, embodiments of the invention that use multispectral image data are capable of discriminating between such simulated structures and actual living structures.

[0108] In particular, skin is a complex organ made up of multiple layers, various mixtures of chemicals, and distinct structures such as hair follicles, sweat glands, and capillary beds. The outermost layer of skin, the epidermis, is supported by the underlying dermis and hypodermis. The epidermis itself may have five identified sublayers that include the stratum corneum, the stratum lucidum, the stratum granulosum, the stratum spinosum, and the stratum germinativum. Thus, for example, the skin below the top-most stratum corneum has some characteristics that relate to the surface topography, as well as some characteristics that change with depth into the skin. While the blood supply to skin exists in the dermal layer, the dermis has protrusions into the epidermis known as "dermal papillae," which bring the blood supply close to the surface via capillaries. In the volar surfaces of the fingers, this capillary structure follows the structure of the friction ridges on the surface. In other locations on the body, the structure of the capillary bed may be less ordered, but is still characteristic of the particular location and person. As well, the topography of the interface between the different layers of skin is quite complex and characteristic of the skin location and the person.

[0109] Blood as distributed in the living tissue has distinct and strong absorbance bands in the visible region of light, as illustrated with the graph in Fig. 7. In this graph, the absorbance of hemoglobin at blood concentrations is shown for deoxygenated blood along curve 702 and for oxygenated blood along curve 704. Fortuitously, the visible wavelengths span an interesting region of the optical spectrum of blood, with the relationship of the red, green, and blue light being representative of spectrally active features in skin. A multispectral sensor may be used to make a static spectral reading of a sample, either when it touches the sensor surface or at a remote distance. In addition, the direct-imaging component of the sensor may illuminate the skin site as it moves to touch the sensor surface as well as during the time period immediately following the first contact between finger and sensor.

[0110] Information may be drawn from either or both of the static and dynamic phases to ensure that spectral qualities match those of living tissue. For example, during the dynamic phase, a change in blood distribution and/or color of the skin may be observed in the vicinity of the sensor as the skin blanches in response to pressure being applied to the skin site. In addition, areas of the skin may show a distinct pooling of blood, especially those regions at the perimeter of the area of contact between the finger and sensor. This blanching and/or pooling of blood provides an identifiable set of changes to the corresponding images. In particular, wavelengths less than approximately 580 nm, which are highly absorbed by the blood, are seen to get brighter in the region of blanching and darker in areas of blood pooling. Wavelengths longer than approximately 580 nm are seen to change much less during blanching and/or pooling. The presence, magnitude, and/or relative amounts of spectral changes that occur while the skin site touches the sensor can thus be used as an additional mechanism for discriminating between genuine measurements and attempts to spoof the sensor.

[0111] In embodiments where the sensor comprises both a direct imaging component and an TIR component, the pattern detected by the direct component using one or more illumination wavelengths and/or polarization conditions may be compared with the fingerprint pattern detected by the TIR component. In this way, internal fingerprint data due to blood and other subsurface structures is used to confirm the image of the external fingerprint that the TIR component collects. If there is a discrepancy between the two patterns, an attempt to spoof the sensor may be indicated and appropriate action taken. This method is especially sensitive to such spoof attempts as placing a thin, transparent film on a fingertip that has a different fingerprint pattern — while living tissue is still presented to the sensor, the difference in fingerprint patterns detected by the sensor nevertheless indicates a probable spoof attempt.

[0112] Other factors that can be monitored to discriminate between genuine tissue and attempts to spoof the sensor using an artificial or altered sample of some kind. For example, the difference in images taken under different polarization conditions will have certain characteristic properties for skin that will not be the same for some other types of materials. As another example, an image taken with one or more wavelengths may be monitored over time. During the specified time interval, changes such as those due to a pulse can be measured and used to confirm the genuineness of the tissue. As well, changes in the

image that result from sweating at the ridge pores may be observed and used for spoof detection.

5. Composite fingerprint generation and biometric template generation

[0113] Generally, there are one or more optical conditions that will produce a well-defined fingerprint image under most environmental and physiological conditions (assuming the finger being measured has well-defined fingerprint features). For example, in the case where the finger skin is moist and in good contact with the platen causing variable TIR effects across the platen, optical conditions that produce TIR imaging (i.e. optical conditions with an illumination angle greater than the critical angle and/or an imaging angle greater than the critical angle) would be expected to produce high-quality, high-contrast images. On the other hand, if the skin is particularly dry and/or not well coupled to the platen, direct imaging modes (i.e. illumination and imaging angles less than the critical angle) tend to produce higher quality fingerprint images. In addition the inventors have observed that different wavelengths will often define certain features (fingerprint patterns, scars) better than other wavelengths in certain portions of the image field and/or for certain fingers. Also, wavelengths less than approximately 580nm tend to produce features that are "blotchy" due to being sensitive to blood distributions in the finger skin. However, the sensitivity to blood can produce good quality fingerprint patterns in certain cases. Conversely, wavelengths longer than approximately 580nm tend to produce more homogeneous representations of the fingerprint and other features of the finger. The inventors have also observed that certain polarization conditions provide good fingerprint features only under certain conditions. For example, random polarization or parallel polarization configurations tend to show well defined surface features in those cases where the finger is not in good contact with the platen. Generally, however, the features produced by these polarization configurations are less well defined when there is good optical coupling between the finger and the platen. The cross-polarized configuration appears to be much less sensitive to such coupling variations.

[0114] Therefore, in order to produce a useable fingerprint biometric over a wide variety of conditions, the inventors find it useful to combine the fingerprint information from the plurality of optical conditions of the present invention in some way. For example, each of the images for a single illumination session taken under distinct optical conditions may be

processed separately to enhance fingerprint patterns using bandpass filters, median filters, Fourier filtering, Gabor filters, histogram equalization, and other linear and nonlinear enhancement techniques known in the art. The resulting enhanced images may then be combined in some way such as taking a simple average of the images. Another technique is to assess the fingerprint quality of each of the images using standard-deviation metrics and other methods known in the art, and just average together those images with sufficient quality, or to perform a weighted average across the images where the weighting is proportional to quality, etc.

[0115] Another method that has been successfully used by the inventors is to pass each of the processed multispectral images separately into a minutia detection algorithm, which typically performs another set of operations including filtering and binarization of the images as part of the process to detect minutiae. These binary images may then be combined in some fashion such as averaging or producing a median binarized image. Alternatively, each of the images can be separately processed to produce minutiae and then the minutiae may be combined in some fashion. For example, all minutiae may simply be compiled together or some selection process may be applied to choose only those minutiae that are present on more than a certain number of image planes. Nearby minutiae across multiple image planes may be consolidated into a single minutia point.

[0116] In cases where the objective is to perform biometric matching rather than produce an image or a representation of an image such as a template, the templates produced from each of the image planes may be separately matched to the corresponding templates from another session. The resulting match values may then be combined in some way to produce a final match value on which a match/no-match decision may be made. For example, all of the individual match values may be averaged together, or only those match values generated from high-quality images may be averaged, or the median match value is used, or the highest or lowest is used, or a variety of other similar mathematical and logical operations may be applied.

[0117] The inventors have also found that it is possible to match multispectral images to images taken with other imaging technology. For example, each plane of a multispectral data set may be separately matched to an existing fingerprint image. The resulting collection of match values may then be combined in some manner (such as by calculating a mean, median, greatest value, or the like) to produce a single matching score that may then be used

to perform a matching decision. In this manner, the multispectral data may be able to be used in conjunction with existing databases of non-multispectral fingerprint images taken with other optical sensors, capacitive sensors, thermal sensors, etc.

5. Applications

[0118] In many embodiments, the multispectral sensor is incorporated into a portable electronic device. This is illustrated for one embodiment in Fig. 8, in which the portable electronic device is denoted 810. The portable electronic device 810 may be a cellular telephone, personal digital assistant, digital camera, laptop computer, or other portable electronic device in different embodiments. A light detector 808 such as described above in the form of a digital imaging array may be incorporated into the device 810 so that when the detector 808 is not being used to collect multispectral data, it may be used for conventional imaging of objects, places, and/or people, as is common practice. Illumination of tissue may be provided with a light source configured as an LED illumination ring 804 or may be provided as another type of illumination source, and imaging optics 806 are used as described in connection with Fig. 1. In certain embodiments, multispectral configurations similar to those shown in Figs. 3A, 3B, or 3C may be incorporated into the device 810. In some of these embodiments, the configurations may be implemented in a swipe or strip-imaging configuration as described earlier. In other embodiments, the configurations may include a touch or area-imaging configuration.

[0119] Although the drawing shows the skin site 802 in contact with the sensor, other equivalent embodiments may be implemented in which the skin site is not in contact with the sensor. In some instances, the skin site may be located a remote distance from the sensor and the optical system of the sensor used to image the skin site at the appropriate distance.

[0120] In some embodiments, the sensor incorporated in a portable electronic device may contain an optical system that enables adjustable focus. The mechanism for adjusting the focus may include one or more lenses that may be moved into various positions. The focusing mechanism itself may be a conventional zoom arrangement. Alternatively, the mechanism for focusing may use a liquid lens based on the known phenomenon of electro-wetting. The focusing mechanism may comprise a MEMS micro-optical system or other similar focusing method. The focusing mechanism may comprise use of a wavefront coding

method in which a phase distortion is introduced that facilitates a post-acquisition image correction for different focal positions.

[0121] In a system configuration in which the portable electronic device has been designed to accommodate a "close-up" or macro image of the skin site for biometric sensing, the same optical system may be used to read an optical code such as a barcode. Such a barcode reading could, for example, initiate a service in which product information for a product corresponding to the UPC barcode is downloaded to the portable device to provide the consumer with comparative pricing and performance data. Similar barcode scans may be used in other embodiments for promotional games or various gaming activities. The conjunction of a barcode scan taken in close temporal proximity to a biometric scan could provide an audit trail for legal matters, including financial documents and transactions, forensic chain-of-evidence scenarios, and a variety of logical and/or physical security applications.

[0122] An imaging system on a portable electronic device that is configured to collect multispectral biometric data may also be used to scan in text, graphics, or other printed matter. In the case of text, the scanned data may be converted to an interpretable form using known optical-character-recognition ("OCR") techniques. Such text recognition may then be used to provide input of text-translation services, copying services, and other such services that may be aided by a rapid and convenient character input.

[0123] An imaging system on a portable electronic device may also be used as an optical input device to provide a mechanism for securely inputting data into the device for functions such as reprogramming, security overrides, and secure digital communications. The illumination components of the imaging system may be used as optical output devices in the reverse direction from the detector elements. The use of multiple, filtered wavelengths can provide for multiple high-bandwidth channels for rapid and/or robust optical communication.

[0124] The multispectral sensor may also be used as a smart switch to turn on or enable an associated device, system, or service. In such a capacity, the multispectral sensor may be set to a video-streaming mode to collect several frames per second. Each frame may then be analyzed to detect motion and, if motion is detected, perform image-processing steps to confirm that the motion is due to a finger by analyzing the overall shape, the texture, and/or the spectral qualities relative to a living finger. When a finger has been confirmed, the

smart switch function could , for example, turn a device on or off. If the motion could not be confirmed as coming from a finger, the sensor may simply resume monitoring.

[0125] The multispectral sensor may be used as a pointing device with similar functionality as a touchpad commonly used on a laptop PC. The multispectral sensor can be used in this fashion by monitoring the motion of the finger over the sensing area. Sliding the finger in a linear motion to the left can indicate a leftward motion to the PC (or cell phone, PDA, or other device), with similar effects for motions to the right, up, down, diagonal, or other directions. The cursor of the PC (or cell phone, PDA, or other device) may then be made to move in the indicated direction, or other appropriate action may be taken. In a similar fashion, the surface of the sensor may be tapped in different regions to simulate a click or double-click of a conventional PC mouse. Other motions, such as circles, X's, and the like, may be used to indicate other specific actions. In the case of touching or tapping the sensor, the degree of pressure may be estimated by evaluating the degree of blanching occurring in the skin site. In this manner, different actions may be taken in response to a soft pressure being sensed relative to a hard pressure.

[0126] The spectral qualities of the skin site in motion may be assessed to ensure that the detected motion is from that of a skin site rather than some spurious object. In this way, false motions can be avoided.

[0127] The sensor surface may also be used as a simple text entry device. In a similar fashion as in the case of a pointing device, the user may make motions with the fingertip that describe single letters or numbers, which are then accumulated by the portable electronic device.

[0128] A particular motion of the finger may be used to increase the security of the sensing system. In such a configuration, the spectral and spatial qualities of the finger are confirmed to match those that are on record while the particular finger motion that is made is assessed to ensure it is similar to the motion on record. In this way, both the finger qualities and the motion need to match in order to determine an overall match.

[0129] The multispectral sensor may be used to measure the ambient light condition. In order to do so, an image is taken without any illumination light turned on at a time when a skin site is not covering the sensor surface. The amount of ambient light may be determined from the image. Further details about ambient lighting may be derived in the case where the imager uses a color filter array or a similar mechanism to assess spectral characteristics of the

light. The measured levels of ambient light may then be used by the associated device to set levels for display brightness, backlighting, etc. Such settings are particularly useful in ensuring the usability of portable electronic devices while conserving battery usage. The same ambient light information can also be used by the multispectral sensor to dynamically set gain, offset and other imaging parameters to best accommodate the current ambient lighting environment.

6. Tests

[0130] A number of different experimental and simulation tests have been performed to illustrate the effectiveness of various aspects of the invention, including the ability to provide repeatable and reliable identity verifications and determinations. As an initial matter, the improvement in information collection by multispectral imaging over conventional TIR imaging is illustrated for different non-ideal conditions in Figs. 9A and 9B. For example, Fig. 9A provides a comparison of a conventional TIR image in panel 602 taken from a fingertip having extremely dry skin. It is plainly evident that many features are lost from the image, making identity determinations and verifications more likely to be less reliable. In contrast, the direct image provided in panel 604 shows that features that are lost with a conventional TIR image may still be collected with the multispectral imaging techniques described herein. In this example, the direct image is generated using illumination at five different wavelengths, 475 nm, 500 nm, 560 nm, 576 nm, and 625 nm, with crossed linear polarization. The panels at the right respectively show a mapping of the first three principal components to red (panel 906), green (panel 908), and blue (panel 910).

[0131] Fig. 9B shows the difference in results collected as a result of the presence of barrier materials between the skin site and the sensor for conventional TIR and for direct images. Panel 922 shows that the presence of an air gap when taking a conventional TIR image causes no information at all to be received because there is no frustration of the TIR. As seen in panel 920 for the same physical arrangement, the presence of an air gap does not significantly impair the collection of direct data. Conversely, the presence of pooled water causes a conventional TIR image to be swamped because the TIR is frustrated everywhere, resulting in a black image in panel 926 that conveys no useful information. This may also be

contrasted with the direct image shown in panel 624 under the same physical circumstances, with no significant impairment of the collection of biometric information.

[0132] Fig. 10 shows the effect of placing a thin, optically clear film on the finger, which in this experiment is simply transparent tape. Fig 10A shows the resulting TIR image, which shows a blank region where the tape is. In contrast, Fig. 10B shows the average direct image that was observed in the same set of multispectral measurements. In this case the direct imaging used a cross-polarized configuration taken across multiple illumination wavelengths. As obvious from the figure, the resulting direct images are able to see the skin structure and other features that lie below a thin film.

[0133] The ability for multispectral imaging to discern different characteristics in tissue has also been tested with optical simulations. A nonsequential optical raytracing package (TracePro, version 3.2) was used in this way to perform initial tests of the characteristics of multispectral imaging as used in embodiments of the invention. For this illustration, the main components of the sensor included a light source, a glass platen, and an image plane arranged in a direct-imaging configuration. The illumination light was linearly polarized, uniform illumination with a specified wavelength. The platen was modeled as 1-mm-thick BK7 glass. The image plane was below the platen and viewed the sample through a crossed linear polarizer.

[0134] A 10×10 cm^2 tissue phantom was constructed of a 210-μm epidermis and a 4-mm dermis, which was chosen to make the dermis optically infinite in extent for the simulation. The phantom incorporated various structures filled with blood. In particular, a series of 100×100 μm^2 vessels were placed at a spacing of 500 μm and a depth of 150 μm to simulate the capillary structure below the friction ridges. Also, several deeper blood-filled regions were created and positioned in the dermis to assess the ability of the system to detect and image such structures. The optical parameters for epidermis, dermis, and blood were taken from V. Tuchin, Tissue Optics (SPIE 2000), Chap. 1, the entire disclosure of which is incorporated herein by reference for all purposes.

[0135] In addition to the components of tissue, various characteristics of the optical interface with the sensor were also tested. One quadrant of the tissue cube included an external topography that followed the lines of the underlying capillaries, to simulate a well-defined set of friction ridges in contact with the sensor. The three remaining quadrants of the tissue cube were flat, with no external features, simulating a worn or missing fingerprint

pattern. Finally, one half of one of the flat quadrants had a 25-μm air gap between the sensor and the external surface of the tissue cube to quantify the effect of no optical contact between the skin and sensor.

[0136] A top view of the tissue phantom is shown in Fig. 11A. The vertical lines across the entire cube correspond to the capillaries. The denser array of lines in the lower left quadrant correspond to the portion of the phantom that has external ridge structure. The horizontal lines in the upper left quadrant as well as the circular structure in the lower quadrant demarks the segment of the quadrant in contact with the platen (upper triangle) from that with an air gap (lower triangle).

[0137] A variety of optical simulations were run over various illumination wavelengths in the visible and very near infrared spectral regions. Optical simulations were performed by tracing 4 million rays per wavelength distributed uniformly over a 6mm x 6mm region centered on the tissue phantom. In general, the optical simulations produced images that clearly showed the internal structures of the skin phantom. An example of such a set of simulated images is shown in Fig. 11B for wavelengths that vary from 400 nm to 800 nm in 50-nm increments. The type, depth, and resolution of the structures in each of the images clearly depends on the illumination wavelength. In addition, it is notable that the presence of the internal structures in the images are relatively unaffected by the presence or absence of external skin features, as well as whether the skin was in optical contact with the platen or not.

[0138] Spoof detection has been tested by the inventors with a number of different imitations and illustrate the ability of the multispectral sensing configurations to discriminate between living tissue and a nonliving imitation to perform a liveness assessment. Some of the results of such spoof-detection tests are presented in Figs. 12A – 13; some additional results are presented in U.S. Prov. Pat. Appl. No. 60/610,802, entitled "FINGERPRINT SPOOF DETECTION USING MULTISPECTRAL IMAGING," which has been incorporated herein by reference. Fig. 12A provides for a static spectral test comparing measurements of an actual fingertip with measurements performed on a playdough imitation constructed by the inventors. Panel 1202 provides a filtered pseudocolor image of the actual fingertip, which may be compared with the corresponding image of the playdough imitation in panel 1204.

[0139] The results of multispectral imaging comparisons are shown in panels 1206 – 1212. Panels 1206 and 1208 respectively show the results of Mahalanobis distance and spectral residual calculations for the actual fingertip. These may be compared with panels 1210 and 1212, which show corresponding results for the playdough imitation. It is evident from the results that the playdough imitation lacks multispectral characteristics present in the results for the actual fingertip, providing a basis for a liveness discrimination.

[0140] More impressive results are provided in Fig. 12B, which shows a similar array of panels for tests performed with a living fingertip and with an ultrarealistic prosthetic fingertip whose construction was commissioned by the inventors. The prosthetic fingertip was made of a multilayer silicone structure, cast on a real and available finger, and colored to match the coloring of the real finger. Fine detail was included on the prosthetic, including the fine detail of fingerprints. It is apparent from the filtered pseudo-color images of the actual finger and prosthetic shown respectively in panels 1222 and 1224 that it is difficult to discern which is the spoof imitation. This determination is, however, notably in contrast with the multispectral results shown in panels 1226 – 1232, with panels 1226 and 1228 respectively showing results of Mahalanobis distance and spectral residual calculations for the actual finger, and panels 1230 and 1232 respectively showing corresponding results for the prosthetic. Characteristic circumferential optical structure is evident in the Mahalanobis distance results that indicates lack of a liveness state for the prosthetic in panel 1230; this determination is even more pronounced with the spectral residual results shown in panel 1232 to be similar to those for the playdough imitation in panel 1212 of Fig. 12A.

[0141] A chromatic texture comparison is shown in Fig. 13 for the real finger and prosthetic. In each instance chromatic texture was analyzed by separating blue, green, and red contributions at 475 nm, 540 nm, and 625 nm. Color panes are shown in the left portion of the drawing and a power spectrum ratio for each chromatic contribution is shown in the right portion of the drawing. For the actual finger, a finger:finger power spectrum ratio is shown for the blue contribution 1302, the green contribution 1304, and the red contribution 1306. Similarly, for the prosthetic, a prosthetic:finger power spectrum ratio is shown for the blue contribution 1312, the green contribution 1314, and the red contribution 1316. These results demonstrate that significantly more power is provided in the prosthetic spatial frequencies than in the actual fingertip, particularly for blue illumination at higher spatial frequencies. Such a distinction enables the liveness-state determination to be made, and therefore for a spoof detection to be made.

[0142] A multiperson study was also conducted by the inventors, with study data being collected over a period of approximately sixteen days on fifteen adults using a two-camera system similar to Fig. 5. The nine male and six female participants ranged in age from 20 to 50 years (mean = 37.4 years). All were office workers with no health issues or other notable attributes. The data were collected in New Mexico during the winter period in which the atmospheric conditions were relatively dry. A total of 602 multispectral datasets were collected, with three or four images being collected from participants during each visit on each of four fingers (left index, left middle, right index, and right middle).

[0143] Direct images were preprocessed by blurring each image wavelength plane with a Gaussian filter of sufficient width to remove the fingerprint features. This smooth image was then used as the divisor for ratioing to the original image on a pixel-by-pixel basis, a process that acted primarily to remove effects of nonuniform illumination across the platen. The resulting image for each plane was then bandpass-filtered using a linear filter with a normalized passband of 0.15 – 0.35, which corresponds to real spatial frequencies of about 1.5 – 3.4 cycles/mm. This bandpass operation suppressed out-of-band variation, especially pixel-to-pixel noise) while passing frequencies useful for fingerprint features. An adaptive histogram equalization was performed to equalize the fingerprint contrast over the image plane.

[0144] The analysis of biometric performance was produced by performing a one-to-one match between pairs of fingerprint measurements. Each of the 602 sets of images was matched to all of the other images collected on the same finger ("genuine matches"). The same number of randomly selected nonmatching images was also compared to each of the chosen images ("imposters"). This resulted in a total of 6,056 comparisons being made for both genuine matches and imposter matches. In the case of genuine matches, no provision was made for eliminating pairs of images that differed only in the matching order so that the effective number of independent matches was 3,028.

[0145] Biometric processing of the TIR data was straightforward since it provided only a single image per measurement. The direct data, after the preprocessing described above, were processed to extract minutiae from each of six image planes corresponding to different illumination conditions (cross-polarized 445, 500, 574, 610, and 660 nm; and nonpolarized 640 nm) and matched against the corresponding direct image plane of a second

measurement. The match values from each of the six image planes were averaged to provide a final direct image score.

[0146] Fig. 14A shows the receiver operating characteristic ("ROC") curves for the TRI data and for the combined direct ("MSI") data. The ROC curve shows the relationship between the false nonmatch rate ("FNMR") to the false match rate ("FMR") in percentage units. The equal-error rate ("EER"), which is the point on the curve where the FNMR equals the FMR, is seen to be quite elevated for the TIR data (~20%) while the EER for the combined direct data is much lower (~0.7%). Based on 3,028 independent comparisons and binomial statistics, the 95% confidence intervals for these two performance metrics are [18.8%, 21.6%] and [0.4%, 1.0%] respectively. The differences of these performance estimates are therefore statistically significant.

[0147] The TIR error is dominated by poor-quality images due to prints such as those shown in the left panel of Fig. 9A. The fingerprint software used for this investigation provides a low-quality warning indicator for such cases. A total of 122 TIR prints were designated as low image quality by the fingerprint software, which corresponds to 20.3% of all TIR data collected. Further investigation showed that the TIR image quality problems were related to certain study participants, as illustrated in Fig. 14B. This figure plots the fraction of each participant's TIR mages that were designated as low image quality, which was as large as 90% for one subject. It is clear that certain participants (i.e. numbers 1, 3, 7, and 8) were responsible for a majority of the poor TIR images. A visual examination of the fingers of participants with the largest rates of low-quality TIR images indicated that these people's skin was notably dry.

[0148] The effect of the low-quality TIR images on the resulting biometric performance can be seen in Fig. 14C, which shows the distributions of the match values for both genuine and imposter comparisons. These distributions are shown for two cases. Case A includes all TIR images, as were used to generate the TIR curve in Fig. 14A. Case B was reanalyzed to remove all instances in which one or both of the images being matched is designated as low quality. By removing 20.3% of the TIR data, the performance of the remaining data improved from an EER of approximately 20% to 1.8%. The figure shows clearly that removing the low-quality TIR images results in a significant improvement in the distribution of the genuine match values, the distribution of the imposter match values changes imperceptibly. None of the direct-image data used to generate the corresponding

performance curve in Fig. 14A was designated as low-image quality by the fingerprint software.

[0149] For samples in which the corresponding TIR image was not designated as low quality, the TIR matching score was averaged together with the individual multispectral scores to produce a composite match value. In cases where the TIR image was designated as low quality, the composite match value was generated from just the individual multispectral scores, as before. Performing this procedure on the entire dataset yields the ROC curve shown in Fig. 14D. There is clear improvement of the direct + TIR data (EER ~ 0.4%) versus the multispectral data alone (~0.7%).

[0150] The results of this study indicate that multispectral sensors as described herein are able to collect images from which useful fingerprint information can be extracted. Moreover, common effects that severely affect a conventional TIR sensor have little or no effect on a multispectral sensor. This result, particularly when combined with the result described above of using multispectral imaging as a powerful liveness detector, demonstrates a number of useful features of embodiments of the invention over the prior art.

7. Example

[0151] A specific example of a structure that incorporates a sensor as described herein for an embodiment is described in connection with Figs. 15A – 15D. In this embodiment, the sensor is comprised by a turnstile having the general structure shown in Fig. 15A, the turnstile being of the type that may be used to control access by people to different areas in an amusement park, sports arena, or the like. The different areas between which the turnstile controls access are denoted as a "paid area" and a "free area" in Fig. 15A. Access is controlled with a dropping-arm tripod obstacle 1502. The biometric sensor 1504 may be mounted on the top surface of the turnstile housing.

[0152] A specific structure for the biometric sensor is shown in Fig. 15B, with imaging taking place over a platen 1530 having an ergonomic cover plate; the back of the ergonomic cover plate may act as an optical reference. Direct illumination is provided by illumination sources 1534, some of which include polarizers and others of which do not include polarizers. TIR-image illumination is provided by illumination sources 1532. No

polarizers are used with the TIR illumination sources. Light is directed to an imager 1538 after encountering the tissue by a turning mirror 1536. The imager includes a short-wavelength pass filter and a polarizer that may be parallel or perpendicular to direct illumination.

[0153] In this example, the direct illumination is provided by 18 LEDs made up of two colors and either with or without polarizers. An arrangement for the 18 LEDs is shown in Fig. 15C, with half of the illumination sources providing green light and half of the illumination sources providing blue light. For convenience, the illumination sources are numbered to define six different banks, with banks "1" and "3" providing blue polarized light, banks "2" and "4" providing green polarized light, bank "5" providing blue unpolarized light, and bank "6" providing green unpolarized light. In this example, the polarizers are linear polarizers and are uniformly aligned.

[0154] The TIR illumination sources are shown in Fig. 15D having 8 LEDs made up of two colors without any polarization. These LEDs may also be controlled as two separate banks, with bank "7" providing blue unpolarized light and bank "8" providing green unpolarized light.

[0155] This arrangement may allow an image sequence to be collected with seven frames: (1) ambient; (2) blue TIR with bank "7"; (3) green TIR with bank "8"; (4) polarized blue direct with banks "1" and "3"; (5) polarized green direct with banks "2" and "4"; (6) unpolarized blue direct with bank "5"; and (7) unpolarized green direct with bank "6." The image sequence may be collected in this order or in a different order over a period of time on the order of milliseconds. The turnstile may thus be configured to perform a biometric assessment of persons attempting to move from one access area to another using the methods described in detail above.

[0156] Thus, having described several embodiments, it will be recognized by those of skill in the art that various modifications, alternative constructions, and equivalents may be used without departing from the spirit of the invention. Accordingly, the above description should not be taken as limiting the scope of the invention, which is defined in the following claims.

WHAT IS CLAIMED IS:

1. A method of performing a biometric measurement on an individual, the method comprising:

illuminating a purported skin site of the individual under a plurality of distinct optical conditions during a single illumination session;

receiving light scattered beneath a surface of the purported skin site separately for each of the plurality of distinct optical conditions;

deriving a multispectral image of the purported skin site from the received light; and

performing a biometric function with the derived multispectral image.

2. The method recited in claim 1 wherein performing the biometric function comprises verifying an identity of the individual.

3. The method recited in claim 1 wherein performing the biometric function comprises:

comparing the multispectral image with a plurality of multispectral images stored in a database relating the plurality of multispectral images to identities of people; and

identifying the individual by finding a match between the multispectral image and one of the plurality of multispectral images stored in the database.

4. The method recited in claim 1 wherein performing the biometric function comprises:

comparing the multispectral image with a plurality of non-multispectral images stored in a database relating the plurality of non-multispectral images to identities of people.;

identifying the individual by finding a correspondence between the multispectral image and one of the plurality of non-multispectral images stored in the database.

5. The method recited in claim 4 wherein:

the database comprises values derived from the non-multispectral images; and

comparing the multispectral image with the plurality of non-multispectral images comprises extracting features from the multispectral image and comparing the extracted features with the values.

6. The method recited in claim 1 wherein illuminating the purported skin site of the individual under a plurality of distinct optical conditions comprises illuminating the purported skin site sequentially under the distinct optical conditions.

7. The method recited in claim 1 wherein the plurality of distinct optical conditions comprise distinct polarization conditions.

8. The method recited in claim 1 wherein the plurality of distinct optical conditions comprise different illumination wavelengths.

9. The method recited in claim 1 wherein the plurality of distinct optical conditions comprise distinct wavelengths of illumination light.

10. The method recited in claim 9 wherein:

illuminating the purported skin site of the individual under a plurality of distinct optical conditions during a single illumination session comprises simultaneously illuminating the purported skin site with illumination at a plurality of distinct wavelengths; and

receiving light scattered beneath the surface of the purported skin site separately for each of the plurality of distinct optical conditions comprises filtering the scattered light to separate the plurality of distinct wavelengths.

11. The method recited in claim 1 wherein:

illuminating the purported skin site of the individual under a plurality of distinct optical conditions comprises illuminating the purported skin site with light having a first polarization for each of the distinct optical conditions; and

receiving light scattered beneath the surface of the purported skin site comprises polarizing the received light with a second polarization,

wherein the first and second polarizations substantially define a cross-polarization condition.

12. The method recited in claim 11 wherein the first and second polarizations are each linear polarizations.

13. The method recited in claim 11 wherein the first and second polarizations are each circular polarizations.

14. The method recited in claim 1 further comprising collecting an image of surface structure of the skin site.

15. The method recited in claim 14 wherein collecting the image of the surface of surface structure of the skin site comprises illuminating the skin site with light from within the platen at an angle greater than a critical angle defined by an interface of the platen with an environment external to the platen, the surface structure corresponding to portions of the skin site in contact with the platen.

16. The method recited in claim 1 wherein i a position of the purported skin site is substantially unchanged during the single illumination session.

17. A multispectral sensor comprising:

a platen adapted for placement of a purported skin site by an individual;

an illumination source disposed to illuminate the purported skin site when placed on the platen;

an imaging system disposed to receive light scattered beneath a surface of the purported skin site; and

a controller interfaced with the illumination source and the imaging system, the controller including:

instructions to illuminate the purported skin site with the illumination source under a plurality of distinct optical conditions during a single illumination session;

instructions to derive a multispectral image of the purported skin site from light received by the imaging system separately for each of the plurality of optical conditions; and

instructions to perform a biometric function with the derived multispectral image.

18. The multispectral sensor recited in claim 17 further comprising a first polarizer disposed to polarize the light provided by the illumination source, wherein:

the imaging system comprises a second polarizer disposed to polarize the light scattered beneath the surface of the purported skin site; and

the plurality of distinct optical conditions comprise distinct relative polarization conditions.

19. The multispectral sensor recited in claim 17 further comprising a first polarizer disposed to polarize the light provided by the illumination source, wherein:

the imaging system comprises a second polarizer disposed to polarize the light scattered beneath the surface of the purported skin site; and

the first and second polarizers are substantially in a crossed configuration.

20. The multispectral sensor recited in claim 17 wherein:

the imaging system comprises a color filter array having a plurality of distributed filter elements, each filter element being adapted to transmit light of one of a limited number of specified narrowband wavelength ranges;

the plurality of distinct optical conditions comprise distinct wavelengths of illumination light within the specified narrowband wavelength ranges.

21. The multispectral sensor recited in claim 20 wherein the instructions to illuminate the purported skin site with the illumination source under the plurality of distinct optical conditions comprise instructions to illuminate the purported skin site with different wavelengths sequentially.

22. The multispectral sensor recited in claim 17 wherein the controller further includes:

instructions to illuminate the skin site with light from within the platen at an angle greater than a critical angle defined by an interface of the platen with an environment external to the platen; and

instructions to derive an image of surface structure of the skin site from light incident on the interface of the platen where the skin site is in contact with the platen.

23. A method of analyzing a tissue site, the method comprising:

receiving light scattered from the tissue site under first and second distinct polarization conditions during a single illumination session in which a position of the tissue site is substantially unchanged, wherein the second polarization condition does not define a complementary state relative to the first polarization condition; and

deriving an image of the tissue site from the received light.

24. The method recited in claim 23 wherein at least one of the first and second polarization conditions comprises a substantially random polarization condition.

25. The method recited in claim 23 wherein receiving light scattered from the tissue site under one of the first and second distinct polarization conditions comprises:

illuminating the tissue site with light having a first polarization; and

detecting light having the first polarization scattered from the tissue site.

26. The method recited in claim 23 wherein receiving light scattered from the tissue site under one of the first and second distinct polarization conditions comprises:

illuminating the tissue site with light having a first polarization; and

detecting light having a second polarization complementary to the first polarization scattered from the tissue site.

27. The method recited in claim 23 wherein deriving the image of the tissue site comprises:

deriving a first image of the tissue site from light received for the first polarization condition;

deriving a second image of the tissue site from light received for the second polarization condition; and

performing a linear combination of the first and second images.

28. The method recited in claim 23 further comprising performing a biometric function with the derived image.

29. A method of performing a biometric measurement on an individual, the method comprising:

illuminating a purported skin site of the individual placed disposed relative to a platen under a plurality of distinct optical conditions during a single illumination session, at least one of the plurality of distinct optical conditions including illuminating the purported skin site with light at an angle greater than a critical angle defined by an interface of the platen with an external environment and another of the distinct optical conditions including illuminating the purported skin site with light at an angle less than the critical angle; and

receiving light scattered from the purported skin site separately for each of multiple of the plurality of distinct optical conditions to derive a multispectral image of the purported skin site.

30. The method recited in claim 29 wherein:

portions of the purported skin site are in contact with the platen; and

receiving light scattered from the purported skin site comprises receiving light scattered from positions where the light incident on the purported skin site at the angle greater than the critical angle coincides with positions where the purported skin site is in contact with the interface to derive an image of surface structure of the purported skin site.

31. The method recited in claim 29 wherein the multiple distinct optical conditions comprise distinct polarization conditions.

32. The method recited in claim 29 wherein the multiple distinct optical conditions comprise distinct wavelengths of illumination light.

33. The method recited in claim 29 wherein:

the platen comprises a thickness of material; and

illuminating the purported skin site with light at the angle greater than the critical angle comprises reflecting the light multiple times through total internal reflectance within the thickness of material before passing through the interface of the platen onto the skin site.

34. The method recited in claim 29 wherein the light received under each of the multiple optical conditions is received by the same light detector.

35. The method recited in claim 29 wherein receiving light scattered from the purported skin site comprises receiving light scattered under the at least one of the plurality of distinct optical conditions with a first imager and receiving light scattered under the other of the distinct optical conditions with a second imager different from the first imager.

36. The method recited in claim 35 wherein receiving light scattered under the at least one of the plurality of distinct optical conditions comprises receiving the light under a dark-field configuration.

37. The method recited in claim 35 wherein receiving light scattered under the at least one of the plurality of distinct optical conditions comprises receiving the light under a bright-field configuration.

38. The method recited in claim 29 wherein a position of the purported skin site is substantially unchanged during the single illumination session.

39. A biometric measurement system comprising:

a platen adapted for placement of a purported skin site by an individual;

an illumination source;

a light detector; and

a controller interfaced with the illumination source and the light detector, the controller including:

instructions to illuminate the purported skin site under a plurality of distinct optical conditions during a single illumination session, at least one of the plurality of distinct optical conditions including illuminating the purported skin site with light at an angle greater than a critical angle defined by an interface of the platen with an external environment and another of the distinct optical conditions including illuminating the purported skin site with light at an angle less than the critical angle; and

instructions to derive a multispectral image of the purported skin site from light received by the light detector after scattering from the purported skin site for each of multiple of the plurality of distinct optical conditions.

40. The biometric measurement system recited in claim 39 wherein the instructions to derive the multispectral image comprise instructions to derive an image of surface structure of the skin site from light received by the light detector after scattering from positions where the light incident on the purported skin site at the angle greater than the critical angle coincide with positions where the skin site is in contact with the interface.

41. The biometric measurement system recited in claim 39 wherein the multiple distinct optical conditions comprise distinct polarization conditions.

42. The biometric measurement system recited in claim 39 wherein the multiple distinct optical conditions comprise distinct wavelengths of illumination light.

43. The biometric measurement system recited in claim 39 wherein:

the platen comprises a first thickness of material; and

the illumination source is disposed to illuminate the purported skin site with light at the angle greater than the critical angle by reflecting the light multiple times through total internal reflectance within the first thickness of material before passing through the interface onto the skin site.

44. The biometric measurement system recited in claim 43 wherein the platen comprises a second thickness of material through which the light scattered from beneath the surface of the purported skin site is propagated before being incident on the purported skin site.

45. The biometric measurement system recited in claim 44 wherein the second thickness of material includes a hole disposed relative to the light detector such that the light scattered from beneath the surface of the purported skin site propagates through the hole to the light detector.

46. The biometric measurement system recited in claim 44 wherein the first and second thicknesses of material are separated by a thickness of the external environment.

47. The biometric measurement system recited in claim 44 wherein the illumination source comprises:

a first illumination source disposed within the first thickness of material; and

a second illumination source disposed within the second thickness of material.

48. The biometric measurement system recited in claim 43 wherein the illumination source comprises an illumination source disposed within the first thickness of material.

49. The biometric measurement system recited in claim 39 wherein the light detector comprises an optical axis oriented at an angle less than the critical angle.

50. The biometric measurement system recited in claim 49 wherein the optical axis is oriented substantially normal to the interface.

51. The biometric measurement system recited in claim 39 wherein the controller further includes instructions to perform a biometric function with the derived multispectral image and derived image of surface structure of the skin site.

52. The biometric measurement system recited in claim 51 wherein the instructions to perform the biometric function comprise instructions to verify an identity of the individual.

53. A portable electronic device comprising the biometric measurement system recited in claim 39.

54. A turnstile comprising the biometric measurement system recited in claim 39.

55. A method of determining a liveness state of purported tissue, the method comprising:

illuminating the purported tissue under a plurality of distinct optical conditions during a single illumination session;

receiving light scattered from the purported tissue separately for each of the plurality of distinct optical conditions;

deriving a multispectral image of the purported tissue from the received light; and

verifying that the derived multispectral image is consistent with living tissue.

56. The method recited in claim 55 wherein the purported tissue is presented by a person, the method further comprising verifying an identity of the person from the derived multispectral image.

57. The method recited in claim 55 wherein illuminating the purported tissue under a plurality of distinct optical conditions comprises illuminating the purported tissue sequentially under the distinct optical conditions.

58. The method recited in claim 55 wherein the plurality of distinct optical conditions comprise distinct polarization conditions.

59. The method recited in claim 55 wherein the plurality of distinct optical conditions comprise distinct illumination angles.

60. The method recited in claim 55 wherein the plurality of distinct optical conditions comprise distinct wavelengths of illumination light.

61. The method recited in claim 60 wherein:

illuminating the purported tissue under a plurality of distinct optical conditions during a single illumination session comprises simultaneously illuminating the purported tissue with illumination at a plurality of distinct wavelengths; and

receiving light scattered from the purported tissue separately for each of the plurality of distinct optical conditions comprises filtering the scattered light to separate the plurality of distinct wavelengths.

62. The method recited in claim 55 wherein:

illuminating the purported tissue under a plurality of distinct optical conditions comprises illuminating the purported tissue with light having a first polarization for each of the distinct optical conditions; and

receiving light scattered from the purported tissue comprises polarizing the received light with a second polarization,

wherein the first and second polarizations substantially define a cross-polarization condition.

63. The method recited in claim 62 wherein the first and second polarizations are each linear polarizations.

64. The method recited in claim 62 wherein the first and second polarizations are each circular polarizations.

65. The method recited in claim 55 wherein receiving light scattered from the purported tissue comprises receiving light scattered from beneath a surface of the purported tissue.

66. The method recited in claim 65 further comprising collecting an image of surface structure of the purported tissue.

67. The method recited in claim 66 wherein collecting the image of the surface structure of the purported tissue comprises illuminating the purported tissue with light from within the platen at an angle greater than a critical angle defined by an interface of the platen with an environment external to the platen, the surface structure corresponding to portions of the purported tissue in contact with the platen.

68. The method recited in claim 55 wherein a position of the purported tissue is substantially unchanged during the single illumination session.

69. A liveness detector comprising:

a platen adapted for placement of purported tissue;

an illumination source disposed to illuminate the purported tissue when placed on the platen;

an imaging system disposed to receive light scattered from the purported tissue; and

a controller interfaced with the illumination source and the imaging system, the controller including:

instructions to illuminate the purported tissue with the illumination source under a plurality of distinct optical conditions during a single illumination session;

instructions to derive a multispectral image of the purported tissue from light received by the imaging system separately for each of the plurality of optical conditions; and

instructions to verify that the derived multispectral image is consistent with living tissue.

70. The liveness detector recited in claim 69 further comprising a first polarizer disposed to polarize the light provided by the illumination source, wherein:

the imaging system comprises a second polarizer disposed to polarize the light scattered from the purported tissue; and

the plurality of distinct optical conditions comprise distinct relative polarization conditions.

71. The liveness detector recited in claim 69 further comprising a first polarizer disposed to polarize the light provided by the illumination source, wherein:

the imaging system comprises a second polarizer disposed to polarize the light scattered from the purported tissue; and

the first and second polarizers are substantially in a crossed configuration.

72. The liveness detector recited in claim 69 wherein:

the imaging system comprises a color filter array having a plurality of distributed filter elements, each filter element being adapted to transmit light of one of a limited number of specified narrowband wavelength ranges;

the plurality of distinct optical conditions comprise distinct wavelengths of illumination light within the specified narrowband wavelength ranges.

73. The liveness detector recited in claim 72 wherein the instructions to illuminate the purported tissue with the illumination source under the plurality of distinct optical conditions comprise instructions to illuminate the purported tissue with different wavelengths sequentially.

74. The liveness detector recited in claim 69 wherein the controller further includes:

instructions to illuminate the purported tissue with light from within the platen at an angle greater than a critical angle defined by an interface of the platen with an environment external to the platen; and

instructions to derive an image of surface structure of the purported tissue from light incident on the interface of the platen where the purported tissue is in contact with the platen.

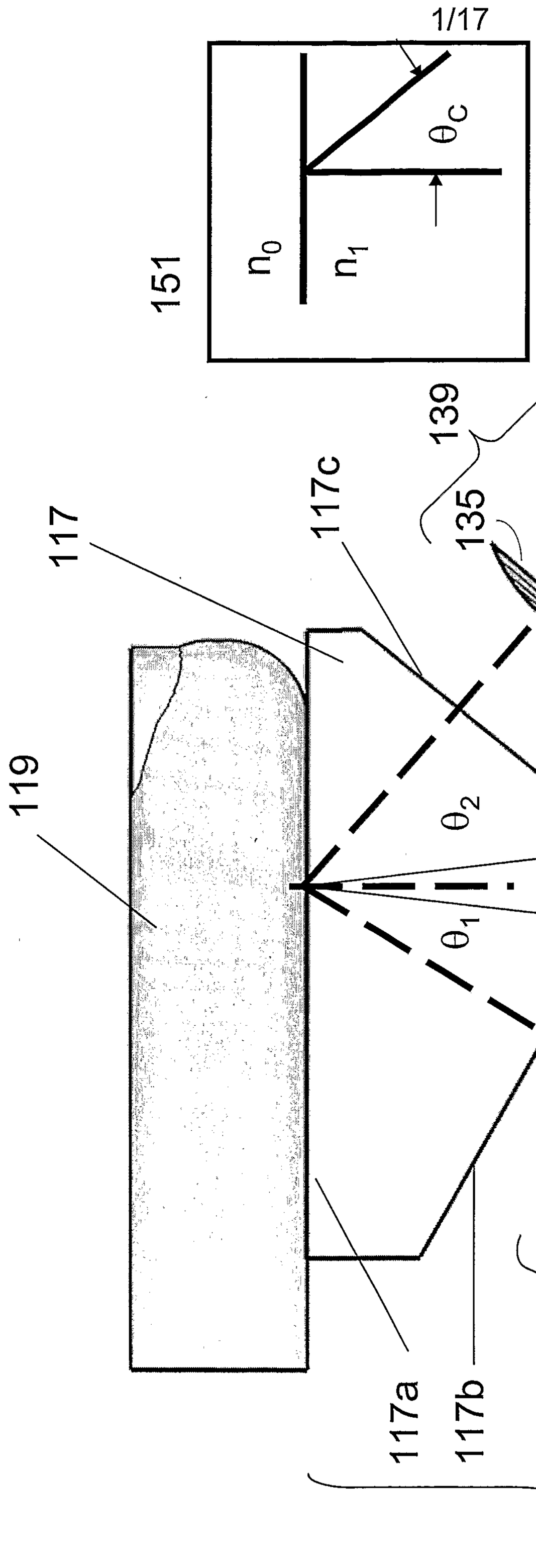
1/17
θ_C
151
n_0
n_1
139
135
133
117
117c
123
121
115
113
119
θ_2
θ_1
105
103
109
117a
117b
101

Fig. 1

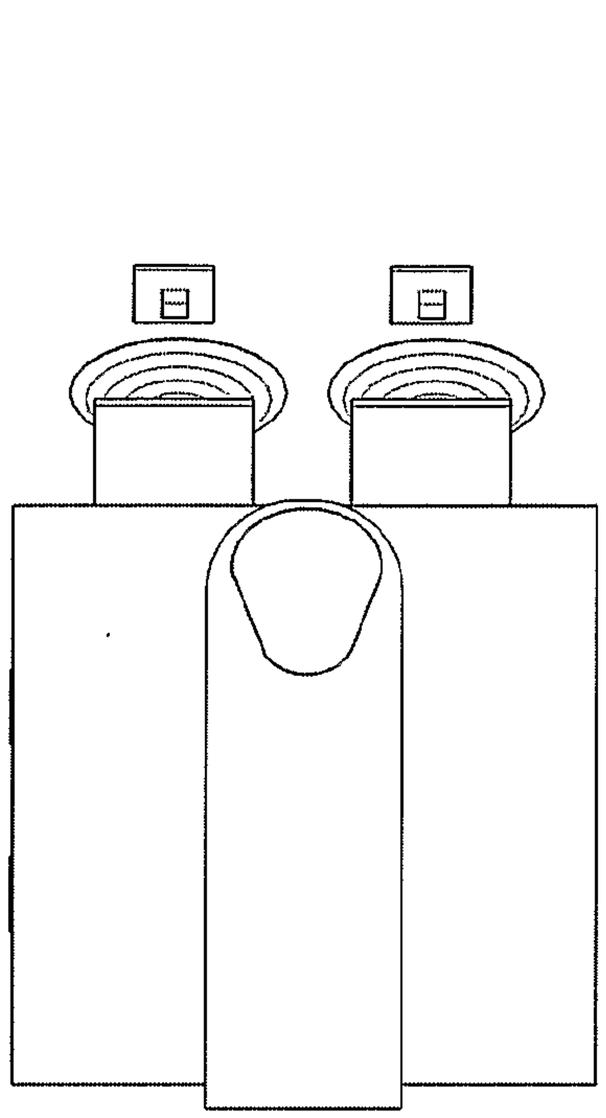

Fig. 2B

Top

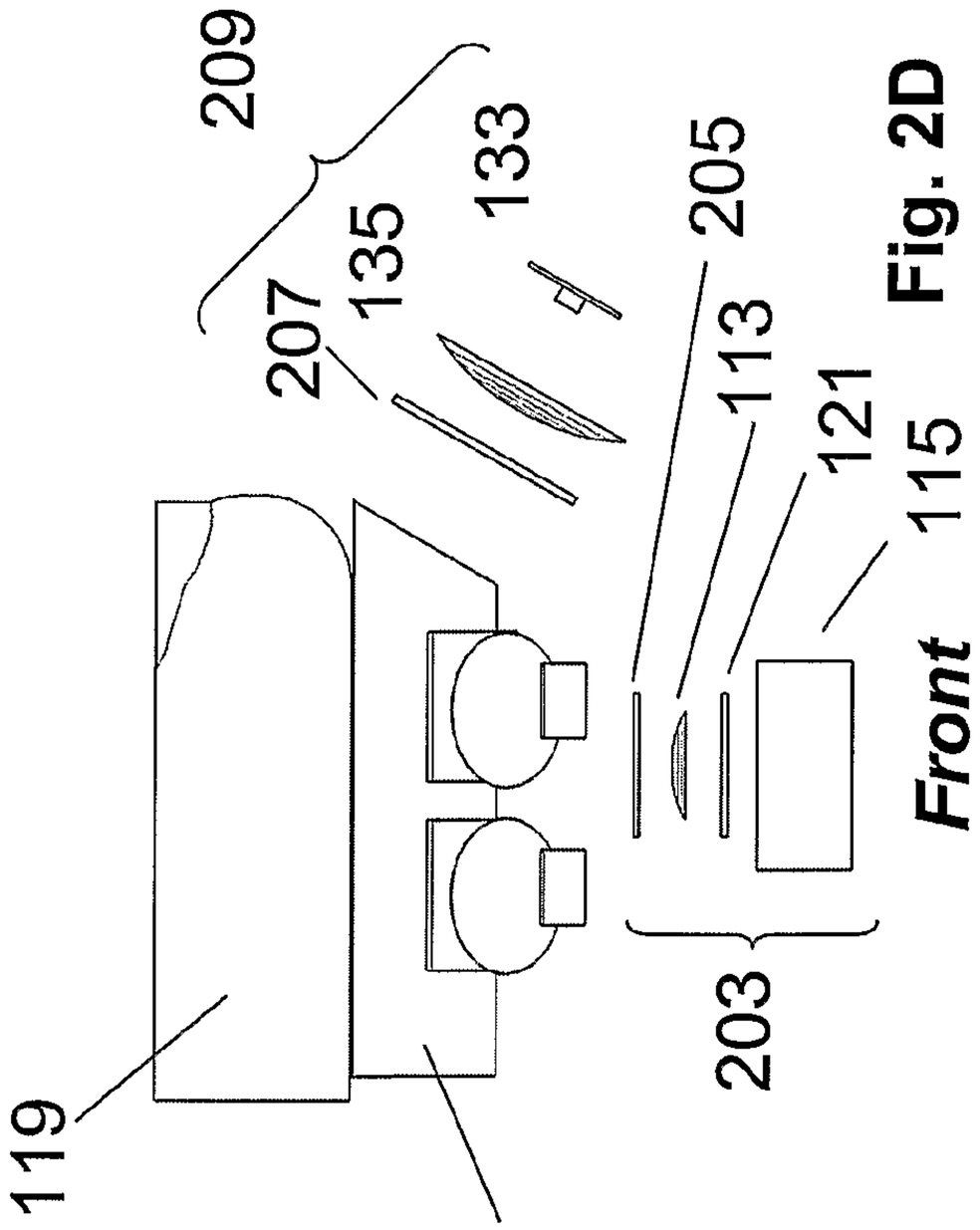

Fig. 2D

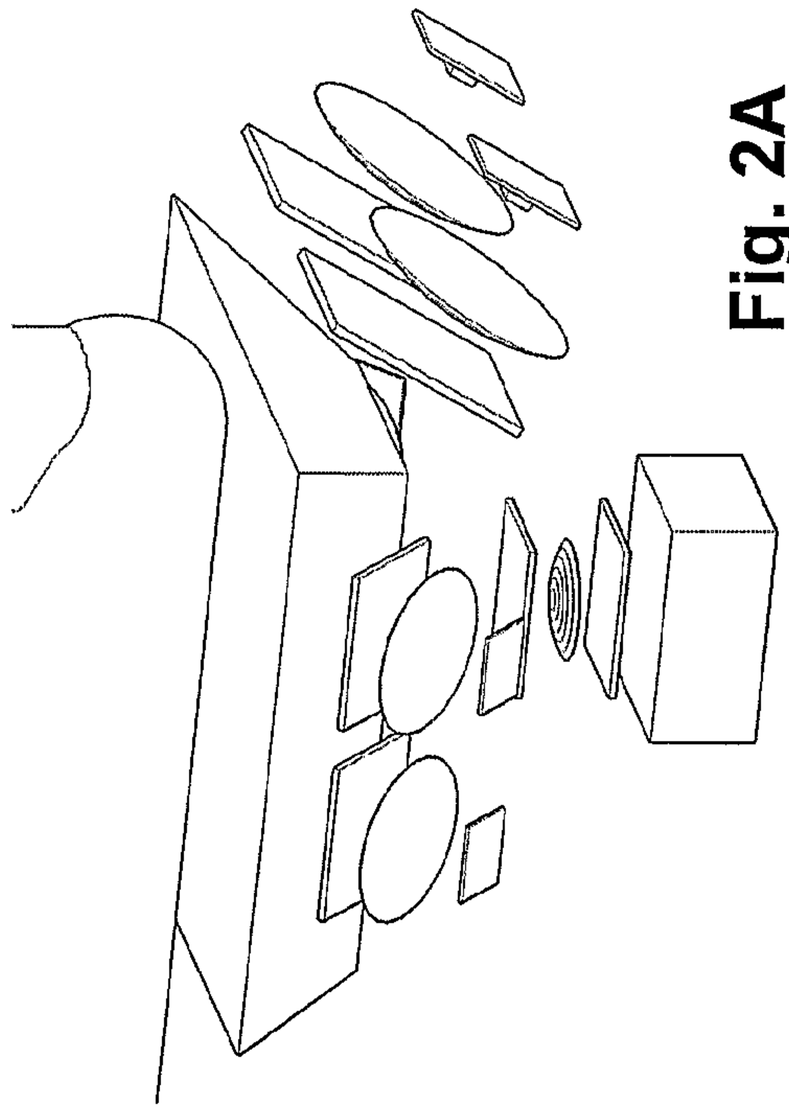

Fig. 2A

Isometric

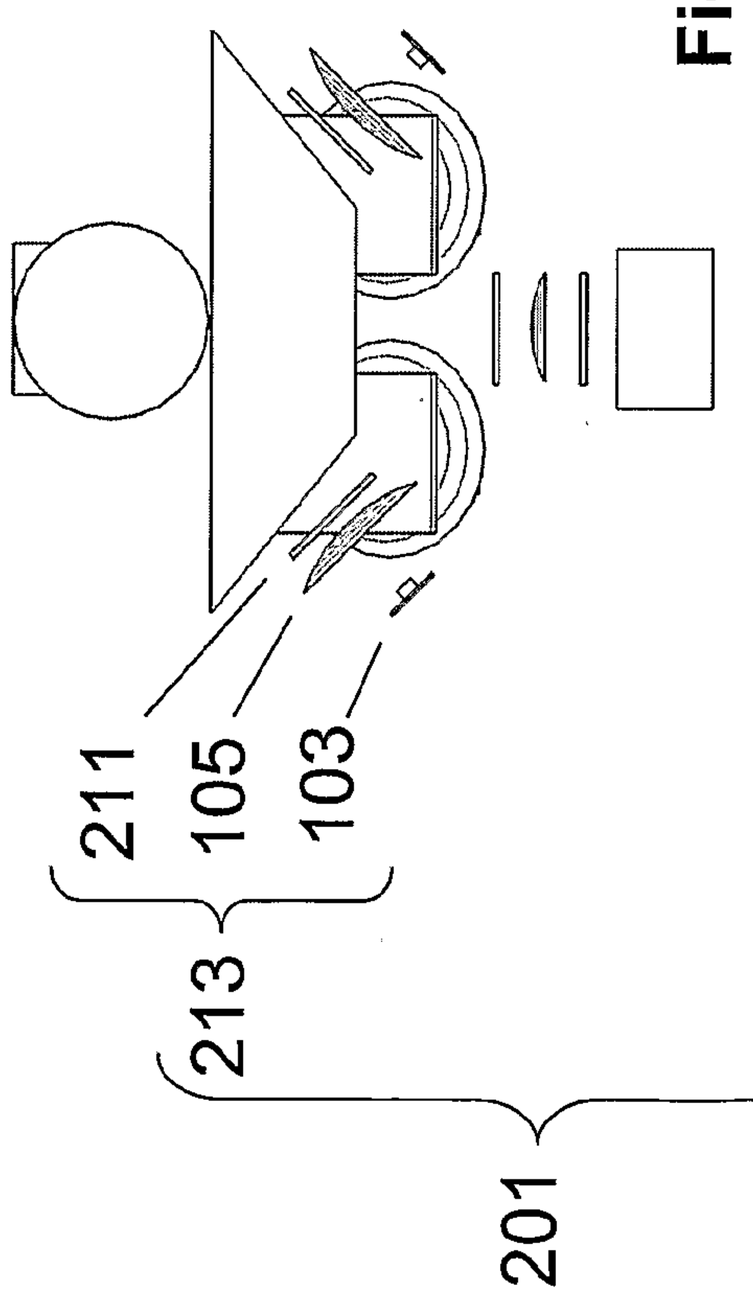

Fig. 2C

Left Side

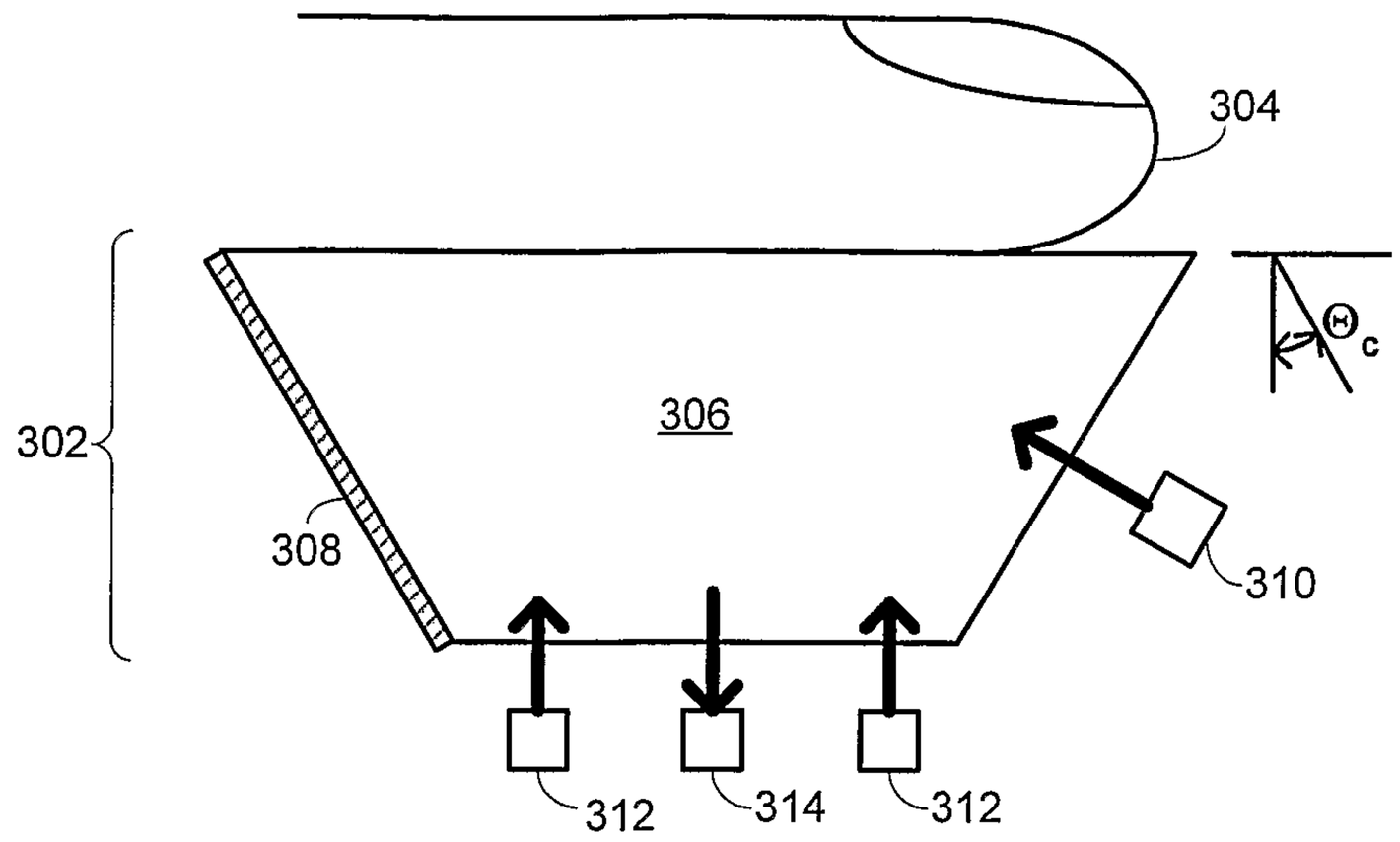

Fig. 3A

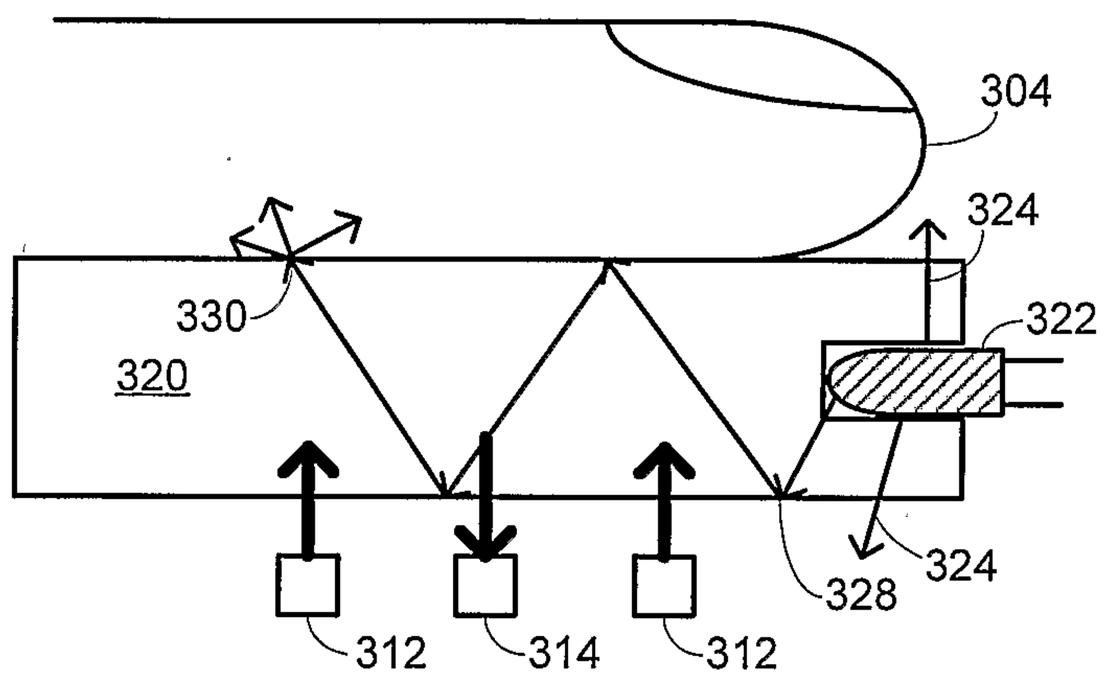

Fig. 3B

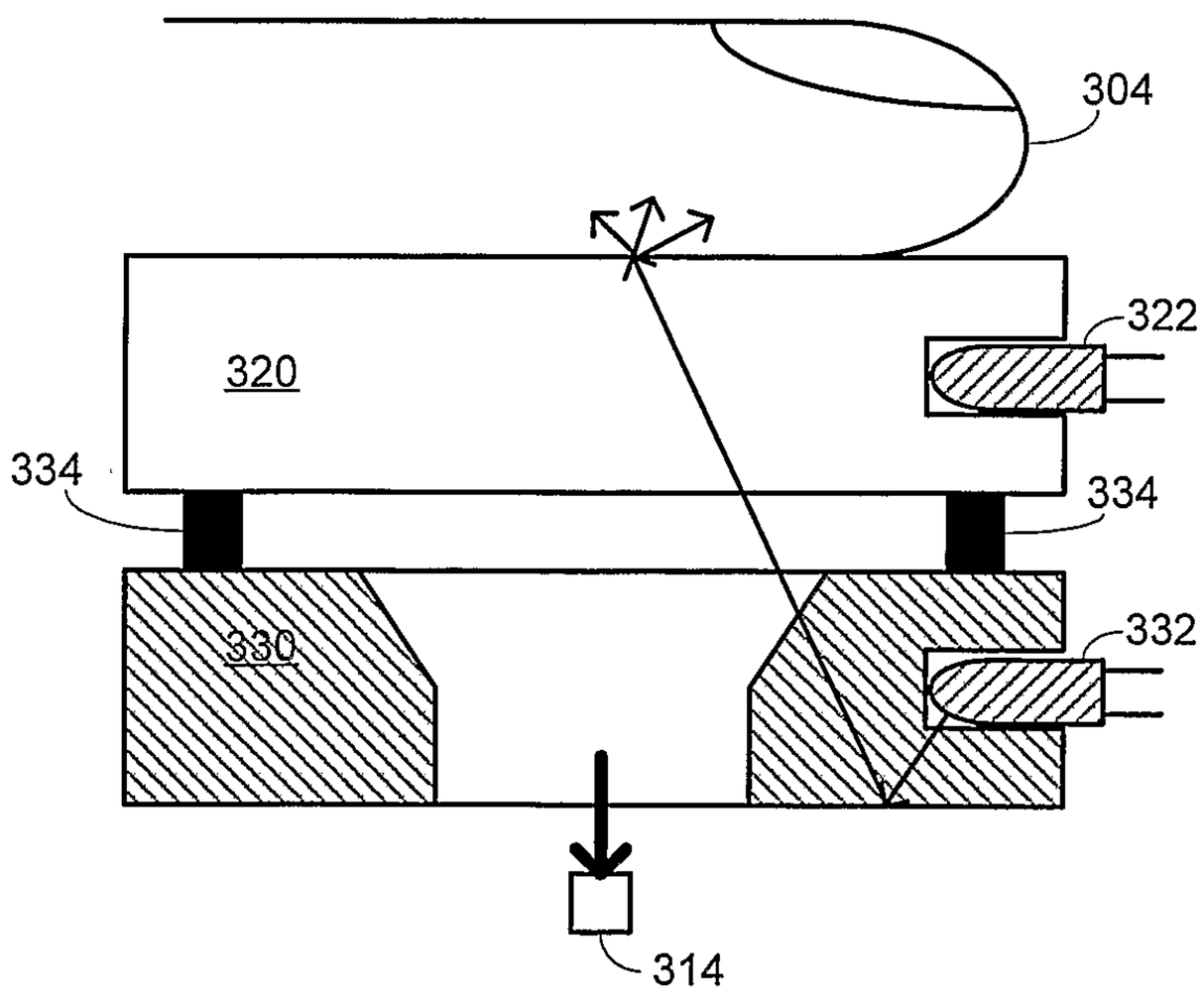

Fig. 3C

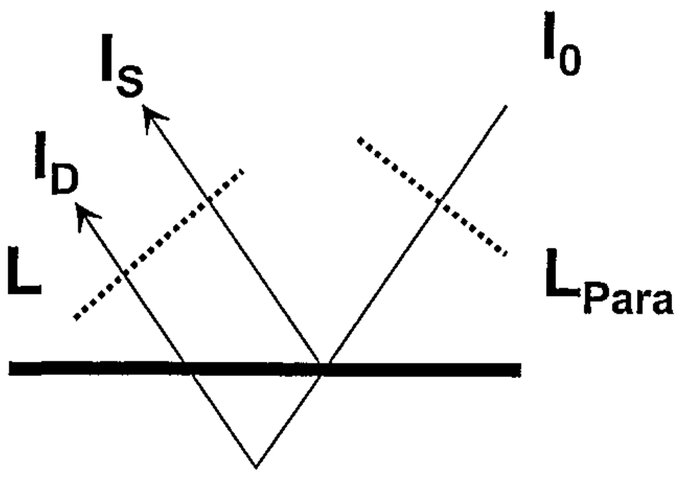

$I_{Detected} = I_S + I_D$

Parallel Polarizers

Fig. 4A

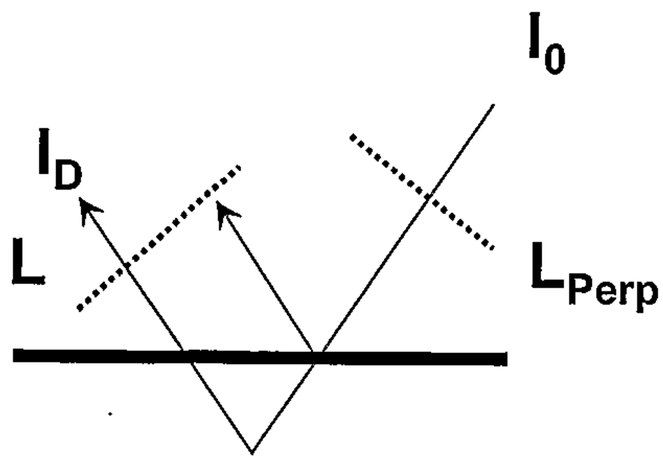

$I_{Detected} = I_D$

Crossed Polarizers

Fig. 4B

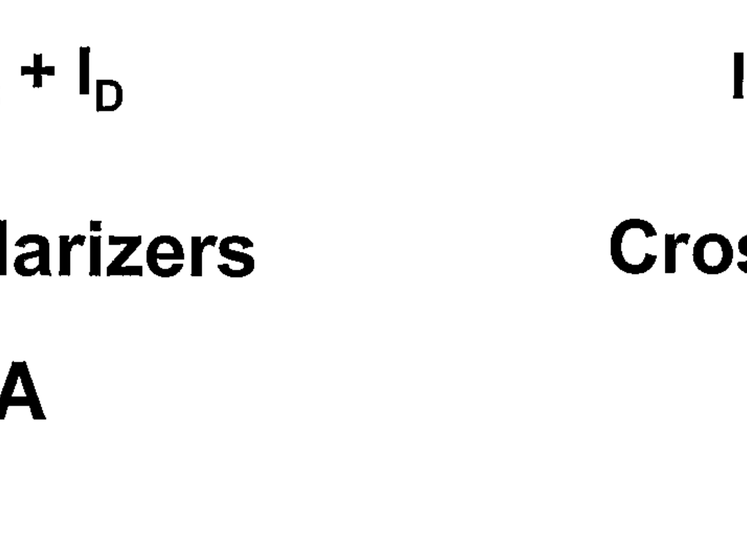

$$I_{Detected} = I_{Detected,\ Parallel} + I_{Detected,\ Crossed}$$

$$= (I_S + I_D) + I_D$$

$$= I_S + 2\ I_D$$

No Illumination-side Polarizer

Fig. 4C

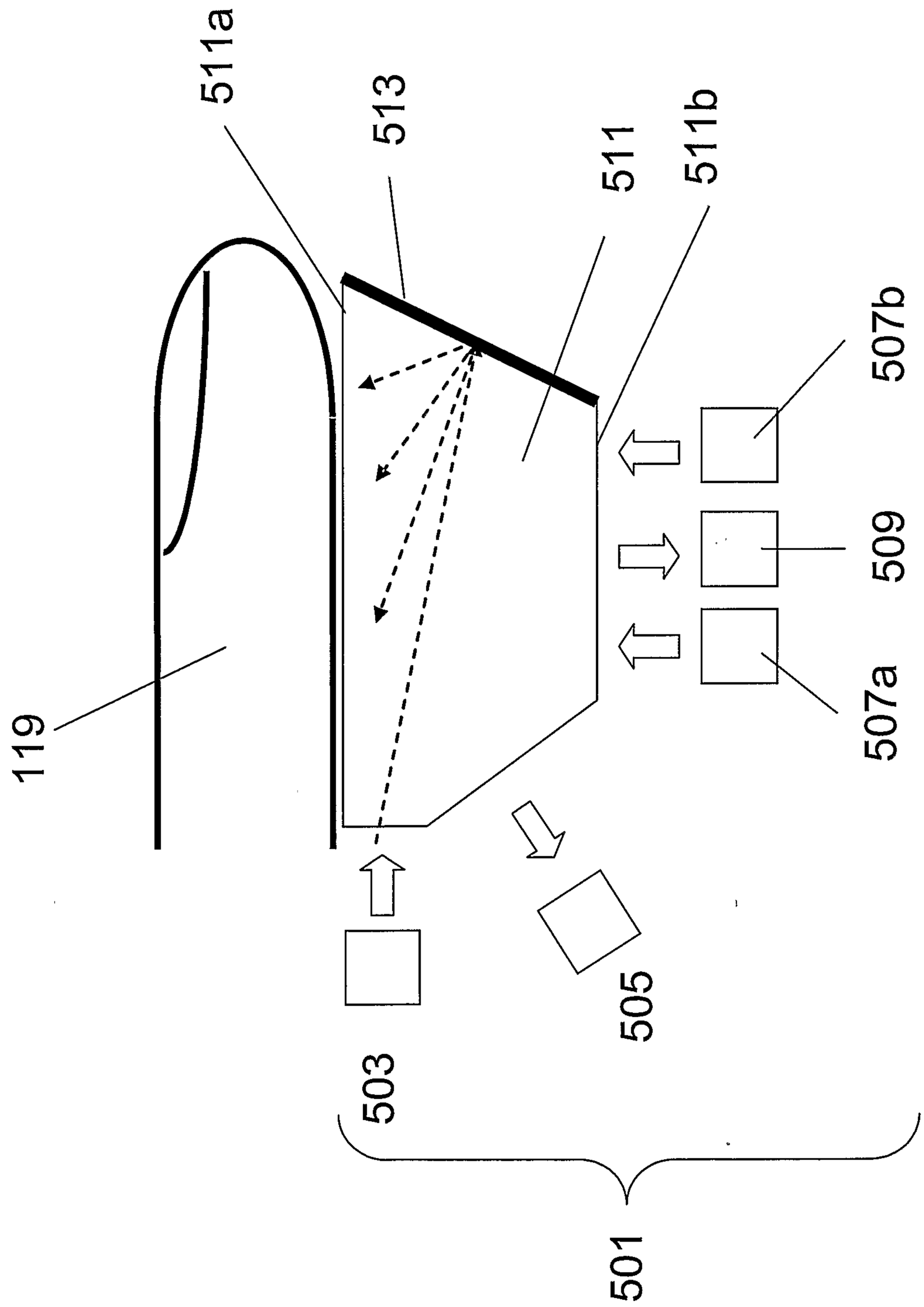

Fig. 5

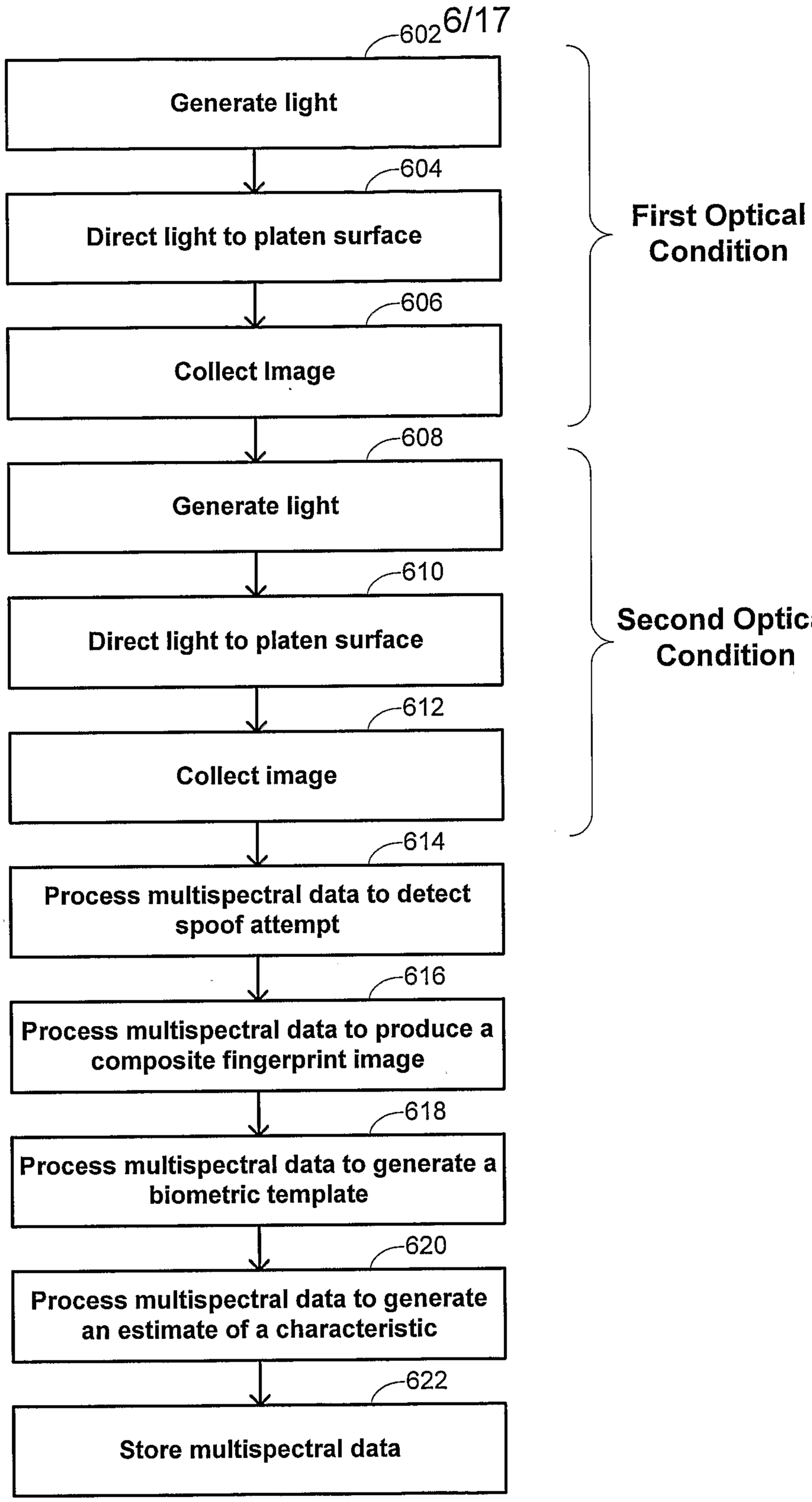
602
Generate light
604
Direct light to platen surface
606
Collect Image
First Optical Condition
608
Generate light
610
Direct light to platen surface
612
Collect image
Second Optical Condition
614
Process multispectral data to detect spoof attempt
616
Process multispectral data to produce a composite fingerprint image
618
Process multispectral data to generate a biometric template
620
Process multispectral data to generate an estimate of a characteristic
622
Store multispectral data

Fig. 6

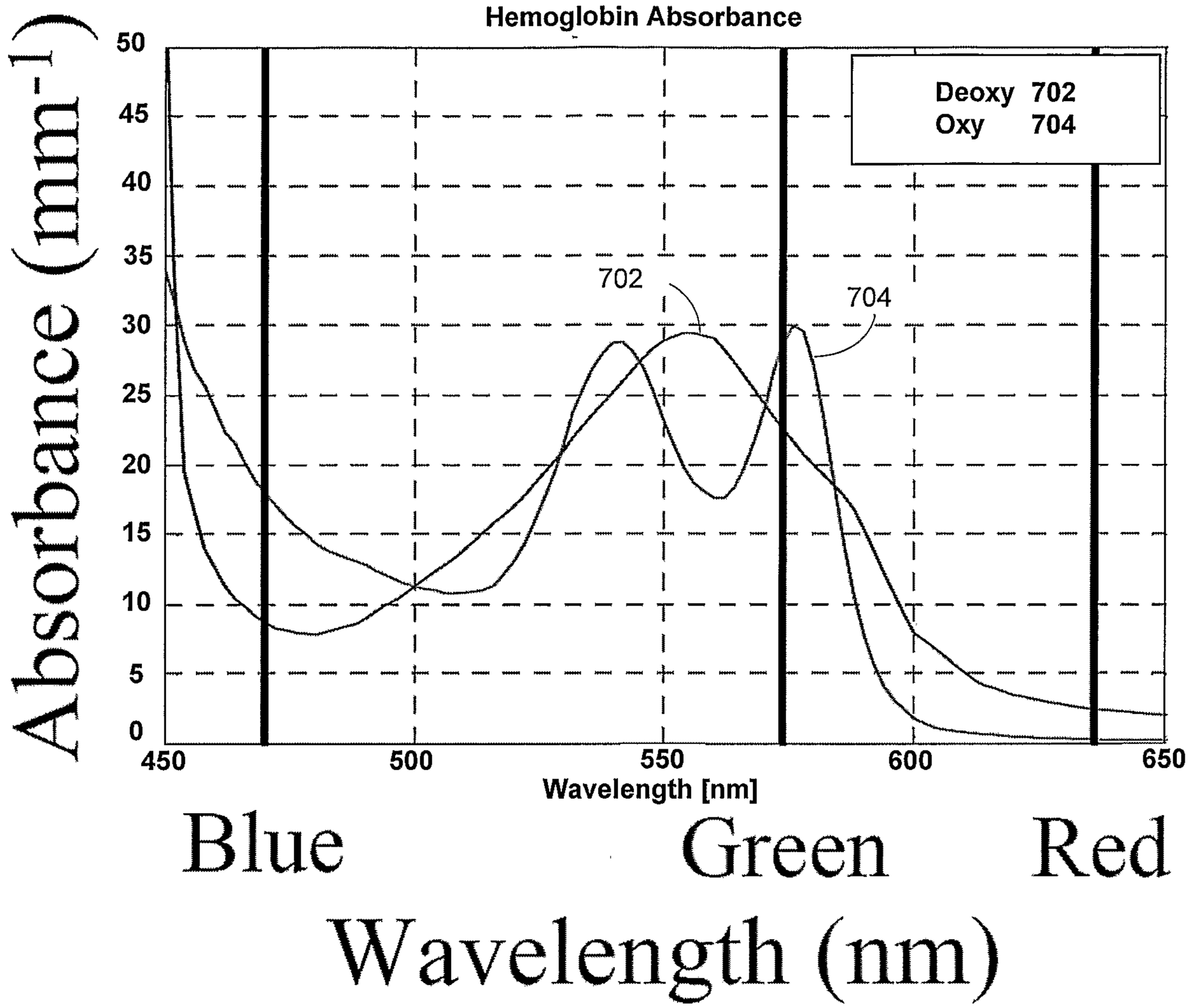
Hemoglobin Absorbance
Deoxy 702
Oxy 704
702
704
Absorbance (mM-1)
50
45
40
35
30
25
20
15
10
5
0
450
500
550
600
650
Wavelength [nm]
Blue
Green
Red
Wavelength (nm)

Fig. 7

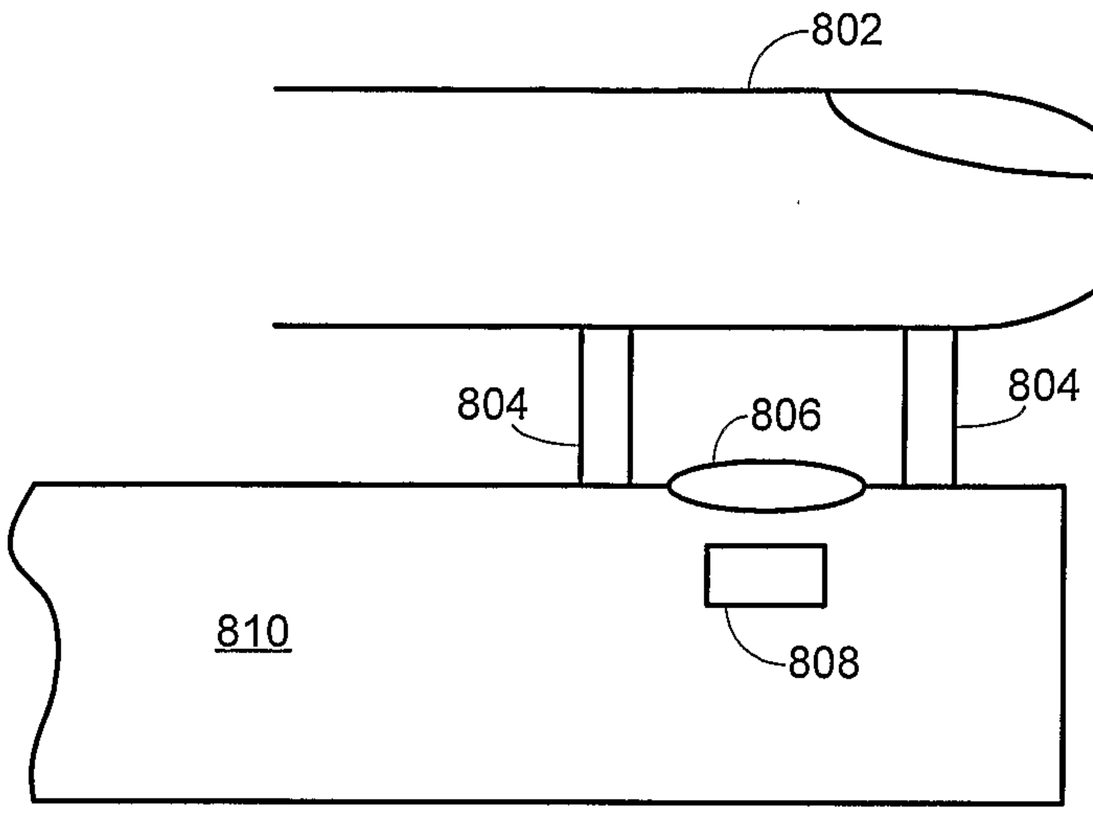

Fig. 8

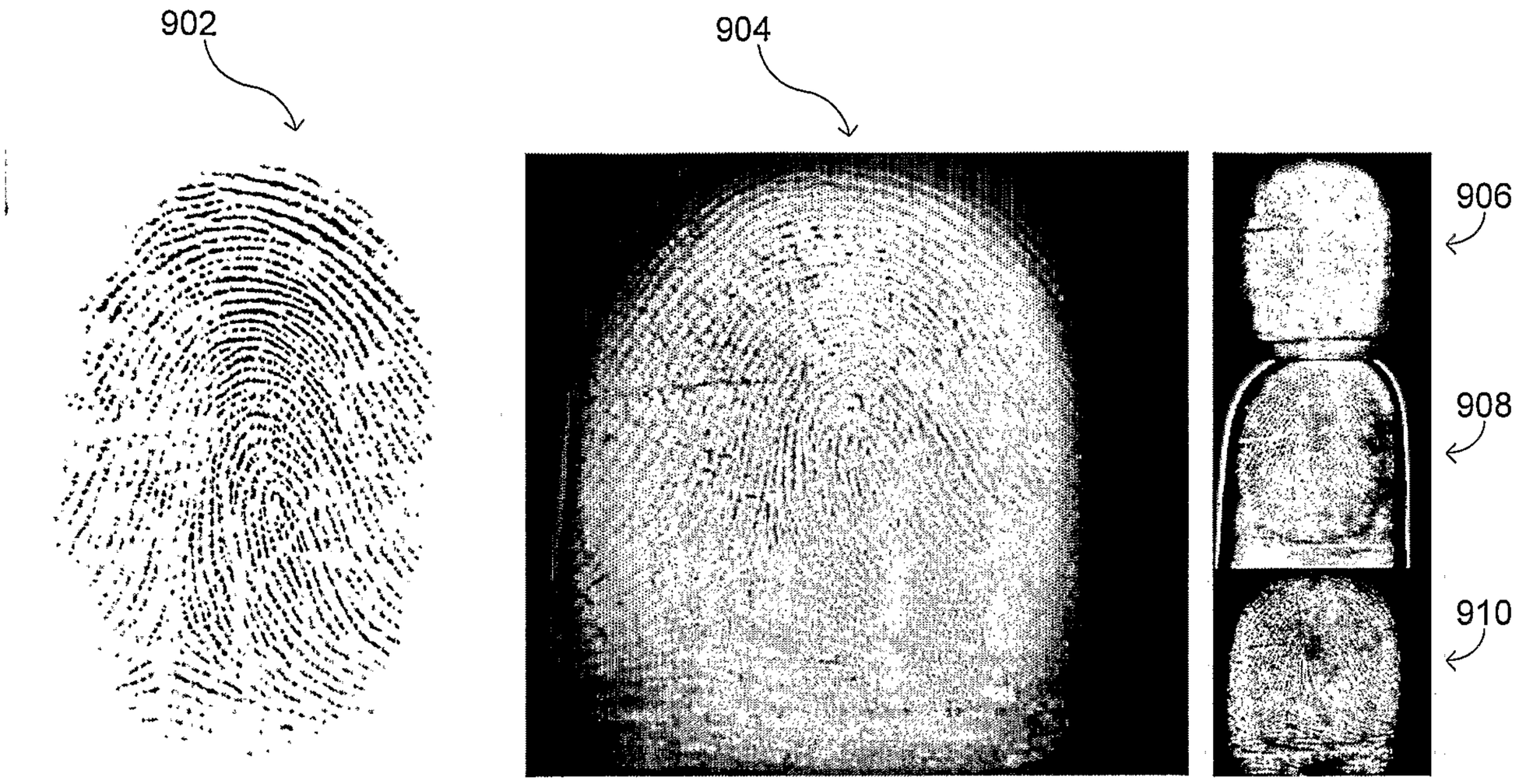

Conventional TIR
Extremely Dry Skin

Multispectral
(475, 500, 560, 576, 625 nm)

Fig. 9A

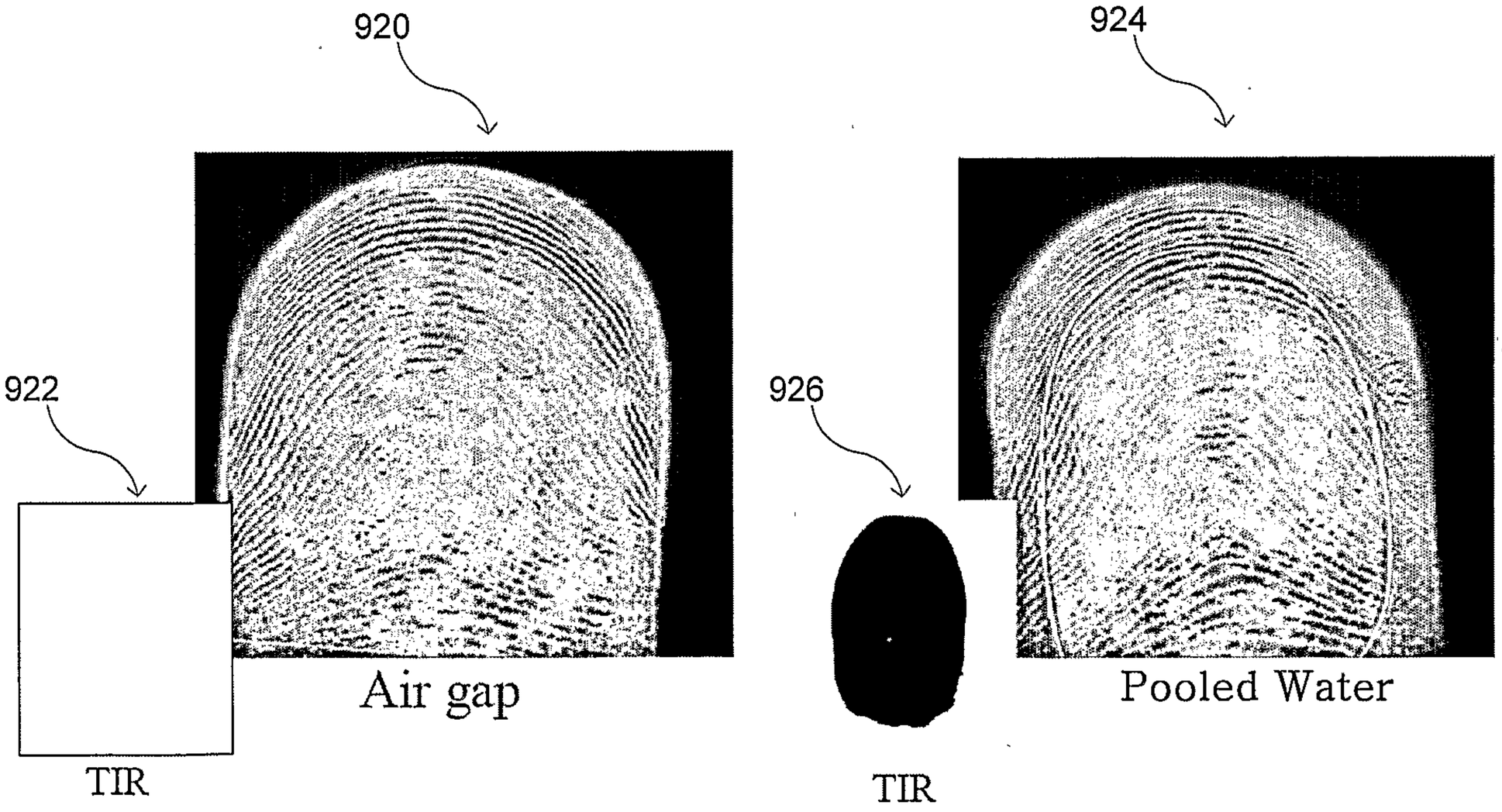

Fig. 9B

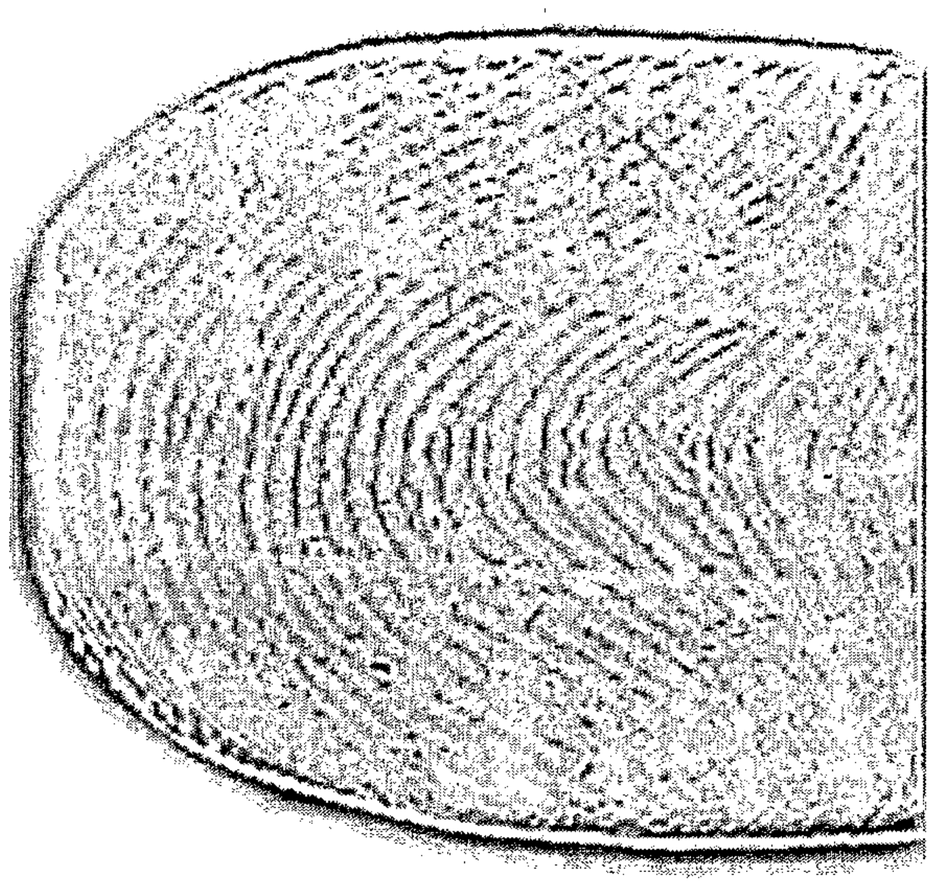

Fig. 10B



Fig. 10A

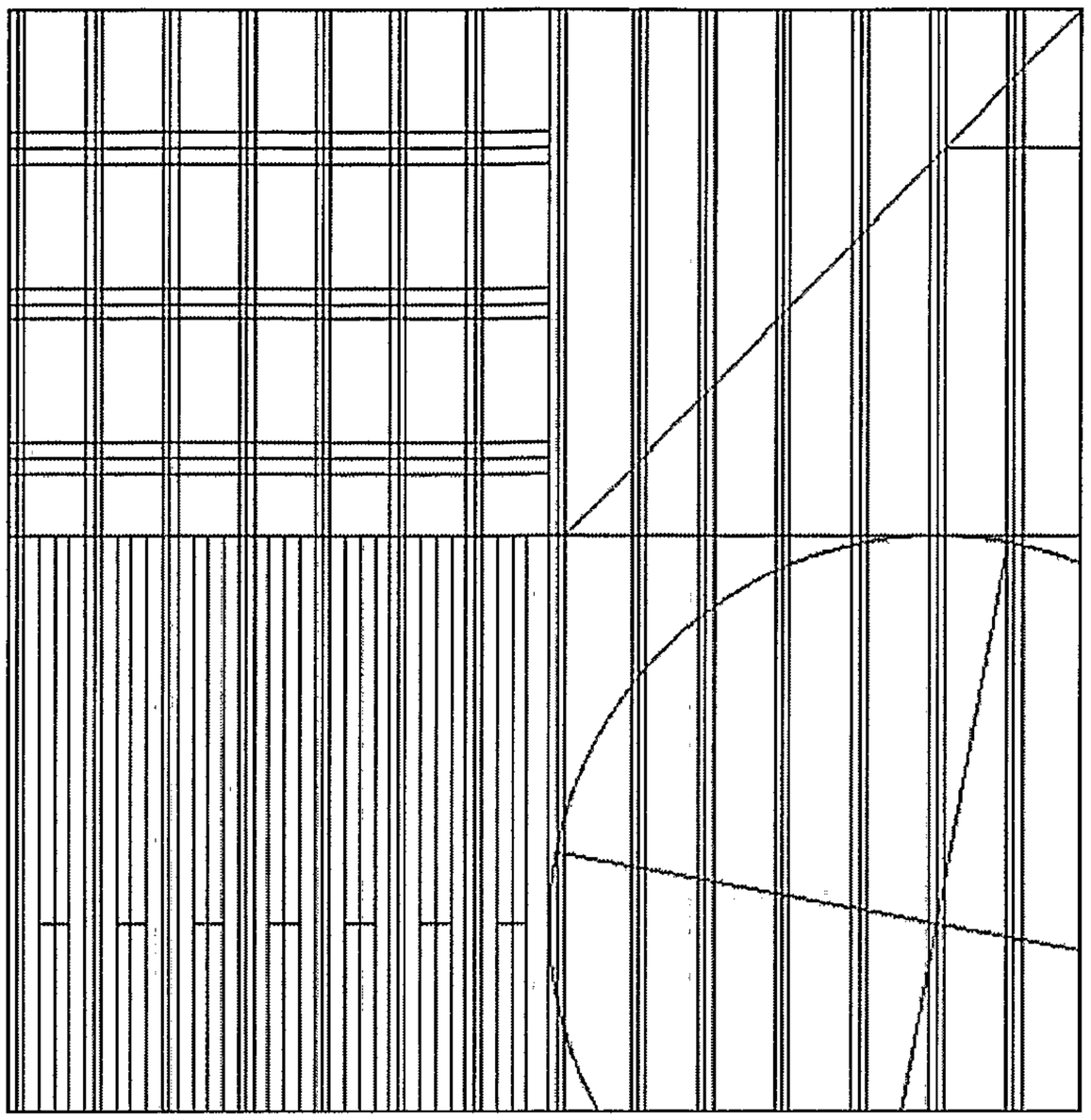

Fig. 11A

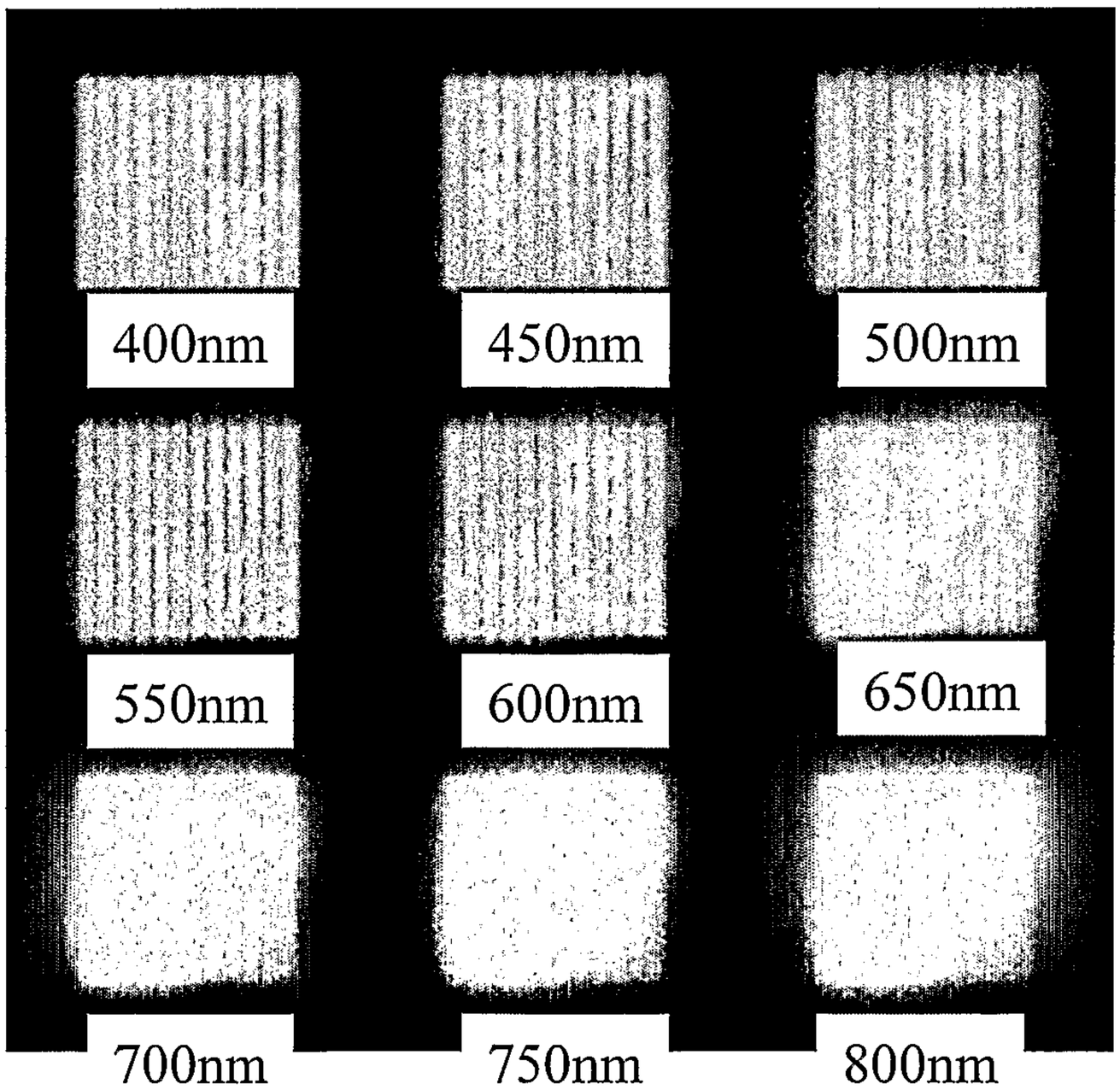

Fig. 11B

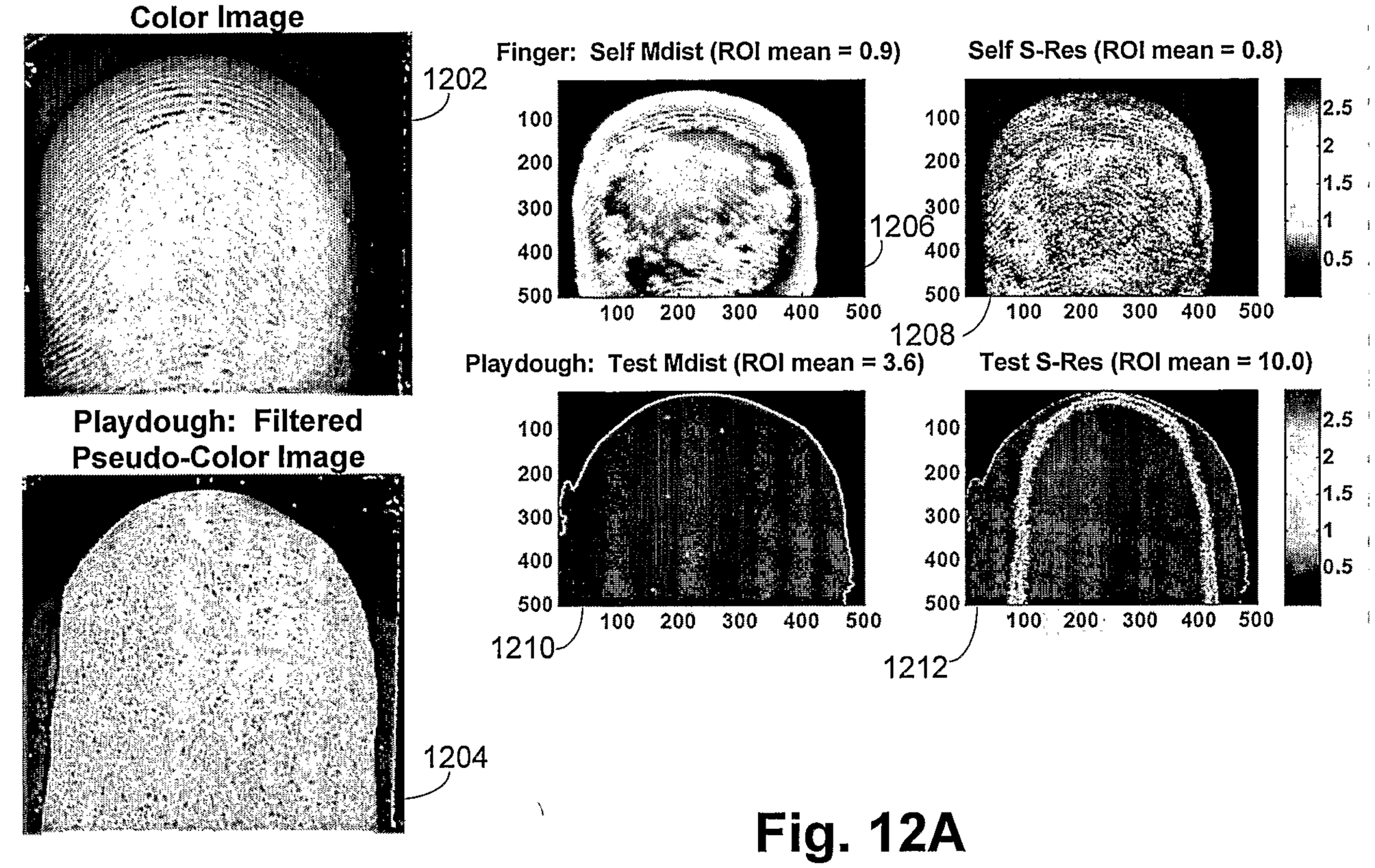

Fig. 12A

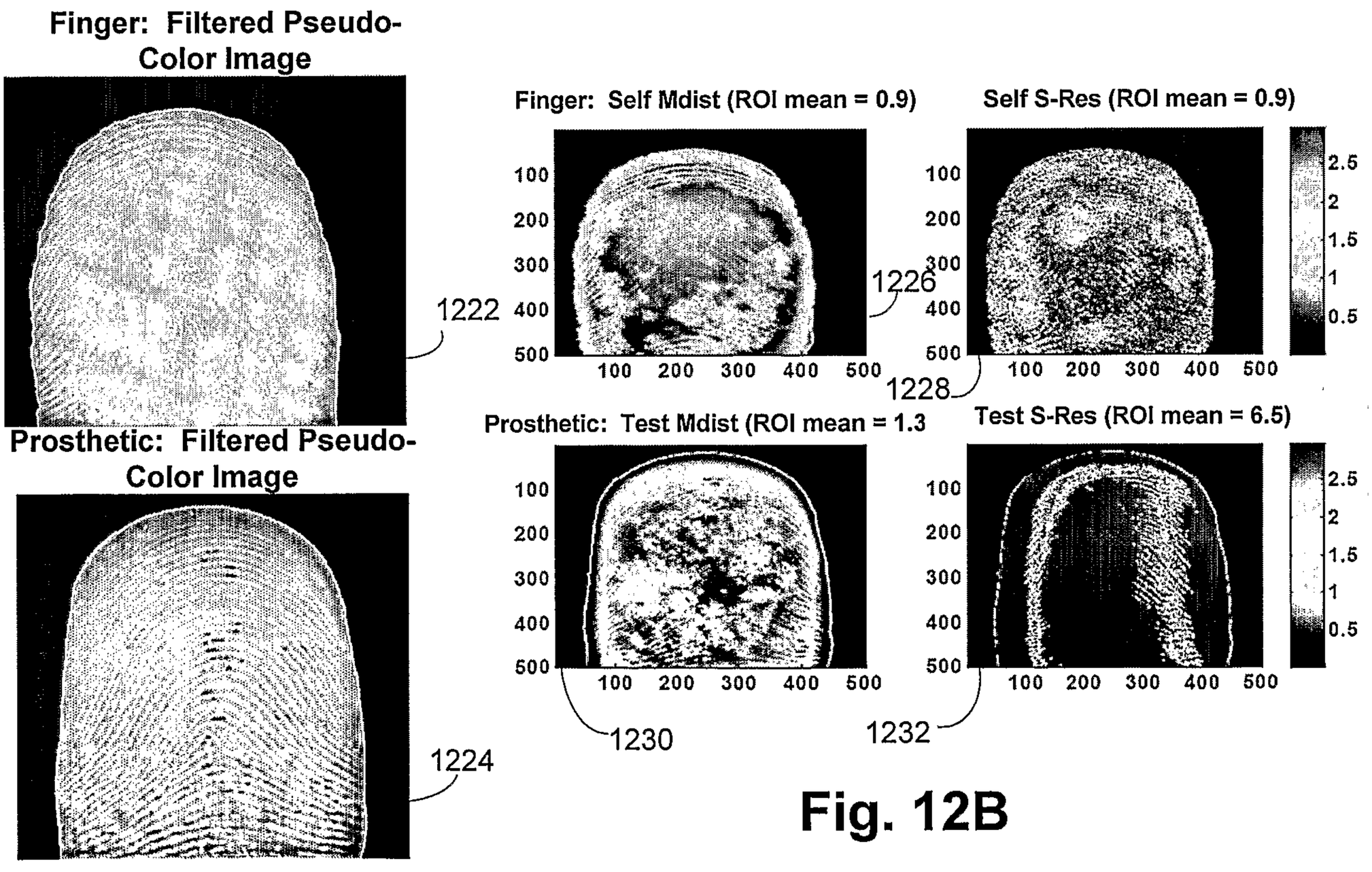

Fig. 12B

Real

B	G
R	

Finger: Color Panes

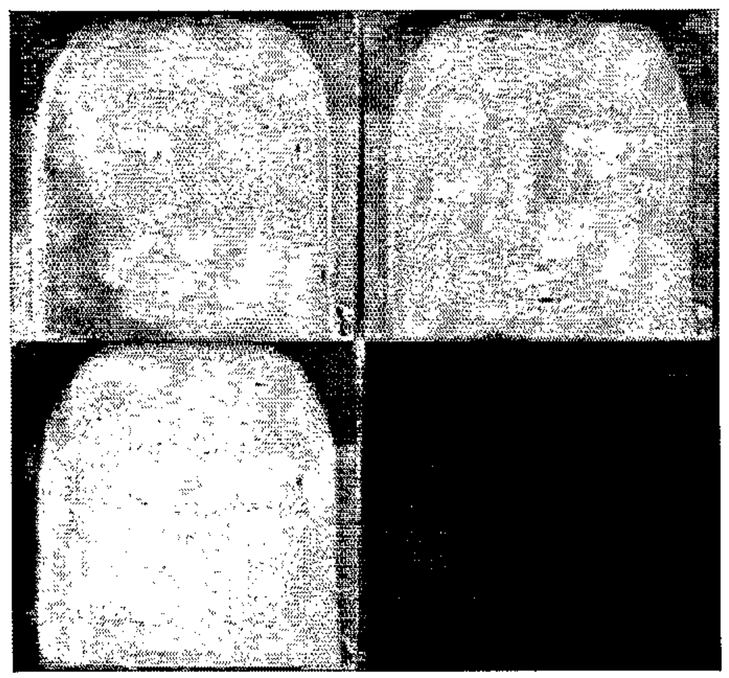

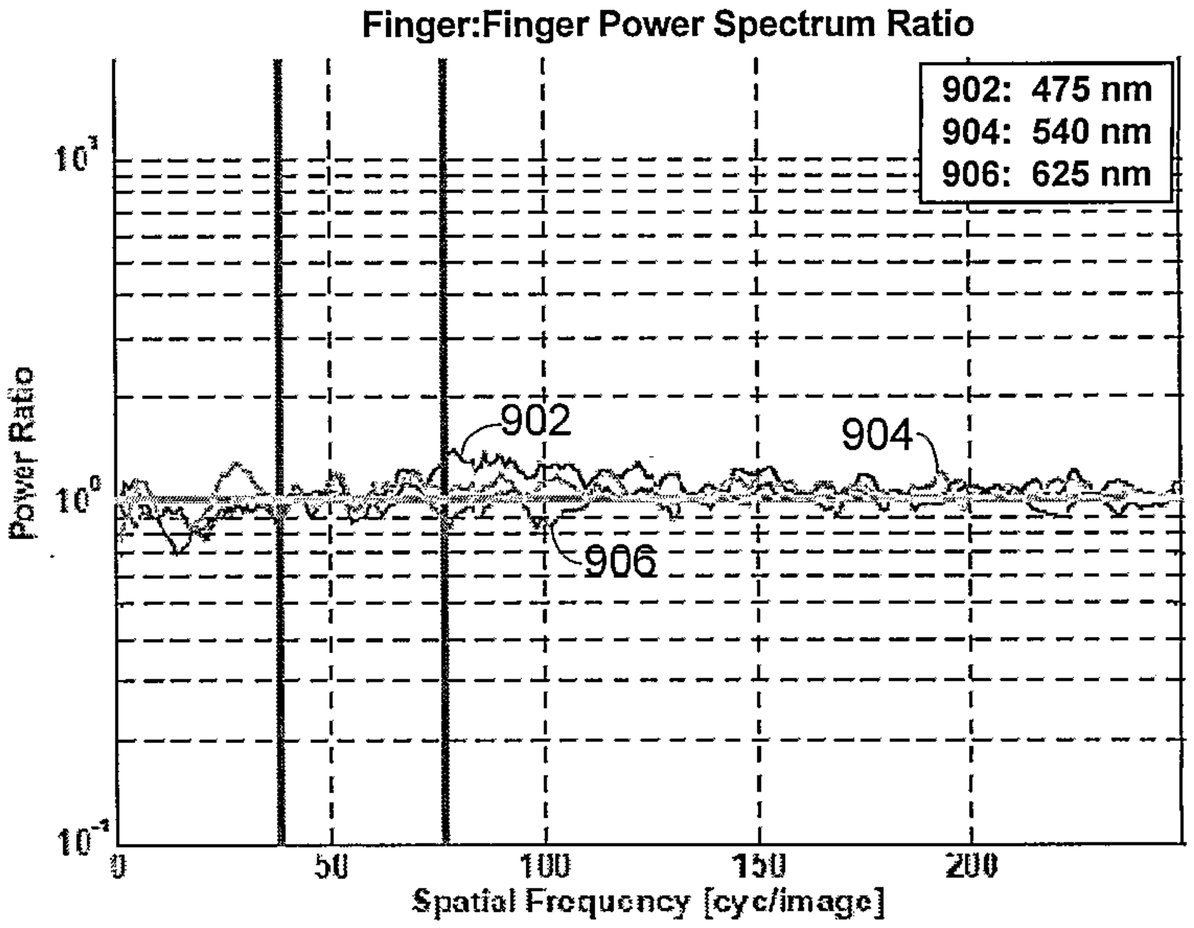

Prosthetic

B	G
R	

Prosthetic: Color Panes

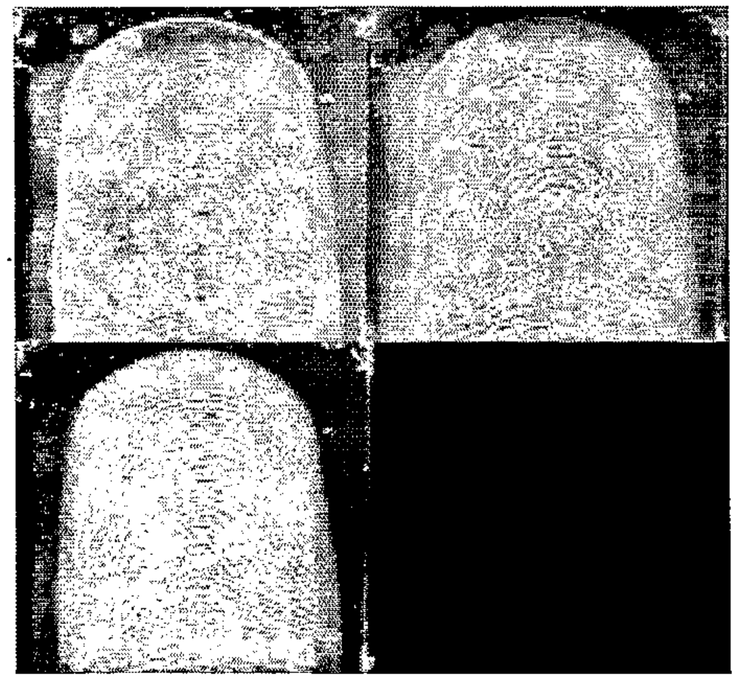

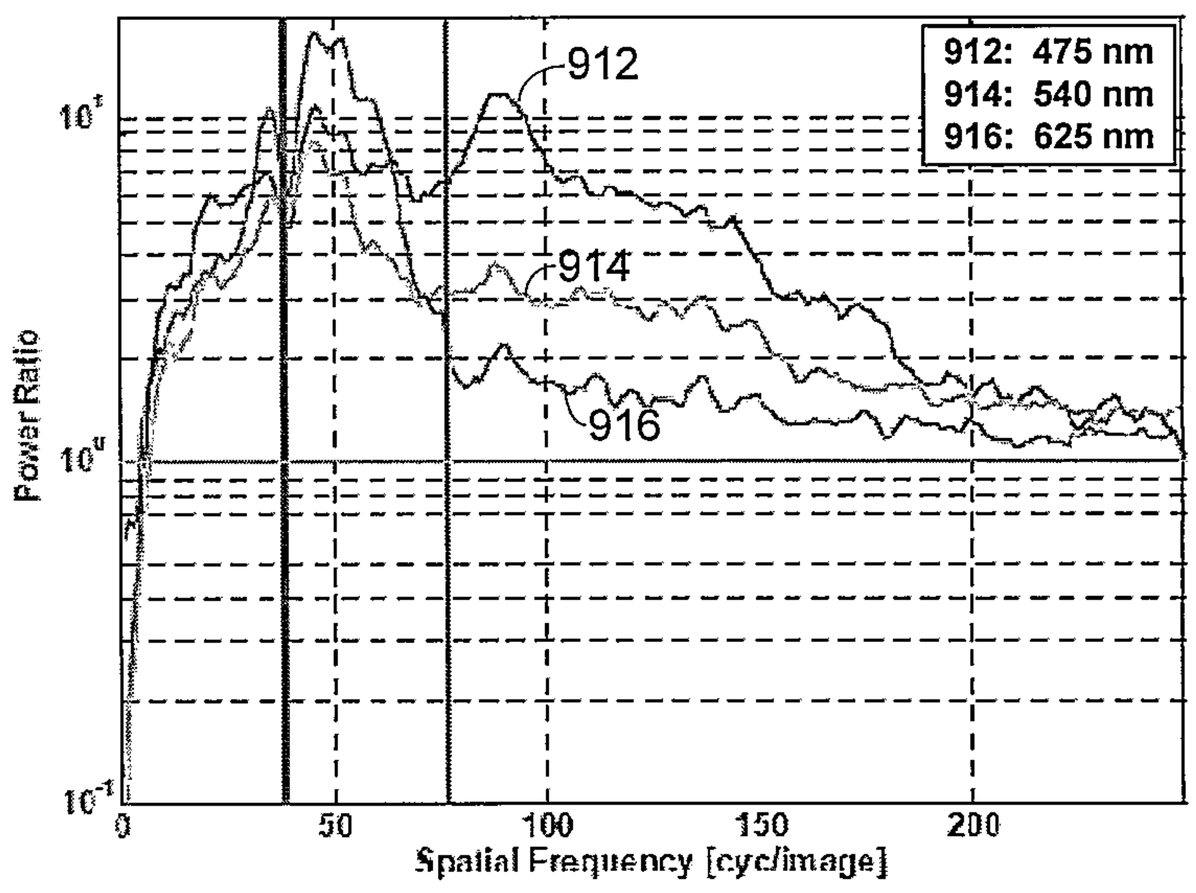

Fig. 13

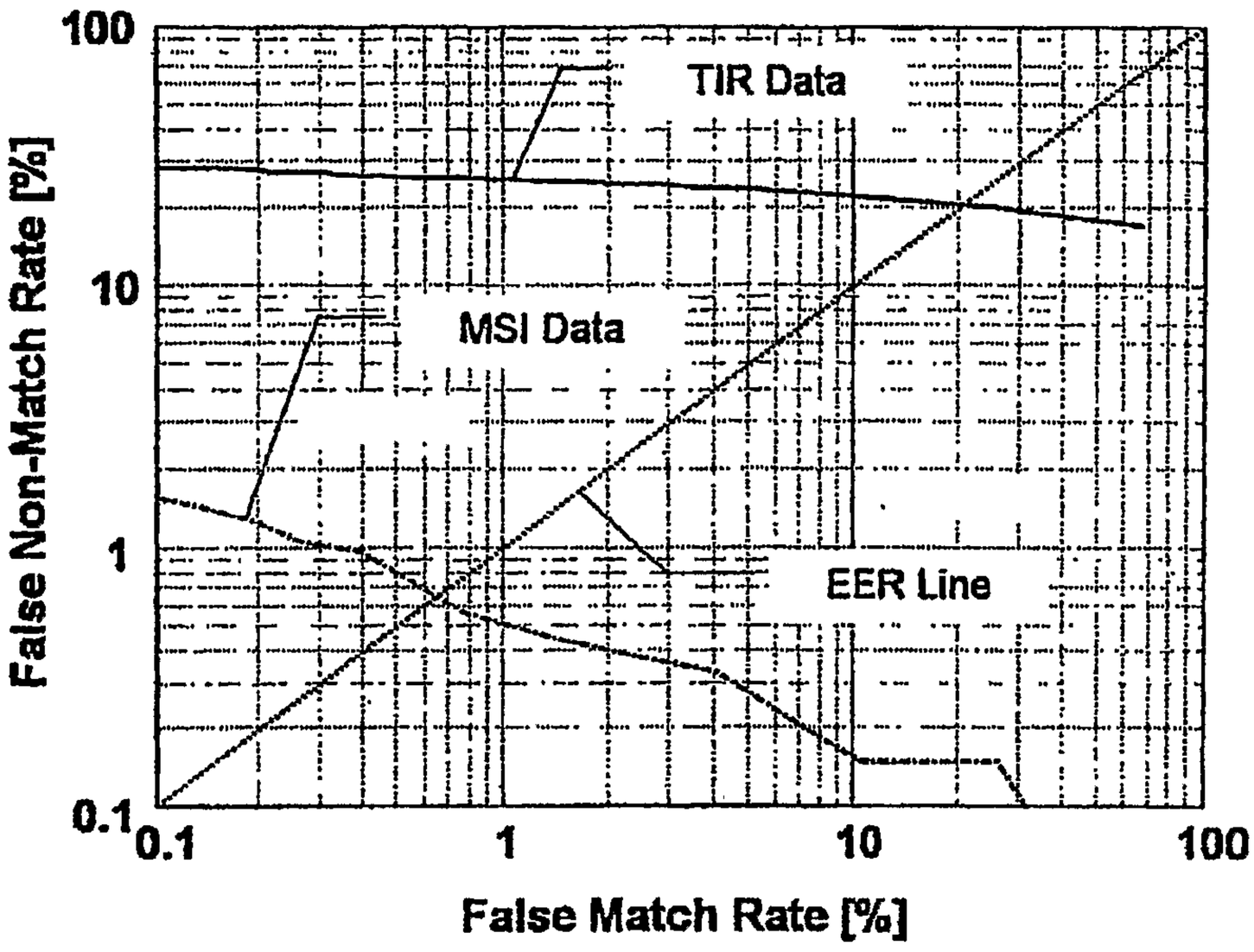

Fig. 14A

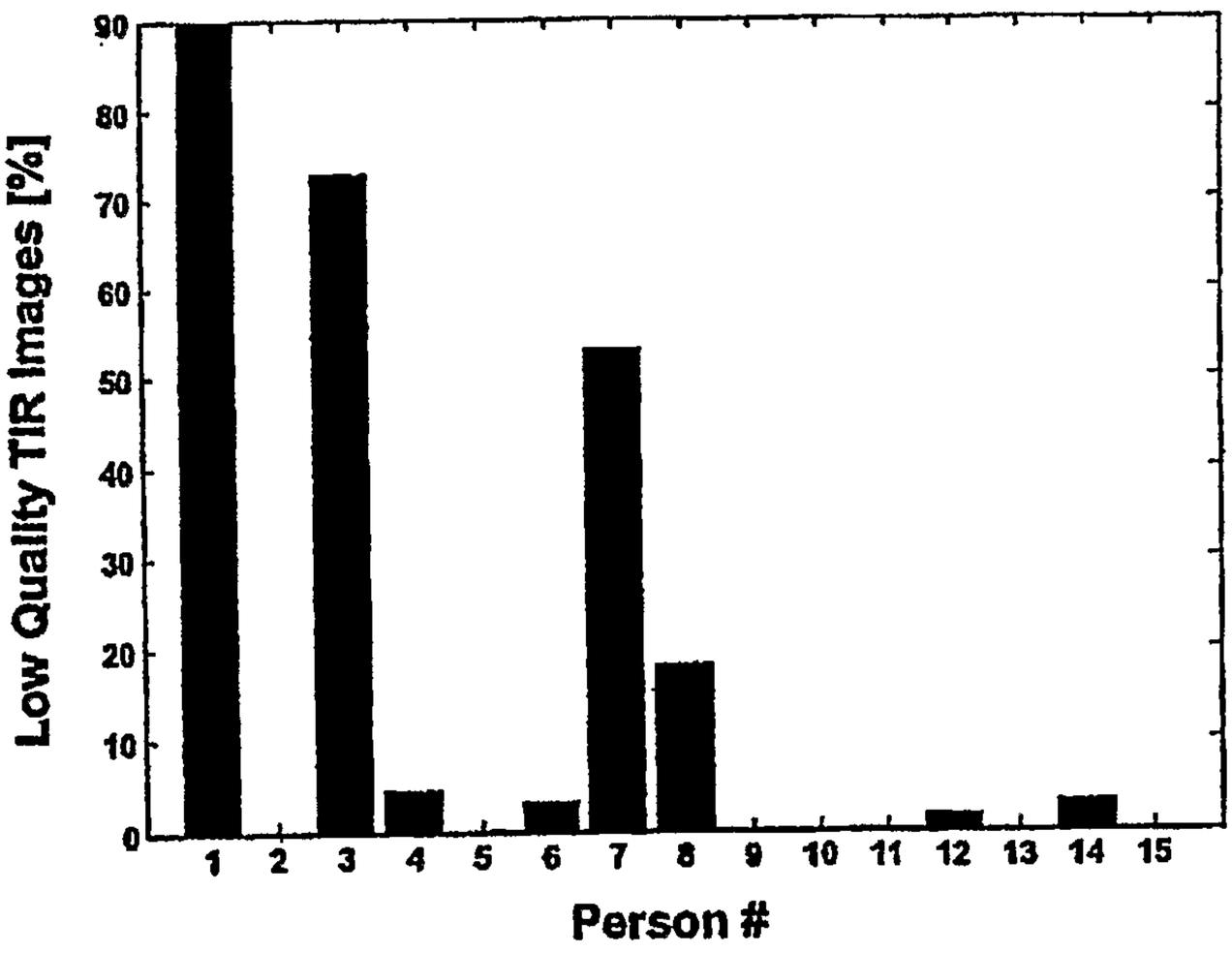

Fig. 14B

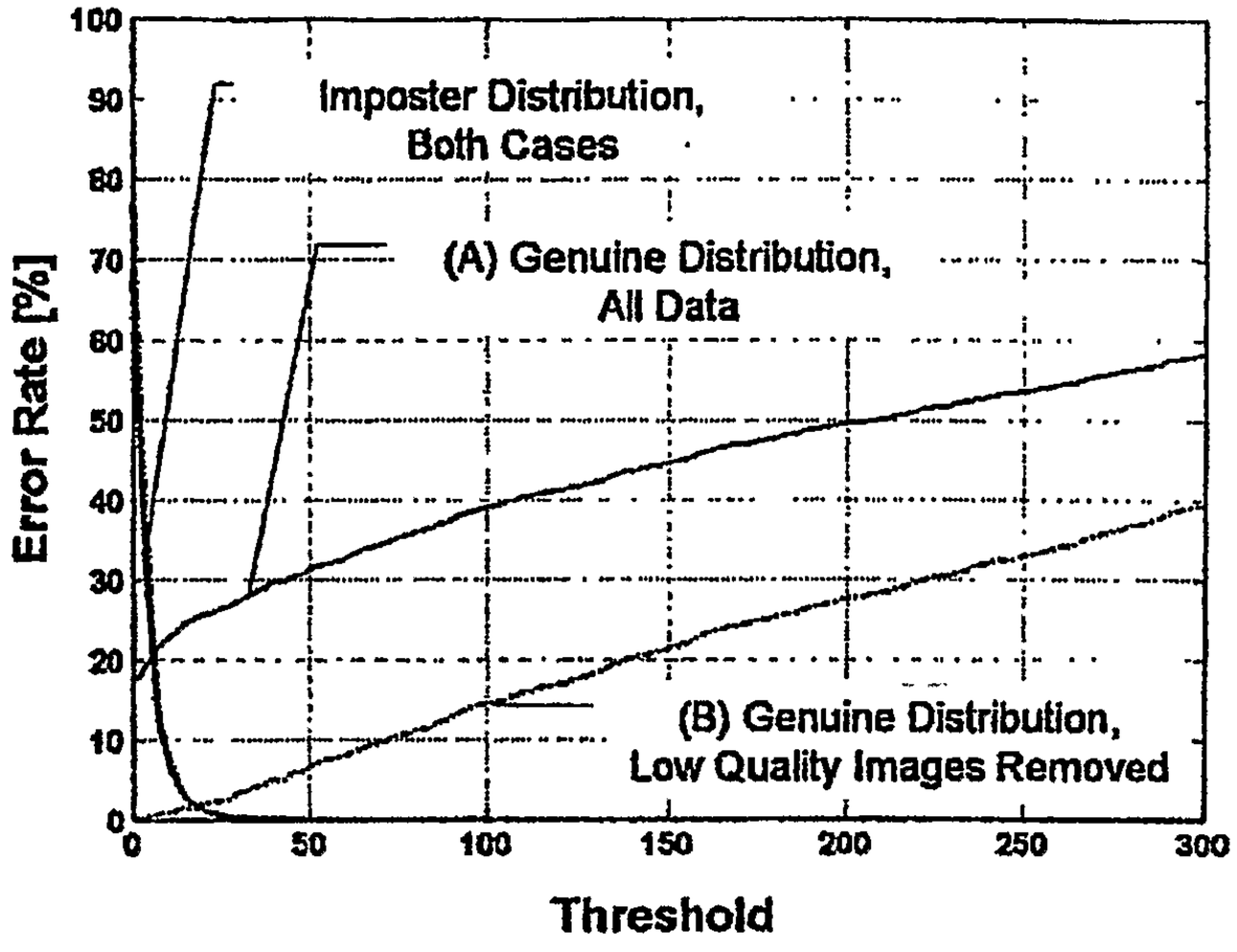

Fig. 14C

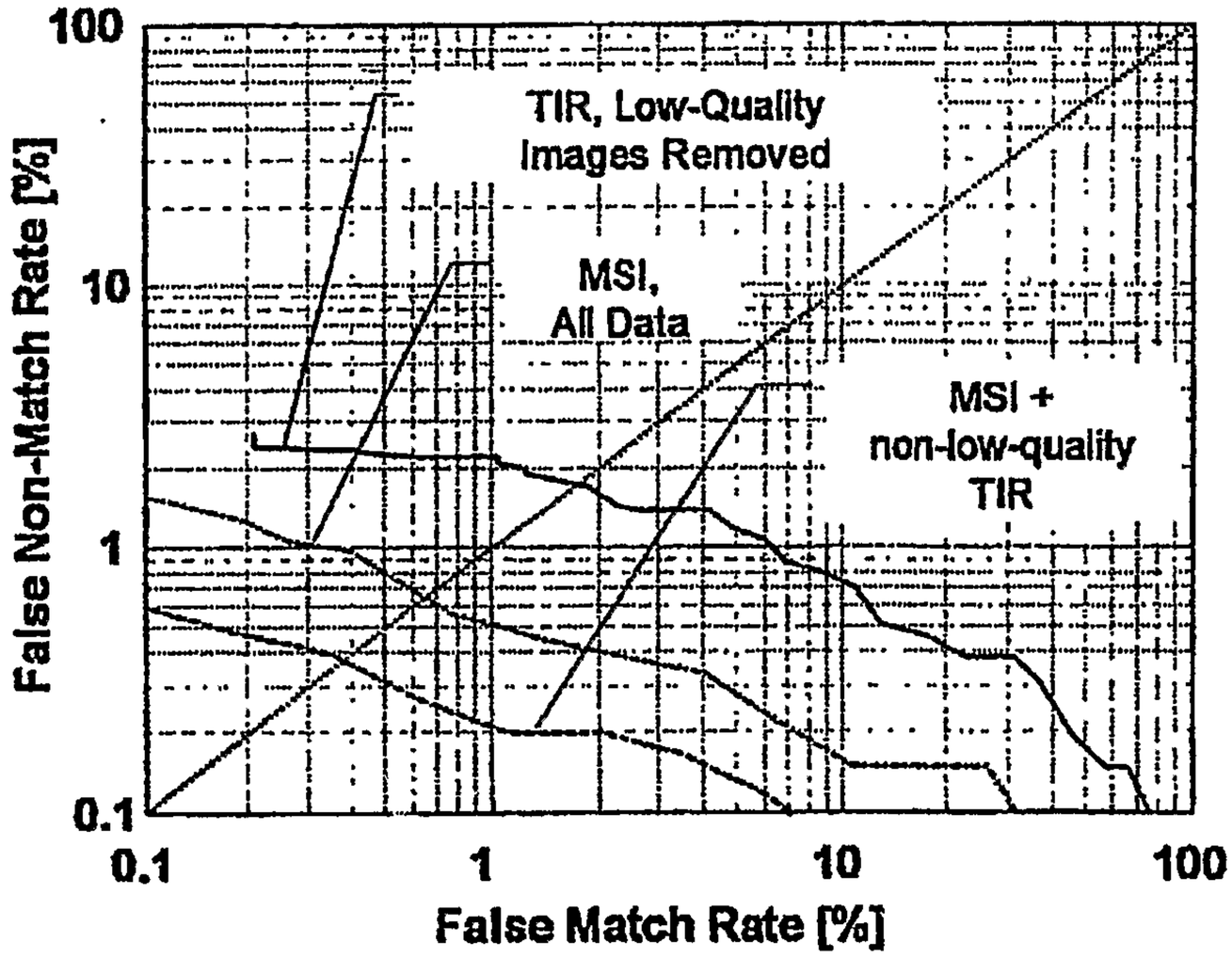

Fig. 14D

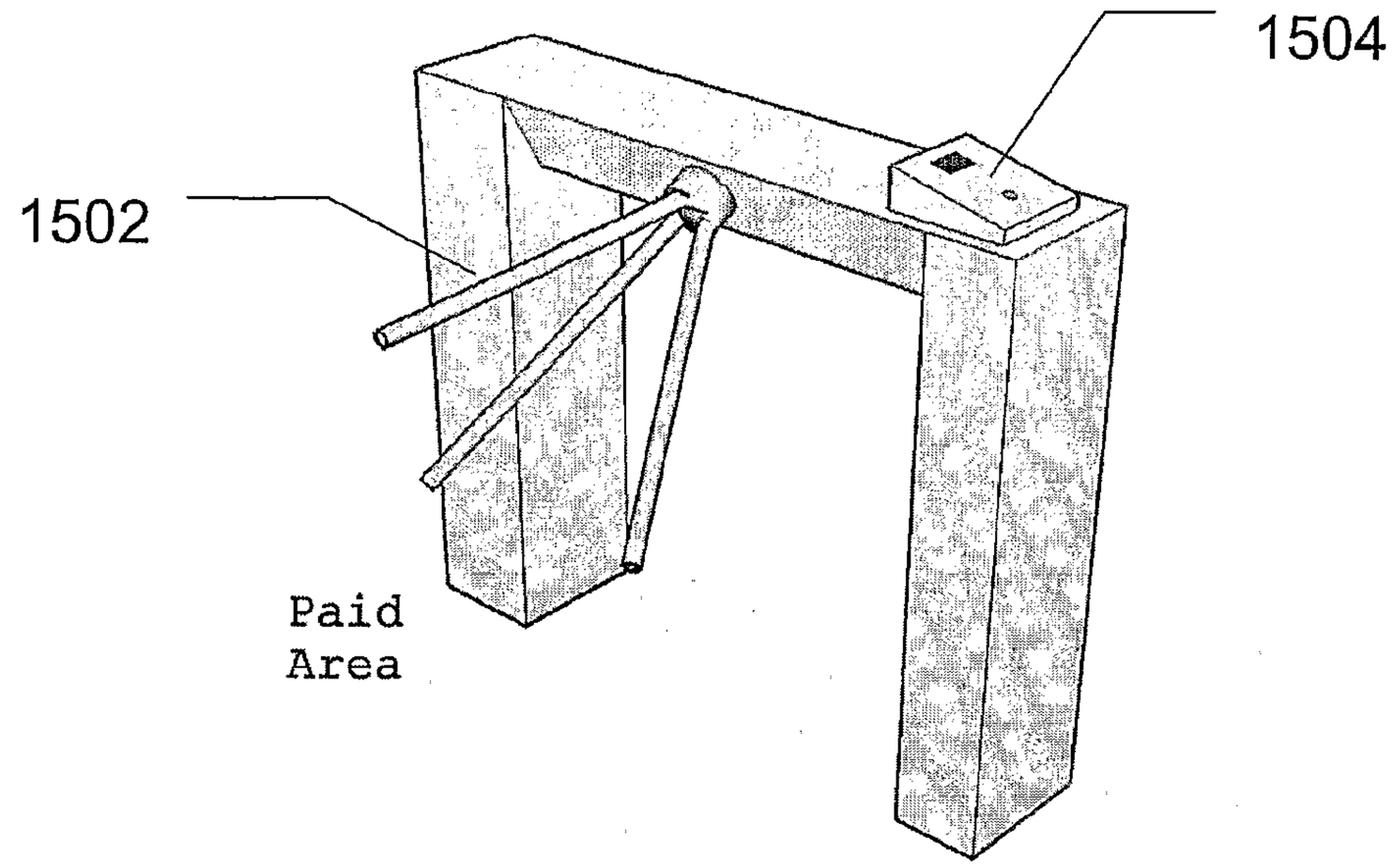

Fig. 15A

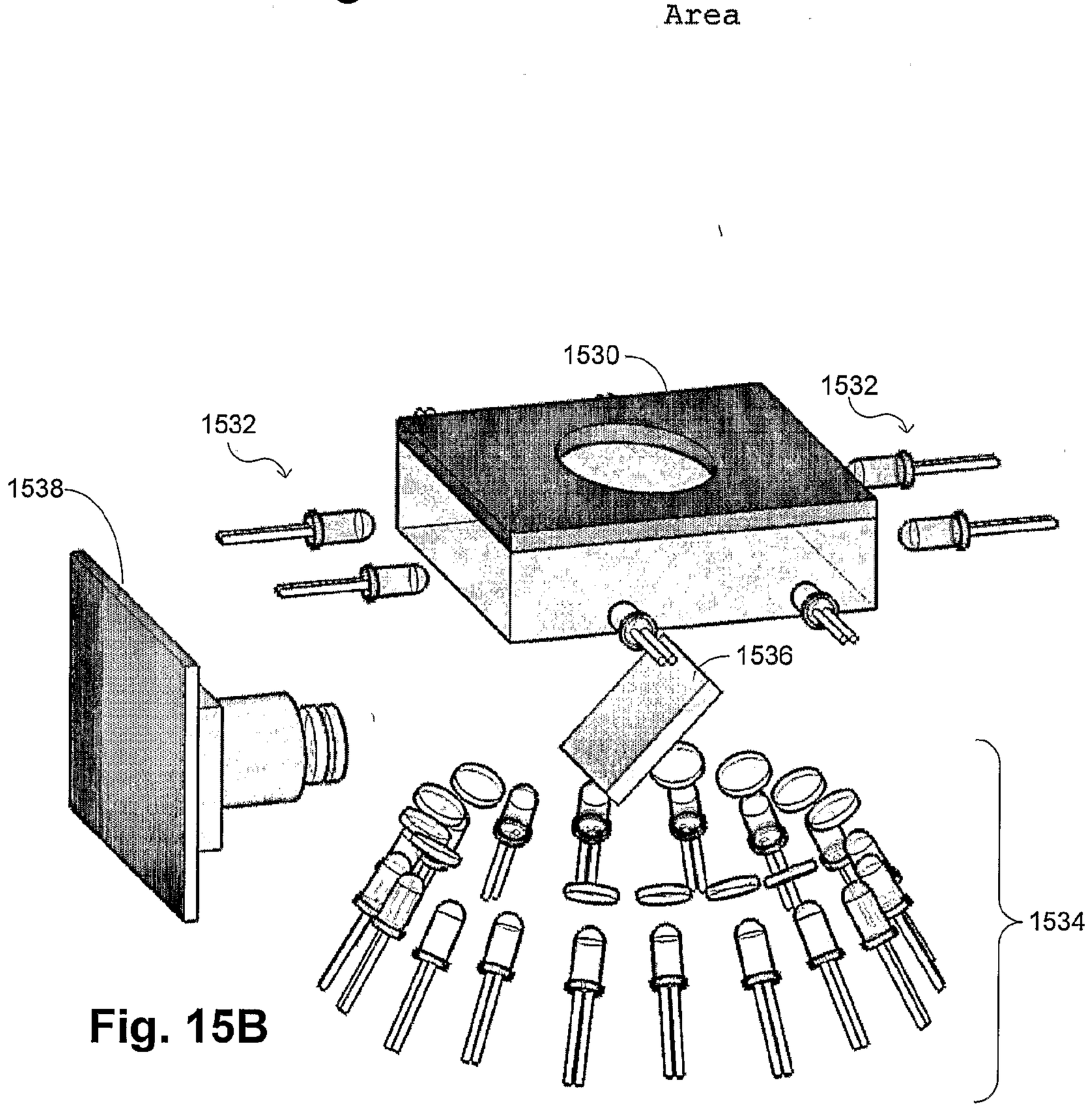

Fig. 15B

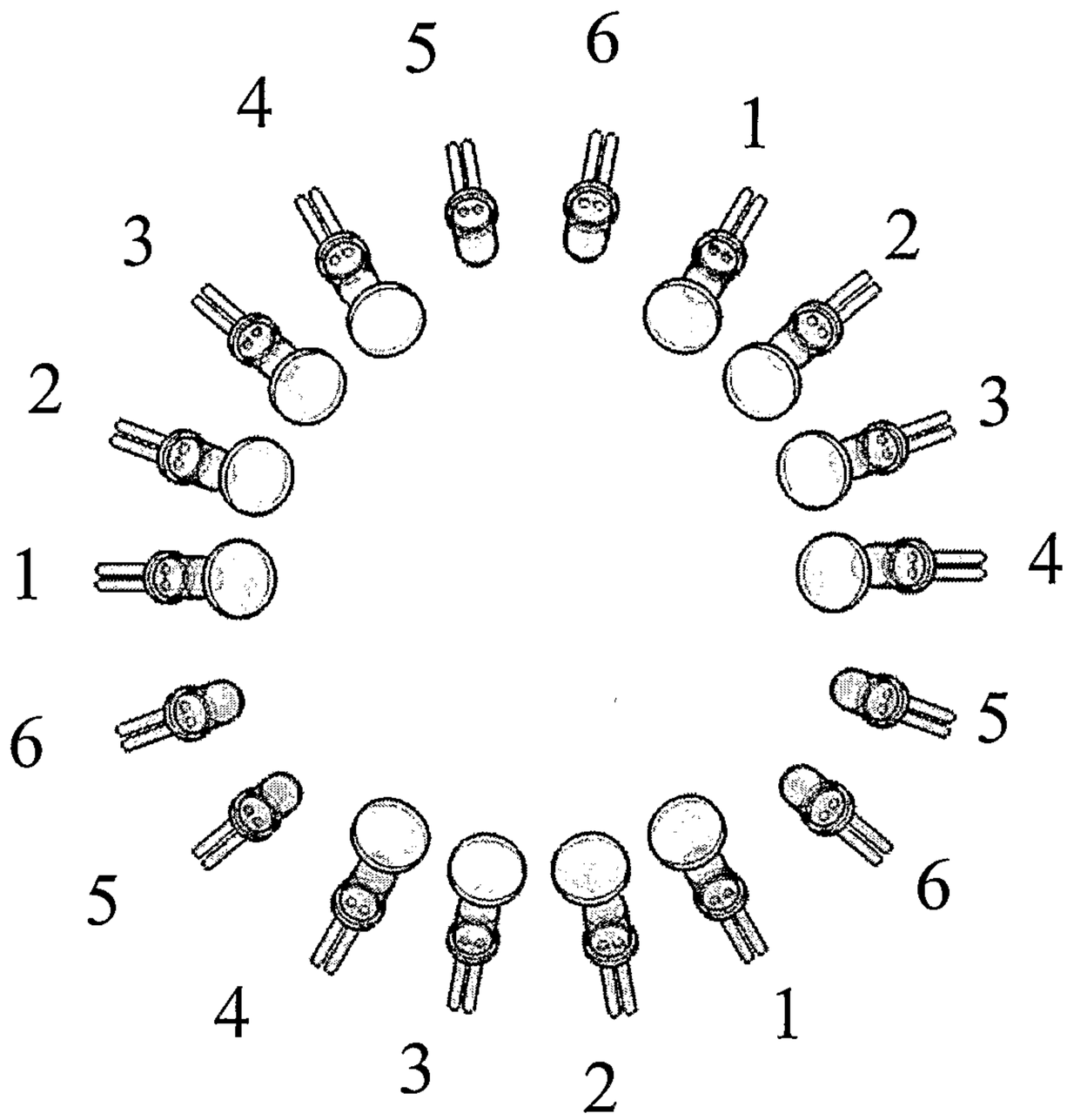

Fig. 15C

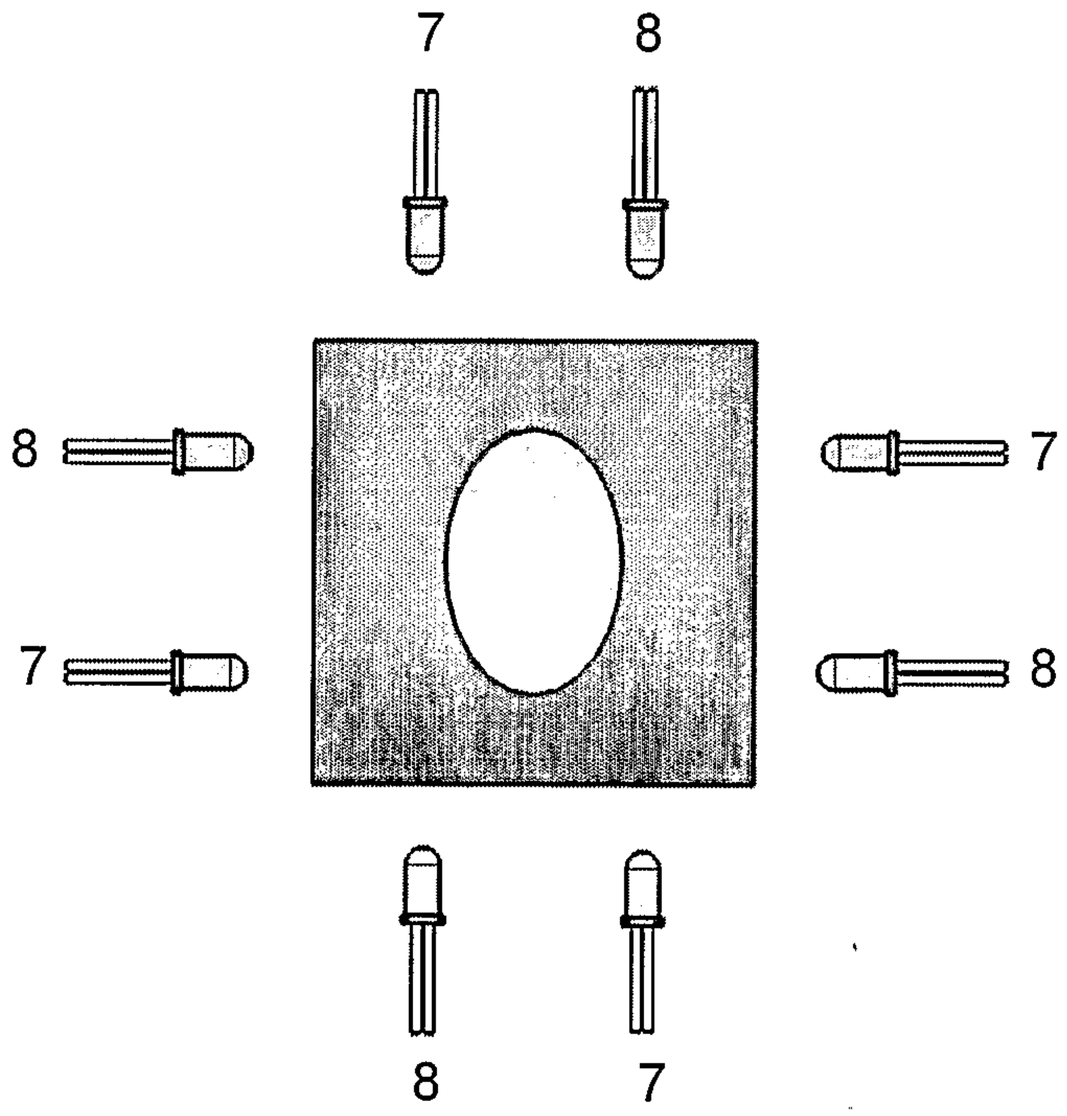

Fig. 15D

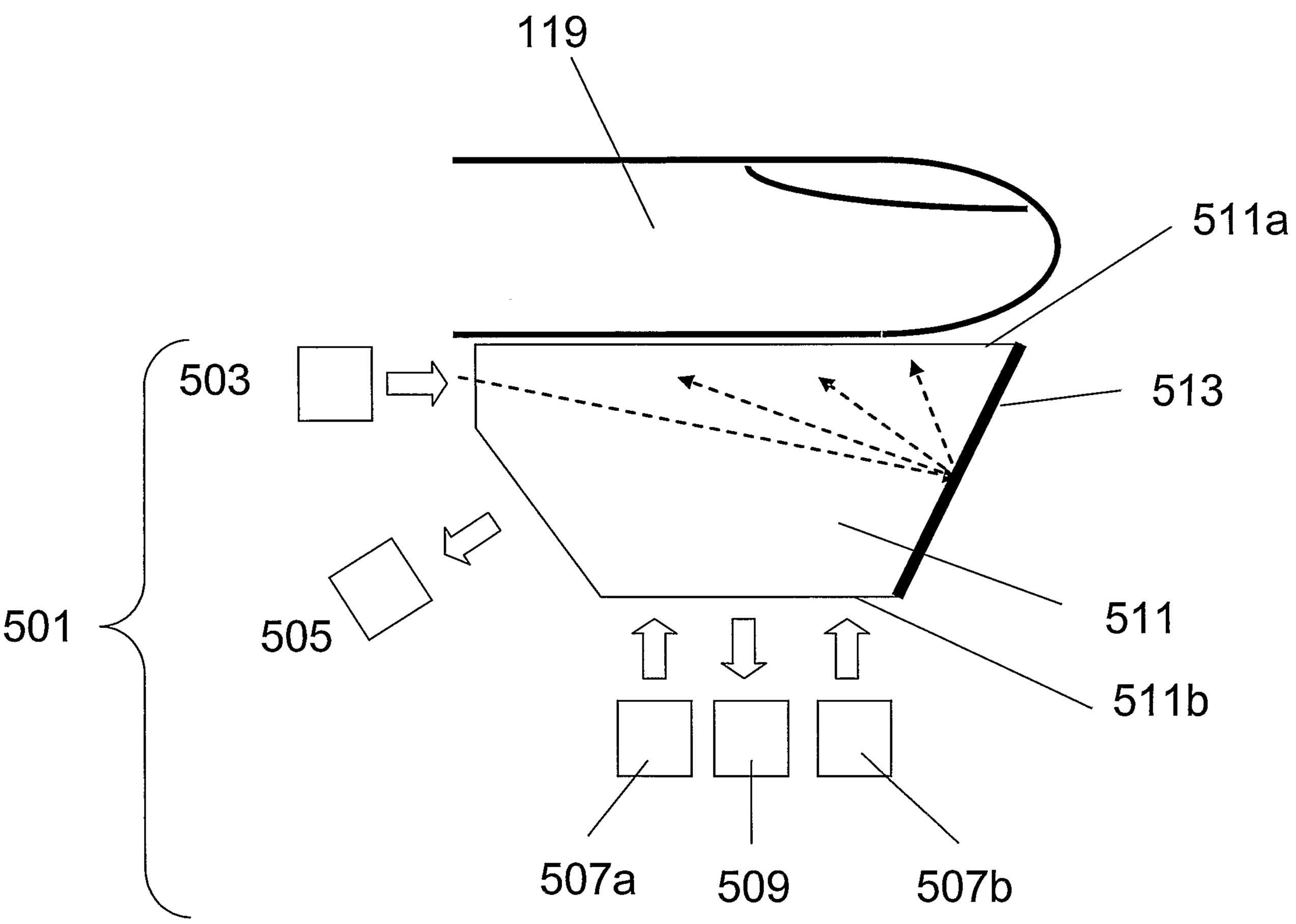
119
511a
503
513
501
505
511
511b
507a
509
507b