March 13, 1934. F. LUBBERGER 1,951,159

TELEPHONE SYSTEM

Filed Dec. 5, 1932 2 Sheets-Sheet 1

FIG. 1

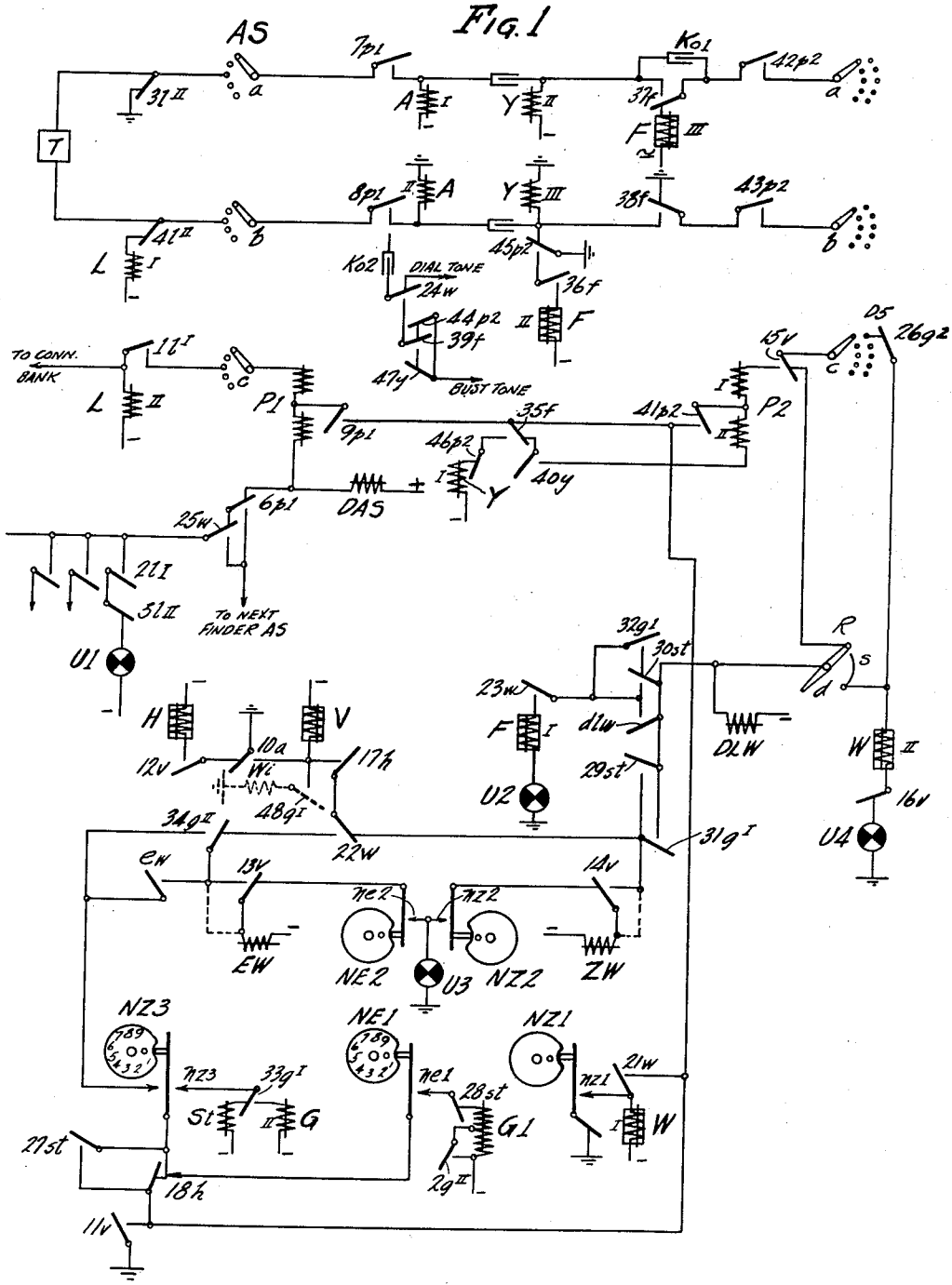

INVENTOR
FRITZ LUBBERGER

R. B. Richardson
ATTY.

March 13, 1934. F. LUBBERGER 1,951,159

TELEPHONE SYSTEM

Filed Dec. 5, 1932 2 Sheets-Sheet 2

FIG. 3

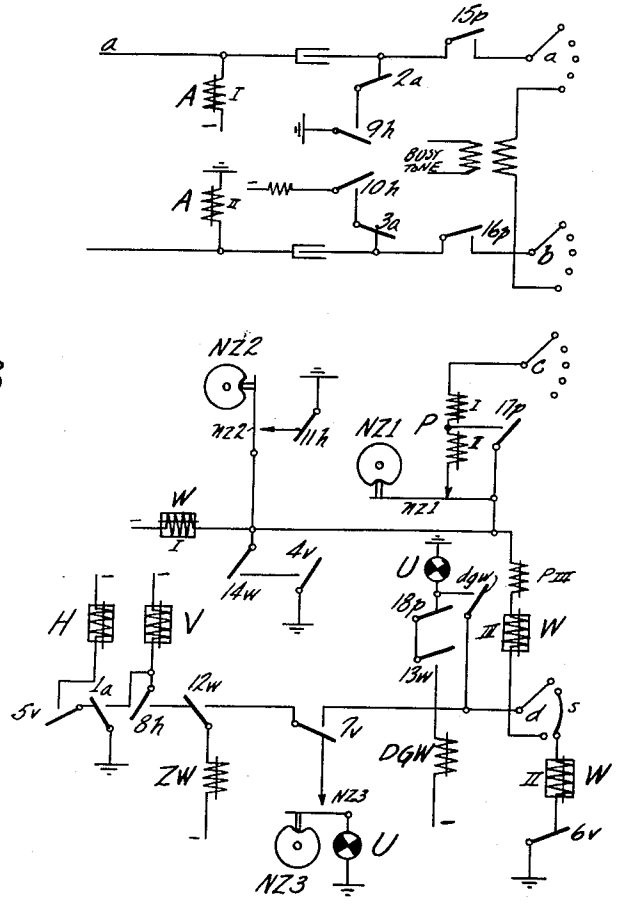

FIG. 2

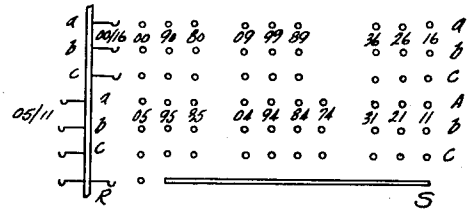

INVENTOR
FRITZ LUBBERGER

R. S. Richardson

ATTY.

Patented Mar. 13, 1934 1,951,159

UNITED STATES PATENT OFFICE

1,951,159

TELEPHONE SYSTEM

Fritz Lubberger, Berlin, Germany, assignor to Siemens & Halske Aktiengesellschaft, Siemensstadt, near Berlin, Germany

Application December 5, 1932, Serial No. 645,650
In Germany January 28, 1932

18 Claims. (Cl. 179—16)

The present invention relates to telephone systems in general and, more particularly, to circuit arrangements for connecting devices comprising setting and conversational switches where the outgoing lines are so arranged that each line of a line group accessible over junction lines is connected to successive contacts of a contact group. It has for its object to provide a satisfactory arrangement for such connecting devices, this being achieved by causing a setting switch associated with the conversational switch to receive impulses transmitted by a subscriber, to be set in accordance with said impulses to the first of the selected line group contacts and to determine the number of impulses required for setting the switch each time to the succeeding line of the same group.

The arrangement according to the invention, without the use of start conductors, facilitates the rapid and reliable setting of the conversational switches without having to provide complicated changeover devices in the impulse circuits. This is accomplished by using an exceedingly simple and reliable stepping switch as a setting switch. The contact groups may be increased or reduced without altering the setting switches. These switches have a uniform construction and, with the connecting devices, are used for group selection as well as line selection.

The various features of the invention will be discussed hereinafter, reference being had to the accompanying drawings comprising Figs. 1, 2, and 3. Fig. 1 shows a final selector, Fig. 2 shows the bank and wiper arrangement, Fig. 3 shows a group selector.

Referring now to Fig. 1, there is shown a final selector LW constructed as a rotary switch set by two digits. Its contact bank, which is shown in Fig. 2, comprises two sets of 50 contacts each provided with three laminations denoted *a*, *b*, *c*, and a segment S utilized for restoring the switch to normal. The segment extends over 49 contacts, whereas the 50th contact forms the normal contact R. The switch shaft which in the embodiment is caused to rotate by means of a stepping magnet carries two sets of wipers *a*, *b*, *c*. The wiper sets are spaced 180° apart and are separated by the height of three bank laminations so that one set brushes over contacts 00/16 and the other set over contacts 05/11. The shaft also carries a restoring wiper *d* brushing the restoring segment S.

The contacts have not been numbered in the usual way, as will be seen in Fig. 2. In each line group the connecting numbers having the same unit digit have been brought together thus: 09, 99, 89, 79 . . . 19, and therefore do not form the usual combination of having the tens units forming one group, i. e., 91, 92, 93 . . . 99, 90. The wipers brush the contacts in the order of the highest numbers first, thus starting with 09, then 99, 89, and so forth.

The system illustrated in the drawings accommodates 98 connections, as the resting positions 00 and 05 cannot be seized due to reasons to be explained in a later paragraph.

For the setting of the final selector LW to a definite contact two very simple stepping switches ZW (tens switch) and EW (units switch) are provided. They are adapted to complete one revolution upon taking 10 steps. The tens switch ZW is fitted with two cams NZ1, NZ2, each one of which opens a contact in its normal position and a further cam NZ3 which in its normal position throws over a changeover contact.

The units switch EW actuates two cams, NE1 and NE2, each one of which in its normal position opens a contact.

The operations involved in setting up a connection will now be described. When the subscriber T lifts his receiver, the line loop closing effected thereby causes in known manner an idle call finder AS to be set to the calling line. The line relay L which is a two-step relay is energized in its first stage over its winding I and the subscriber's line loop, thus actuating the first stage contacts 1*II* and 2*II* so that an interrupter U1 is connected to the rotary magnet DAS over: DAS, 6*p*1, 25*w*, 2*II*, 5*III*, U1,—battery. When the switch wipers of the call finder encounter the calling line, the test relay P1 operates, disconnects the rotary magnet by means of contact 6*p*1 and switches through the start line to the succeeding idle call finder AS over:—battery, LII, 1*II*, *c*-wiper of AS, both windings of P1, DAS, battery, earth. The line relay L is fully energized over winding II in this circuit and throws over its contacts 3*III*, 4*III* and 5*III*, thus disconnecting earth and winding LI from the subscriber's line and, at the same time, the interrupter from the start line. As soon as relay P1 on its energization closes its contacts 7*p*1 and 8*p*1, the feeding bridge relay A for the calling subscriber operates over:—battery, A1, 7*p*1, *a*-wiper of AS, subscriber's line loop, *b*-wiper of AS, 8*p*1, AII, earth, and closes the following circuit for the slow-acting relay V:—battery, V, 10*a*, earth. Relay V actuates its contacts 11*v*—16*v*. The subscriber's line is guarded in the usual manner over contacts 11*v* and 9*p*1 against further seizure due to the high-resistance winding of relay P1 being short-cir-

cuited. The exchange signal or dial tone is transmitted to the subscriber over contact 8*p*1.

The subscriber is now in a position to commence dialling. It will be assumed that he wishes to set up a connection with the subscriber having been allocated the call number 74. Relay A operates intermittenly during the impulse transmission. On its release it causes relay H to operate and to throw over its contacts 17*h* to 19*h*: battery, H, 12*v*, 10*a*, earth. Both relay H and relay V are slow-acting relays and consequently do not relapse during the impulse transmission. When relay A is re-energized after its first release, contact 10*a* closes a circuit for the magnet ZW of the tens switch, causing this switch to execute a step due to the following circuit: battery, ZW, 14*v*, 22*w*, 17*h*, 10*a*, earth. In accordance with the 7 circuit breakings resulting from the first digit sent, relay A releases seven times and on each reenergization advances the cams of the switch ZW one step so that at the end of the first impulse series this switch has been advanced 7 steps. Another three steps therefore remain before it has completed a revolution. When the slow-acting relay H then releases in the pause following upon the first impulse series, it closes by means of contact 19*h* the following circuit for winding I of relay W: battery, WI, contact *nz*1, 19*h*, earth. Contact 21*w* closes the following locking circuit for relay W: battery, WI, 21*w*, 11*v*, earth.

Contact 24*w* cuts off the exchange signal from the subscriber's line and prepares a circuit for the subsequent transmission of the busy signal. Contact 22*w* carries out the switching-over operation which sets the units switch in a position to receive the succeeding impulse series. At the same time as relay W is energized, relay *St* is caused to operate over: battery, *St*, 33*g*1, *nz*3, 18*h*, 11*v*, earth, and throws its contact 27*st* in parallel with 18*h* so that it remains energized during the transmission of the second impulse series.

Meanwhile the subscriber transmits the second impulse series which causes the units switch EW to advance its cams 4 steps over: battery, EW, 13*v*, 34*g*II, 22*w*, 17*h*, 10*a*, earth.

The final selector commences its setting operation immediately upon the energization of *St* at the end of the first impulse series. It executes three steps: battery, DLW, 30*st*, 23*w*, FI, interrupter U2, earth. Winding I of relay F has a low resistance and does not prevent the operation of DLW. Relay F also is energized in this circuit. As will be explained later, it is necessary for the test operation of LW that relay F is energized. Simultaneously with DLW the magnet of the tens switch ZW receives impulses from the interrupter U2 over: battery, ZW, 14*v*, 29*st*, 30*st*, 23*w*, FI, U2, earth, and consequently rotates its cams. The tens switch has been restored to its original position after three steps and in this position contact *nz*3 is thrown over and relay *St* disconnected. The release of relay *St* stops further impulses to DLW at 30*st*. Contact *dlw* which is closed on each energization of DLW has been provided to prevent an impulse mutilation on the release of relay *St*. The wipers of LW have thus been set to the final selector contact denoted 70′ (see Fig. 2).

If, in the meantime, the units impulse series has ended, relay G is able to operate in its first stage over winding I: battery, GI, 28*st*, *ne*1, 18*h*, 11v, earth. It actuates its contacts 31—33*g*1 and thereby closes a fresh circuit for the final selector magnet DLW and the tens switch magnet ZW: battery, DLW, 30*st*, 32*g*1, 23*w*, FI, U2, earth; and battery, SQ, 14*v*, 31*g*I, 30*st*, 32*g*1, 23*w*, FI, U2, earth.

The final selector LW now takes 10 further steps while the tens switch completes a revolution. Contacts *nz*1—*nz*3 are thrown over on the first step of ZW, thus causing a circuit to be closed in which relay G is energized in its second stage over its winding II: battery, GII, 33*g*I, *nz*3, 18*h*, 11*v*, earth. It now actuates its contact 34*g*II and thereby prepares a circuit for magnet EW which is closed as soon as the tens switch has completed a revolution and thrown over its contact *nz*3 on reaching its normal position. The final selector at the same time executed 10 rotary steps so that its wipers now are set to the bank contact denoted by 79 (compare Fig. 2). The following circuit for EW is closed in the normal position of the tens switch: battery, EW, 13*v*, 34*g*II, *nz*3, 18*h*, 11*v*. The units switch moves one more step and therefore reaches the 5th contact. At the same time relay G is restored to its first stage due to the circuit for GII being cut off at *nz*3. A contact 20*g*II which short circuits a portion of winding G1 causes relay G to release with slow action thus, meanwhile permitting EW to be energized. Contact 34*g*II is then thrown over and so as to prevent the impulse for EW from being multilated, the circuit for EW is on its energization maintained over the closed contact *ew* until cut off at *nz*3. The final selector LW is now advanced a further 10 steps while the tens switch completes another revolution. The final selector wipers are then set to contact 78, the units switch takes a further step to position 6, the final selector again advances 10 steps and reaches contact 77, whereupon the units switch is set to position 7. An additional 10 steps are executed by the final selector LW where the wipers brush contact 76, the units switch moves to position 8, LW to contact 75 and the units switch finally to position 9. After a further 10 steps the LW has been set to contact 74, i. e., the dialled call number. At this moment the units switch takes another rotary step so that it reaches its zero position, whereupon contacts *ne*1 and *ne*2 are opened and the circuit for relay GI cut off with the result that no further impulses are transmitted to the LW magnet. As indicated above, relay F was energized over its winding I in the rotary circuit for the LW magnet during the rotary movement and contact 35*f* therefore has closed the following circuit for the called subscriber's feeding bridge relay: battery, Y1, 46*p*2, 35*f*, 11*v*, earth.

Relays F and Y are energized at the end of the rotary movement and after the setting has been completed to the called subscriber's number. The slow-acting relay F releases after a short period and at contact 35*f* closes the test circuit for the test relay P2 of LW. Relay Y is energized momentarily and, although contact 35*f* opens the locking circuit for YI, due to winding YIII being short circuited by contact 45*p*2, the relay releases with slow action. This slight difference in the release periods between relays F and Y constitutes the test period for LW. If the required subscriber's line is idle the test relay P2 can be energized over: battery, LII of the called line, *c*-wiper of LW, 15*v*, windings I and II of P2, 40*y*, 35*f*, 11*v*, earth. Contact 41*p*2 guards in the usual manner by short circuiting winding II. Contact 44*p*2 is opened and prevents the transmission of the busy signal (the circuit for the

busy signal device was opened by contact 39*f* during the dialling). Contacts 42*p*2 and 43*p*2 switch through the called subscriber's line to contacts 37*f* and 38*f* over which ringing current is applied over: earth, battery, alternating current generator, FIII, 37*f*, 42*p*2, *a*-wiper of LW, subscriber's line loop, *b*-wiper of LW, 43*p*2, 38*f*, earth. Contact 37*f* is bridged by a small condenser Ko1 over which a small portion of the ringing current reaches the calling subscriber so that he can hear the called subscriber being called. Relay F, however, is energized by direct current only and consequently is controlled by the switch hook in known manner. As soon as the called subscriber answers, a direct current circuit is completed and relay F is energized over: battery, FIII, 37*f*, subscriber's line loop, 38*f*, earth. By means of winding II and contact 36*f*, relay F is placed in the following locking circuit: battery, FII, 36*f*, 45*p*2, earth. Contacts 37*f* and 38*f* now switch through the subscriber's line loop completely so that the conversation can commence. The battery feeding for the called party and the control on the replacement of the receiver is now taken over by windings II and III of relay Y: battery, YII, 37*f*, 42*p*2, *a*-wiper of LW, subscriber's line loop, *b*-wiper of LW, 43*p*2, 38*f*, YIII, earth. If, at the end of the conversation, the called party replaces his receiver first, relay Y relapses as it cannot be maintained energized over its winding I due to contact 46*p*2 being open. The calling subscriber therefore receives the busy signal over: 47*y*, 39*f*, 24*w*, Ko2 and 8*p*1. When the calling subscriber replaces his receiver, relay A is deenergized and contact 10*a* opens the circuit for relay V so that it is caused to release after a short period. It then opens its contact 11*v* which opens the locking circuit for the test relays, thus causing them to relapse. Contact 45*p*2 breaks the locking circuit for relay F so that this relay also restores.

Contact 16*v* initiates the restoration of LW to normal. The rotary magnet of LW receives impulses over: battery, DLW, *d*-wiper, WII, 16*v*, interrupter U4, earth, and advances the switch wipers of LW to normal. If the wipers 1—3 (Fig. 2) brushed the contact bank, the switch will have to be advanced over contact 05 in the following circuit due to the fact that no circuit can be closed over segment S: battery, DLW, *d*-wiper, set to contact 05, 15*v*, *c*-wiper set to contact 05, 26*g*II, WII, 16*v*, U4, earth. It is for this reason that the connecting number 05 cannot be utilized. If it should be required to use this contact and to connect a subscriber's line to it, the contact wiper *d* will have to be so designed that the wipers 1—3 on the corresponding side also brush the segment S when the wipers 4—6 on the corresponding side are set to contact 05. The side on which the wipers 4—6 are fitted, however, must be adapted to have left the segment when the switch has been restored to its zero position—that is to say, when the wipers 1—3 on the corresponding side of the *d*-wiper have been set to contact 00 with the result that no further impulses can be transmitted to the rotary magnet in this position. In such a construction the contacts 15*v* and 26*g*II obviously can be dispensed with.

Relay W is maintained energized by means of its low resistance winding WII while the final selector LW is restored to normal in order to keep its contact 25*w* thrown over until the switch has been completely restored and so prevent a premature fresh seizure of the connecting unit AS—LW. Relay W does not release until after the last impulse for DLW, thus preparing the switch for further operation.

If the called subscriber happens to be engaged at the time of testing, earth and not battery is applied over the low resistance winding of relay P1 or P2 of another connecting unit to the corresponding *c*-contact over LII according to whether the subscriber's line is calling or being called. The test relay P2 cannot be energized in parallel with the low resistance winding of the other P-relay and the calling party in such a case receives the busy signal over: 44*p*2, 39*f*, 24*w*, Ko2, 8*p*1 . . . .

When he now replaces his receiver, the release takes place exactly in the same manner as that previously described.

If the calling subscriber replaces his receiver during or after the selection but before the LW has been set to the called line, the stepping switches EW and ZW have not yet reached their normal position. They are then restored in the following manner: Contact 11*v* opens the locking circuit for relays S*t* and G so that they release immediately. Contacts 13*v* and 14*v* connect EW and ZW to an interrupter U3 over the restoring contacts *ne*2 and *nz*2 so that they are restored to normal whereas the LW is advanced into normal due to impulses from the interrupter U4 as in the above case. The restoring cam contacts NE2 and NZ2 are not absolutely essential for the restoring operation. A contact 48*g*I (shown in dotted lines) may also be provided to maintain relay V energized over the resistance W*i* until the LW has been set to the selected subscriber's line. At the end of the rotary movement relay G and consequently also 48*g*I releases immediately with the result that relay V can now relapse and initiate the further release operations in the previously described manner. A testing of the subscriber's line need not be feared since a testing can only take place after the release of the slow acting relay F while the retardation of relay V, due to reducing the locking circuit by means of the resistance W*i* can be decreased to such an extent that relay V releases before relay F and opens the test circuit at 15*v* before it can be completed. In such a case EW would be connected direct to contact 34*g*II and ZW direct to contact 31*g*I while NE2, NZ2, 13*v* and 14*v* could be dispensed with.

Fig. 3 shows a further embodiment of the invention as applied to a group selector. To this switch has been allocated the stepping switch ZW including the cams NZ1—3 each one of which throws over a contact as soon as it is caused to leave its normal position. The number of steps required by the stepping switch ZW for a complete revolution depends upon the number of groups connected. If, for example, 5 different groups of lines are connected to the group selector, 5 steps will be required for a revolution. The numbering of the connected contacts is shown in Fig. 2. Assuming that 5 line groups have been provided, a line of the 5th group is connected to the 1st contact of the group selector, one of the 4th group to contact 2, one of the 3rd to contact 3, one of the 2nd to contact 4, one of the first to contact 5, the second line of the first group to contact 6 and so forth. The group selector in question operates as follows:

After setting of the existing selecting units, for example, the call finder shown in Fig. 1 and the therewith associated seizure of the first group selector, the feeding bridge relay A is energized over the subscriber's line loop. Contact 1*a* causes

relay V to operate over: battery, V, 1*a*, earth. Contacts 2*a* and 3*a* which transmit the impulses to the succeeding switch are then opened. When the subscriber now commences dialling, the control relay H is energized in the following circuit on the first release of relay A: battery, H, 5*v*, 1*a*, earth. On the re-energization of relay A after the first impulse the magnet ZW receives an impulse over: battery, ZW, 12*w*, 8*h*, 1*a*, earth. Relays H and V which operate as slow acting relays do not release during the impulse transmission. If the subscriber, for example, dials group 4, the magnet ZW receives four impulses and advances the cam NZ1—3 four steps forward. To complete a revolution this cam therefore has only one more step to go. At the end of the first impulse series relay H relapses and closes a circuit for relay W which also operates as a slow acting relay: battery, WI, contact *nz*2, 11*h*, earth. Contact 12*w* switches the magnet ZW over from the impulse circuit to the control circuit. Contact 13*w* completes the impulse circuit. Contact 14*w* closes a locking circuit for relay W as follows: battery, WI, 14*w*, 4*v*, earth. The setting of the group selector is then commenced. The rotary magnets DGW and ZW receive impulses over:

(1) Battery, DGW, 13*w*, 18*p*, interrupter U, earth.

(2) Battery, ZW, 12*w*, 7*v*, 13*w*, 18*p*, interrupter U, earth.

Contact *dgw* which is closed on the energization of the magnet DGW is provided to prevent impulse mutilation in a manner similar to that shown in Fig. 1. The stepping switch ZW has completed a revolution after a further rotary step and the group selector now is set to the first line of the selected contact group. The cam contact NZ1 in this position has closed contact *nz*1 with the result that the test relay can operate and ascertain whether the line is idle or busy over: battery, not shown switching devices in the succeeding switch, *c*-wiper of the group selector, both the windings of relay P, *nz*1, 14*w*, 4*v*, earth. By short circuiting one of its windings with the aid of contact 17*p* relay P sets up the guarding in the ordinary manner. Contact 18*p* opens the stepping circuits for ZW and DGW. If, on the other hand, the line is busy, relay P cannot operate and the rotary magnet DGW and ZW receive additional impulses. Contact *nz*1 is opened on the next impulse, thus preventing relay P from testing all the succeeding lines. Only after a further revolution has been completed—that is to say, after ZW has taken a further 5 steps—contact *nz*1 is reclosed, which occurs in the instance the test relay is connected to the second line of the selected group. The energization of relay P at the same time closes contacts 15*p* and 16*p* which switch through the speaking lines to the succeeding switch. Impulse transmission to the succeeding switch during the next impulse series is effected by means of contacts 2*a* and 3*a*:

(1) Earth, 9*h*, 2*a*, 15*p*, *a*-wiper of GW, impulse receiving relay of the succeeding switch, battery.

(2) Battery, resistance, 10*h*, 3*a*, 16*p*, *b*-wiper of GW, impulse receiving relay of the succeeding switch, earth.

Contacts 9*h* and 10*h* disconnect earth and battery from the speaking lines at the end of the impulse transmission. Due to contact 12*w* being thrown over, the further impulse series do not influence the stepping switch further. When the subscriber replaces his receiver, relay A releases. Contact 1*a* then breaks the locking circuit for relay V which in turn causes the release of the switch. Contact 4*v* opens the locking circuit for relays W and P. Relay P relapses and by means of contact 18*p* closes the following circuit for the rotary magnet DGW: battery, DGW, 13*w*, 18*p*, interrupter U, earth. Contact 7*v* prevents the stepping switch from receiving impulses in parallel with the rotary magnet DGW which would cause it to move out of its normal position. Relay W is maintained energized over winding WII and segment S until the switch has been restored to normal over: Battery, DGW, *d*-wiper, segment S, WII, 6*v*, earth. The circuit for relay W is opened on the last contact but since it operates with slow action it still maintains its contact 13*w* closed while an additional impulse is received with the result that the switch reaches its normal position.

If the subscriber replaces his receiver after the first numerical selection prior to the group selector having been set to a final selector, the stepping switch ZW also has to be restored to normal as it has not yet reached this position. This is accomplished by means of the cam NZ3 over: battery, ZW, 12*w*, 7*v*, *nz*3, interrupter U, earth.

When the group selector fails to find an idle line leading to the succeeding switch, it has to be brought to rest on the last contact of the group so that it will not advance and carry out another testing of the subscribers' lines. The energization of the test relay P over winding P3 and the last contact to which the *d*-wiper of the group selector has been set therefore brings the switch to rest: battery, DGW, *d*-wiper on last contact, WIII, PIII, 14*w*, 4*v*, earth. Relay P at contact 18*p* opens the circuit for the rotary magnet, thus preventing it from carrying out further operations. The subscriber receives the busy signal over the last contact to which the *a*- and *b*-wipers have been set. When the subscriber now replaces his receiver, relay V, as previously described, is released, whereupon it opens the locking circuit for relay P at contact 4*v*. Contact 18*p* closes the stepping circuit for DGW whereas relay W remains energized a short period longer and maintains contact 13*w* closed. On the next step of the group selector, that is to say on the step from the last contact to normal position, relay W also relapses and opens the circuit for the rotary magnet.

What is claimed is:

1. In an automatic switch, a set of wipers, a cam having a normal position and a plurality of off-normal positions, means for setting the cam in an off-normal position, means for restoring the cam to normal position, and means for setting the switch wipers to a position determined by the off-normal position of said cam simultaneously with the restoration of the cam to normal position.

2. In an automatic switch, a set of wipers, a cam having a normal position and a plurality of off-normal positions, means for setting the cam to an off-normal position, means for operating the cam step by step through the remaining off-normal positions to its normal position, and means for operating the switch wipers one step for each step taken by the cam in returning to normal position.

3. In an automatic switch having access to a plurality of groups of lines, a set of wipers, two cams each having a normal position and a plurality of off-normal positions, means for setting the cams to certain off-normal positions, means for restoring the cams to normal position, means for setting the switch wipers into selective rela-

tion to a group of lines responsive to the restoration of the first cam to normal position, and means for setting the switch wipers on a particular line of said group responsive to the restoration of the second cam to normal position.

4. In a telephone system, a switch, groups of lines connected to successive contacts accessible to the switch, an auxiliary switch associated with said first switch and adapted to receive controlling impulses from a calling party, and means controlled by said auxiliary switch for setting the first switch to the first contact of a wanted group and for determining the number of impulses required for setting the first switch to the succeeding contact of the same group.

5. In a telephone system, a switch, groups of contacts accessible to the switch, an auxiliary switch having a normal position and a plurality of off-normal positions corresponding to the respective contact groups, means for operating the auxiliary switch to one off-normal position, means for further operating the switch through the remaining off-normal positions to home position and for simultaneously operating the switch to the first contact of the group corresponding to said one off-normal position, and means for further operating the auxiliary switch through all positions to set the first switch on succeeding contacts of the same group.

6. In a telephone system, a switch, groups of lines connected to successive contacts accessible to the switch, two auxiliary switches associated with said first switch and adapted to receive separate series of controlling impulses from a calling party, means controlled by the first auxiliary switch for setting said first switch to the first contact of the group indicated by the first series of impulses, and means controlled by said two auxiliary switches jointly for setting the first switch to the contact of said group indicated by the second series of impulses.

7. A telephone system as claimed in claim 6 in which the second auxiliary switch determines the number of steps required by the first switch to advance from the first contact of the group to the wanted contact and in which the first automatic switch counts off these steps while operating in synchronism with the first switch.

8. A telephone system as claimed in claim 6 in which the number of steps taken by the first switch in stepping from the first contact to the wanted contact of a group is determined by the number of lines accessible to the switch.

9. In a telephone system, an automatic switch equipped with a wiper, a row of contacts accessible to said wiper, means for directively operating the switch to set the wiper on a particular one of said contacts, means for automatically operating the switch to step the wiper over the contacts subsequent to said one contact, and means for causing the switch to test only said one contact and every fifth contact thereafter.

10. In a telephone system, an automatic switch equipped with a wiper, a plurality of groups of contacts arranged in a single row and accessible to said wiper, means for directively operating the switch to set the wiper on a particular contact of one of said groups, means for automatically operating the switch to step the wiper over contacts of subsequent groups, and means for causing the switch to test said particular contact and the contacts in the same relative position in each of the subsequent groups.

11. A telephone system as claimed in claim 10 in which the automatic operation of the switch is stopped as soon as a contact on being tested is found to be idle.

12. A telephone system as claimed in claim 10 in which the automatic operation of the switch continues until the wiper encounters either an idle contact or the last contact of the row.

13. In a telephone system, an automatic switch and an associated auxiliary switch, groups of contacts accessible to said automatic switch, means for directively operating the auxiliary switch from normal position to a position designating a contact of a particular order in a group, and means for causing said automatic switch to test the contacts of the order designated in the respective groups.

14. In a telephone system, an automatic switch and an associated auxiliary switch, groups of contacts accessible to said automatic switch, means for directively operating the auxiliary switch from normal position to a position designating a contact of a particular order in a group, means for operating both in synchronism to cause said automatic switch to move over said contact groups and to cause said auxiliary switch to periodically pass through its normal position, and means controlled by said auxiliary switch in passing through normal position for causing the automatic switch to test the contacts of the order designated in the respective groups.

15. The method of causing a switch to test a contact of a particular order in each of a plurality of groups of contacts which consists in initially setting an auxiliary switch to designate the order of the contacts to be tested and in subsequently operating both switches in synchronism.

16. The method of setting an automatic switch responsive to two series of digit impulses which consists in initially moving the wipers of the switch a number of steps equal to the complement of the number of impulses in the first series and in subsequently moving the wipers of the switch a number of steps equal to a constant multiplied by the complement of the number of impulses in the second series.

17. The method of setting the wipers of a switch on a particular one of a plurality of contacts arranged in equal groups responsive to two series of impulses which consists in initially moving the wipers a number of steps equal to the complement of the number of impulses in the first series, and in subsequently moving the wipers a number of steps equal to the number of contacts in a group multiplied by the complement of the number of impulses in the second series.

18. The method of setting the wipers of a connector responsive to two series of impulses which consists in initially setting two associated auxiliary switches in accordance with the respective impulse series, in simultaneously operating the connector and the first auxiliary switch a number of steps equal to the complement of the number of impulses in the first series, in operating the second auxiliary switch a number of steps equal to the complement of the number of impulses in the second series, and in simultaneously operating the connector and the first auxiliary switch ten steps for each step taken by the second auxiliary switch.

FRITZ LUBBERGER.