Dec. 29, 1942. C. N. CAHUSAC ET AL 2,306,588

SMOKE DETECTING APPARATUS

Filed Jan. 23, 1940 3 Sheets-Sheet 1

Fig. 1.

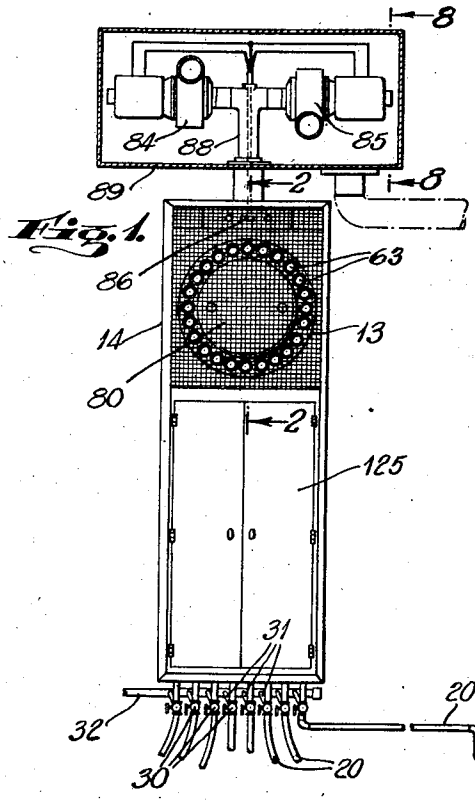


Fig. 8.

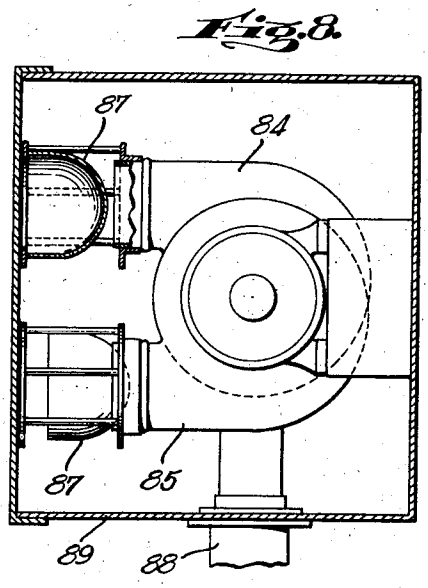


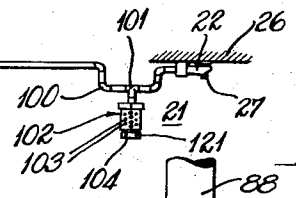


Fig. 2.

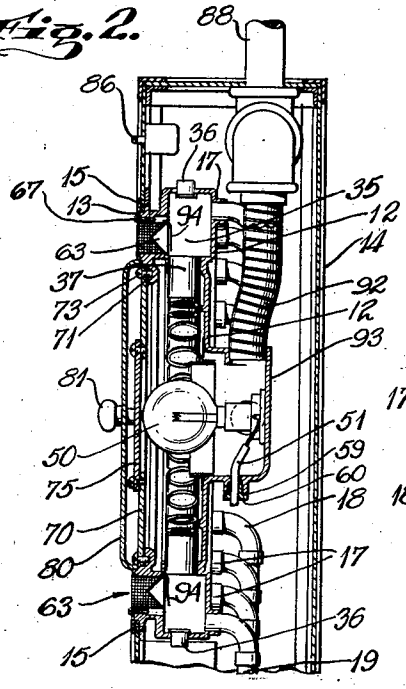


Fig. 3.

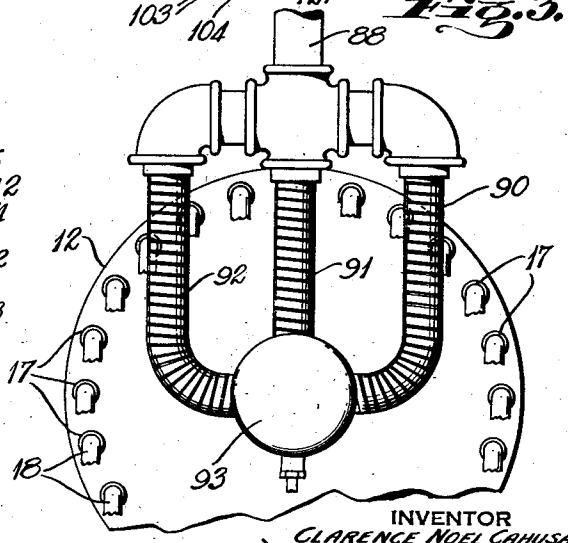


INVENTOR
CLARENCE NOEL CAHUSAC
FRANK B. ALLEN
BY
Frederick P. Dumeau
ATTORNEY

Dec. 29, 1942. C. N. CAHUSAC ET AL 2,306,588

SMOKE DETECTING APPARATUS

Filed Jan. 23, 1940 3 Sheets-Sheet 2

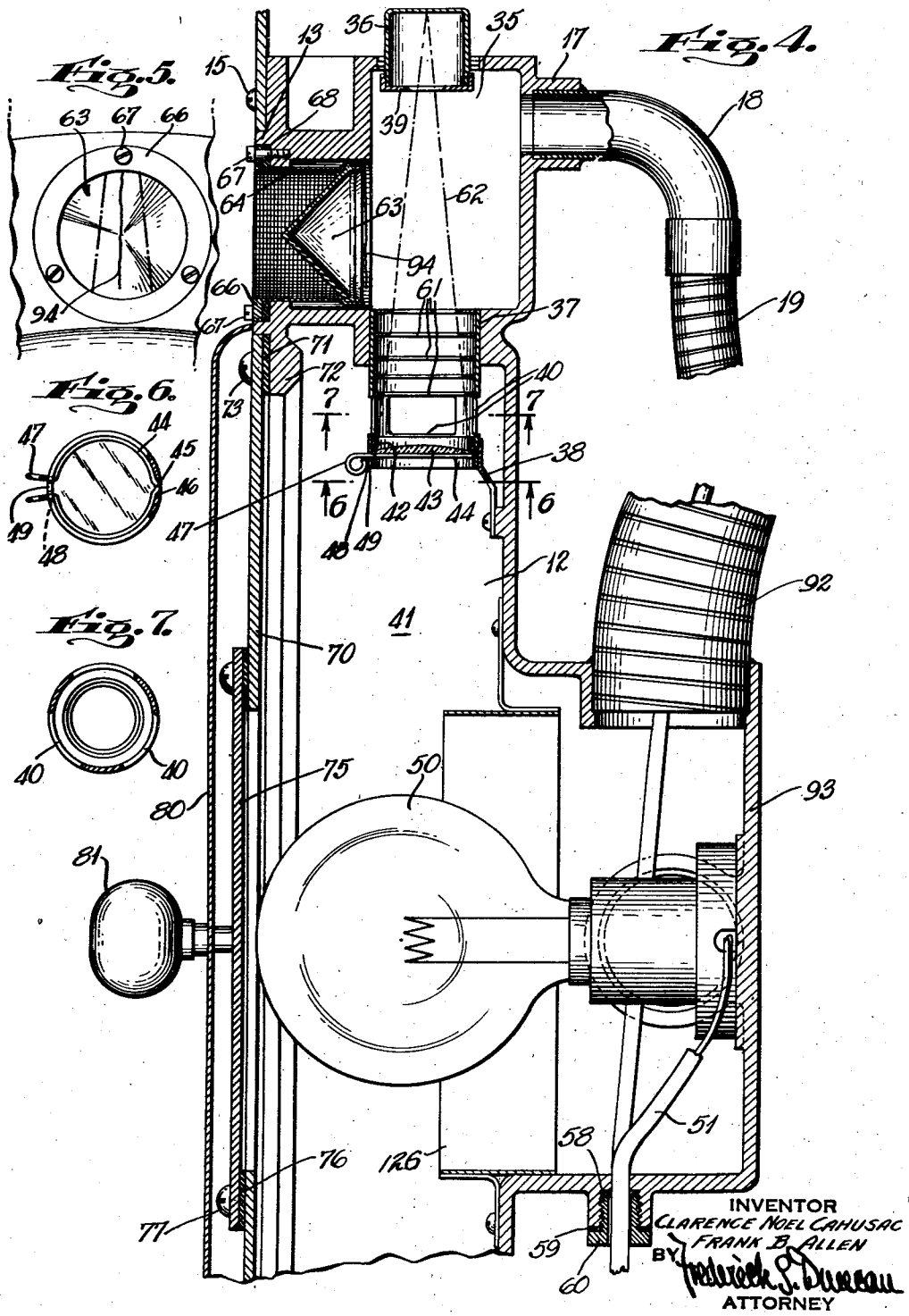


INVENTOR
CLARENCE NOEL CAHUSAC
FRANK B. ALLEN
BY
ATTORNEY

Dec. 29, 1942. C. N. CAHUSAC ET AL 2,306,588

SMOKE DETECTING APPARATUS

Filed Jan. 23, 1940 3 Sheets-Sheet 3

Fig. 9.

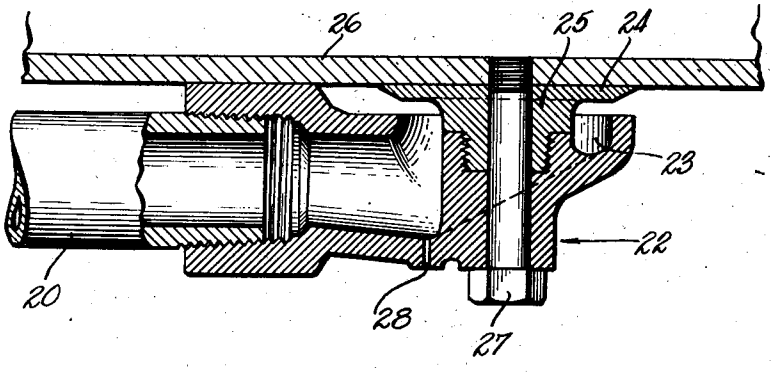


Fig. 10.

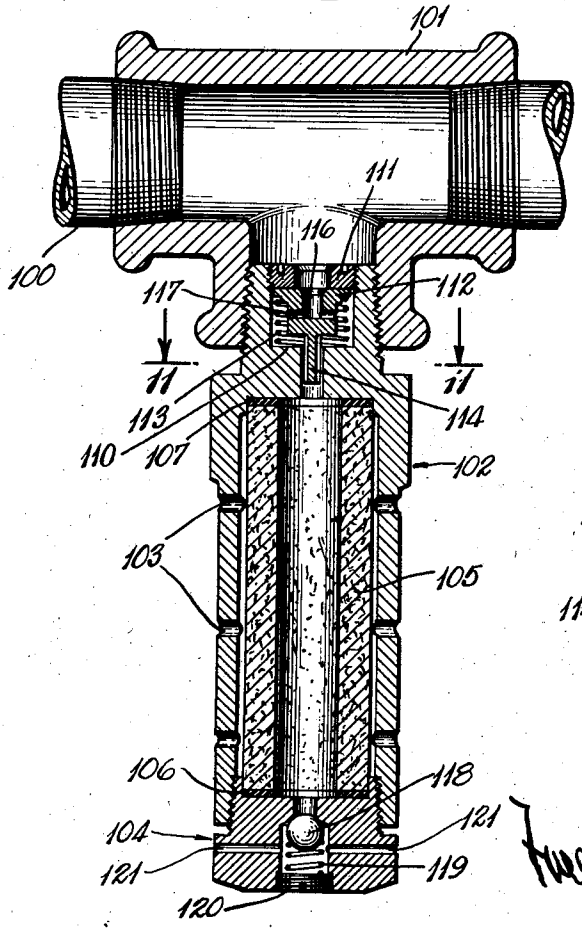


Fig. 11.

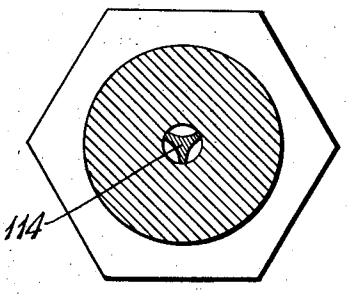


INVENTOR
CLARENCE NOEL CAHUSAC
BY FRANK B. ALLEN
Frederick B. Duncan
ATTORNEY

Patented Dec. 29, 1942 2,306,588

# UNITED STATES PATENT OFFICE

2,306,588

## SMOKE DETECTING APPARATUS

Clarence Noel Cahusac, Newark, and Frank B. Allen, Verona, N. J., assignors to C-O-Two Fire Equipment Company, Newark, N. J., a corporation of Delaware

Application January 23, 1940, Serial No. 315,194

8 Claims. (Cl. 88—14)

This invention relates to improvements in smoke detecting apparatus.

Apparatus for detecting fire in different rooms or compartments comprising means for drawing smoke from said rooms or compartments to a central smoke detecting station are old and well known as well as means for delivering steam or other fire extinguishing fluid to said compartments from said central detecting station.

Among the objects of this invention is the provision of an improved smoke detecting apparatus comprising a large number of detector chambers preferably arranged in a circular series surrounding and communicating with a central space or exhaust chamber, a single source of light in the exhaust chamber illuminating all of the detector chambers, improved means for preventing stray rays of light projected through the detector chambers from entering the observation windows, and improved means for detecting circulation of air within the detector chambers.

Other objects of the invention will appear from the following description taken in connection with the drawings, in which—

Fig. 1 is a front elevational view of a detector cabinet showing the suction cabinet in vertical section;

Fig. 2 is a vertical section through the upper portion of the detector cabinet on the line 2—2 of Fig. 1, showing the upper portion of the detector chamber assembly casting in vertical section;

Fig. 3 is a rear elevational view of a portion of the detector casing;

Fig. 4 is a vertical section through the detector casting and one of the detector chambers;

Fig. 5 is a front elevational view of an observation window closing a detector chamber;

Fig. 6 is an end view of the lens and its housing on the line 6—6 of Fig. 4 showing a part of the housing in section;

Fig. 7 is a horizontal section of the lens housing on the line 7—7 of Fig. 4;

Fig. 8 is a vertical section on the line 8—8 of Fig. 1;

Fig. 9 is a vertical section through the smoke accumulator and fire extinguishing fluid dispensing nozzle;

Fig. 10 is a vertical section through our improved means for trapping products of condensation collecting in low points of the suction tubes; and

Fig. 11 is a horizontal section on the line 11—11 of Fig. 10.

The apparatus illustrated for the purposes of disclosing the invention includes a hollow detector housing 12 constructed as a casting and of circular form. This housing may be provided with an annular flange 13 projecting through an opening in a cabinet 14 and may be secured to the cabinet by screw bolts 15 as indicated. The housing 12 is provided with a series of hollow cylindrical projections 17 communicating with the hollow interior of the housing and arranged in circular form as indicated in Figs. 2 and 3. Mounted within these projections 17 and secured thereto by sealing welds are elbows 18 to which are secured flexible tubes 19 which extend down through the base of the cabinet and are connected to tubes 20 which extend to the various compartments or rooms, one of which is indicated at 21. The end of each tube 20 is provided with a smoke accumulator and fluid nozzle 22. The mouth of the accumulator is provided with a continuous circular upwardly facing groove 23 located opposite a circular deflecting flange 24 spaced from the outer side wall of the groove and provided with a hub 25 threadedly connected to the main body of the accumulator 22, the accumulator being secured to the ceiling 26 of the compartment by means of a threaded bolt 27. The accumulator may be provided with a small drain hole 28 to carry off condensation accumulated in the pipes.

Located between and connecting the tubes 19 and 20 are three way valves 30 by means of which communication may be established or interrupted between the tubes 19 and 20 and simultaneously communication interrupted or established between tubes 20 and tubes 31 connected to a header 32, as when it is desired to deliver fire extinguishing fluid from the header 32 to the compartment or room in which smoke has been detected.

The detector housing or casting 12 is provided with a series of radially extending detector chambers 35 which communicate with said extensions 17. The outer end of each chamber is preferably sealed by means of a cup 36 of the configuration shown, provided with a diaphragm 39 at its open end to trap light reflected from the closed end of the cup. The free edge of the diaphragm is preferably thin and formed as shown to prevent reflection of light therefrom. The inner surfaces of the cup and diaphragm are preferably painted a dull black to absorb and thereby prevent reflection of light out of the mouth of the cup.

Lens holders 37 may be frictionally held in position in the inner ends of the detector chambers by springs 38 secured to the rear wall of the

detector casting as indicated. The inner portions of the lens holders are provided with circumferentially spaced openings 40 in communication with the relatively large air chamber 41 in the detector casting. Secured to the inner end of the lens holder is a lens seat 42 against which is seated a converging lens 43 held in position by a split spring ring 44 which is provided with an outwardly bent portion 45 adapted to project into a recess 46 in the lens holder, and with manipulative portions 47 projecting outside of the lens holder through a circumferential slot 48 which has an opening 49 extending to the end of the lens holder, permitting the split ring 44 to be withdrawn from the holder and the lens removed.

A common source of light such as the light bulb 50 may be employed to transmit light into all of the detector chambers 35, and for this purpose it is mounted on the rear wall of the housing and has its filament located at the intersection of the axis of the housing and the axes of all of the lenses. Current for the light may be supplied over the circuit wires 51 which pass out of the housing through an air tight seal comprising washers 58 and 59 and a hollow threaded plug 60.

For the purpose of preventing any stray light emanating from the conical light beam 62 Fig. 4 from striking any part of the inner surfaces of the lens holder and detector chamber, the lens holder is preferably provided with a series of annular diaphragms 61 of the size and arrangement shown. The beam of light may be observed through a conically shaped observation window 63 suitably supported in a cylindrical holder 64 the inner surface of which is preferably painted non-glossy black for absorbing exterior light reflected from the surface of the window for preventing glare. This window is preferably located an appreciable distance from the supporting flange 66 on the holder, which is secured by screw threaded bolts 67 against the front of the detector casting, a suitable gasket 68 providing an air tight connection between the holder and the opening in the casting.

The front of the casting is closed by a composite cover comprising as one of its elements an annulus 70 seated on a gasket 71 on an inwardly extending annular flange 72 on the casting to which the annulus 70 is secured by means of screw threaded bolts 73. If desired for the purpose of making the annulus 70 more readily detachable, the screw threaded bolts may pass through bayonet slots, not shown, in the annulus 70. The other element of the cover consists of a disk 75 which may be sealed on the annulus 70 by means of a gasket 76 and secured against the front face of the annulus 70 by means of screw threaded bolts 77 which for the purpose of making the disk 75 more readily detachable may pass through bayonet slots, not shown, in the disk 75. By making the disk 75 separate from the annulus 70 access may be had to the source of light 50 by merely removing the disk 75. Both the disk and the annulus may be enclosed by a cover plate 80 provided with shouldered knobs 81 rotatably mounted in the cover plate and threaded into the annulus 70.

Fig. 1 shows a pair of motors and suction pumps 84 and 85 which may be controlled from a switch 86 and any well known circuit means so that either of these motors may be operated. As disclosed in Fig. 8 when one of these motors is operated, the delivery side of the other motor will be closed by a suction operated valve 87 of known construction. The intake ends for the suction fans driven by the motors are connected to a common tube 88 which passes through the bottom wall of the suction cabinet 89 which may be of any suitable construction and may be supported on the detector cabinet or in any suitable manner. The tube 88 as shown in Fig. 3 is connected by three tubes 90, 91 and 92 to radial ports in an axially projecting part 93 of the rear wall of the detector casting on which as indicated the source of light 50 is supported.

For the purpose of detecting whether or not the suction mechanism is operating and each of the suction tubes is clear, a short length of thread 94 or the like is attached to the highest point of the inner end of the window holder so that it hangs vertically diametrically of the window to one side of the light beam 62 and is visible by exterior light reflected therefrom, so that its stationary condition or its movement caused by a circulating stream of air may be observed.

The improved means for trapping the products of condensation in the tubes 20 and which is located at the lowest point 100 of each tube 20 and connected thereto by a T head coupling 101, consists of a cylindrical casing 102 threadedly connected to the T head 101. The cylindrical wall of the casing 102 is perforated at 103 and its lower end is closed by a threaded perforated plug 104 by means of which a porous ceramic cylinder 105 is held in position in the casing 102, gaskets 106 and 107 being provided to seal the ceramic cylinder 105 between the plug and a shoulder in the casing.

The upper end of the casing 102 is provided with an upwardly facing valve seat 110 and a removable ring shaped downwardly facing valve seat 111 against which a valve 112 is held seated by a spring 113 when the fluid pressure in the pipe 20 is low or is negative. The valve 112 is provided with a grooved stem 114 which guides the valve in its movements and permits products of condensation to pass into the ceramic cylinder 105. The body of the valve is provided with an axial bore 116 which communicates with radially extending ports 117 so that products of condensation may pass the valve when the valve is in the position indicated in Fig. 10. The valve is normally held in the position indicated in Fig. 10 permitting the products of condensation to pass the valve into the ceramic cylinder 105 which permits condensed fluid such as water to pass out through its walls and thence through the holes 103 in the casing 102. The high pressure fire extinguishing fluid admitted into the tube 20 depresses the valve and seats it on the lower seat 110 in the casing 102 preventing the high pressure fluid from entering the ceramic cylinder and escaping therethrough to the atmosphere or breaking said cylinder. In order to prevent pressure from building up within the ceramic cylinder of an amount sufficient to break the same, the closure 104 is provided with a ball valve 118 held in position by a light spring 119 seated on a plug 120. The chamber of this valve communicates with the atmosphere by means of radial ports 121.

The cabinet may be provided with doors 125 providing access to a space within the cabinet which may be used for storing repair parts for the apparatus.

In operating the device one or the other of the motors is set in operation and air is drawn through each of the accumulators in each of the rooms or compartments and directed by tubing through the associated detector chambers 35 and if desired the cabinet may be provided with num-

bers or the like indicating the rooms with which the detector chambers are associated. For the purpose of increasing the vision, the front part of the cabinet above the doors and the cover plate **80** and the exposed flange **13** of the detector casting may be painted a dull black and the inside of the detector chambers may be painted a dull black to increase the visibility. When clear air is drawn from the rooms, the beams of light in the detector chambers will not be visible. When, however, smoke is drawn through the detector chambers the beam or beams in the detector chambers corresponding to the rooms from which smoke is drawn will become visible. If desired, the three way valve **30** may then be operated and fire extinguishing fluid delivered to the room from which smoke is drawn.

A light deflecting band **126** may be suitably supported on the rear wall casting to prevent light rays from striking the rear wall of the casting.

The air circulation detectors **94** may be viewed at any time to determine whether or not the suction pumps are working and the various tubes leading from the various rooms or compartments are open. Any movement of air due to the operation of the suction pump will cause the detectors to move.

The construction disclosed has many advantages. It provides a central device or station for detection of fires or the like in a large number of rooms or compartments. If desired or necessary a plurality of concentric rows of detector chambers and observation windows may be provided. The air streams drawn from the several compartments are kept separate until after they have passed the observation windows so that the smoke or other particles of matter in the air drawn from one compartment can be observed only in the detector chamber associated with such compartment and can in no way enter any other detector chamber or interfere with observations made of the condition of air in other compartments. As provision has been made to prevent any of the light from being reflected through the observation windows, except that reflected from the particles of matter in the beams, there is no such illumination of the exterior produced by the apparatus as would interfere with observations or would be objectionable in other respects. The use of compartment identification numbers or the like on the exterior of the apparatus greatly facilitates the use of the apparatus.

While the invention has been described with reference to a preferred form of apparatus, it is to be understood that this has been done for purposes of disclosure and is not to be considered limitative, and that the right to all such changes as fall within the principles of the invention and the scope of the appended claims is reserved.

What is claimed is:

1. In an apparatus for detecting suspended matter in fluids, the combination of a circular series of detector chambers having their axes lying in the same plane and intersecting at a common point, means for causing a flow of fluid with suspended matter to flow axially of said chambers and into the region of said point, and a source of light located at said point for projecting beams of light through said chambers.

2. In an apparatus for detecting suspended matter in fluids, the combination of a series of detector chambers having their axes intersecting at a common point, means for causing a flow of fluid with suspended matter to flow axially of said chambers and into the region of said point, and a source of light located at said point for projecting beams of light through said chambers.

3. In an apparatus for detecting suspended matter in fluids, the combination of a circular series of detector chambers having their axes lying in the same plane and intersecting at a common point, means for causing a flow of fluid with suspended matter to flow axially of said chambers and into the region of said point, a source of light located at said point for projecting beams of light through said chambers, and a circular series of observation windows located adjacent the inner ends of said chambers for observing the illuminated suspended matter in the flowing fluid in said chambers.

4. In an apparatus for detecting suspended matter in fluids, the combination of a series of detector chambers having their axes intersecting at a common point, inlets at the outer ends of said chambers for drawing air from various compartments, said apparatus including an inner common chamber with which the inner ends of said detector chambers communicate, and suction means connected to said inner chamber for drawing fluid through all of said detector chambers.

5. In an apparatus for detecting suspended matter in fluids, the combination of a detector casing provided with a series of detector chambers having their axes intersecting at a common point, the outer ends of said chambers being provided with inlet ports adapted to connect with various rooms in which smoke is to be detected and said casing being provided with a common central chamber in communication with all of said detector chambers, one wall of said common chamber having its central portion offset outwardly, a light bulb mounted on said offset portion of said wall of said common chamber having its filament located at said point, and suction means connected to said offset portion of said wall to draw air through said detector chambers.

6. In an apparatus for detecting suspended matter in fluids, the combination of a detector casing provided with a series of detector chambers having their axes intersecting at a common point, the outer ends of said chambers being provided with inlet ports adapted to connect with various rooms in which smoke is to be detected and said casing being provided with a common central chamber in communication with all of said detector chambers, one wall of said common chamber having its central portion offset outwardly, a light bulb mounted on said offset portion of said wall of said common chamber having its filament located at said point, and suction means connected to said offset portion of said wall, said offset portion being of cylindrical form and said suction means being connected to the cylindrical wall of said cylindrical offset portion at diametrically opposite points.

7. In an apparatus for detecting suspended matter in fluids, the combination of a detector tube, means for causing the fluid with the suspended matter to flow axially of said tube, means for projecting a beam of light through the tube parallel with its axis, an observation window for observing the illuminated suspended matter at right angles to said axis, and a flexible mem-

ber located between the light beam and window and adapted to be moved by said flow of fluid.

8. In an apparatus for detecting suspended matter in fluids, the combination of a common exhaust chamber, a series of radially disposed detector chambers having their axes intersecting at a common point located at the center of said common chamber with which said detector chambers are in communication, inlet ports at the outer ends of said detector chambers, a source of light located at said point, a port connecting each of said detector chambers to said common chamber, a lens holder supported in each port, the walls of the lens holders being provided with ports to establish communication between the detector chambers and said common chamber, a converging lens in each lens holder, and means in said lens holders for restricting the cross sections of said beams and said connecting ports to the same shape and areas.

CLARENCE NOEL CAHUSAC.
FRANK B. ALLEN.