(No Model.) 4 Sheets—Sheet 1.

E. H. TAYLOR.

PAPER BOX MACHINE.

No. 590,652. Patented Sept. 28, 1897.

Fig. 1.

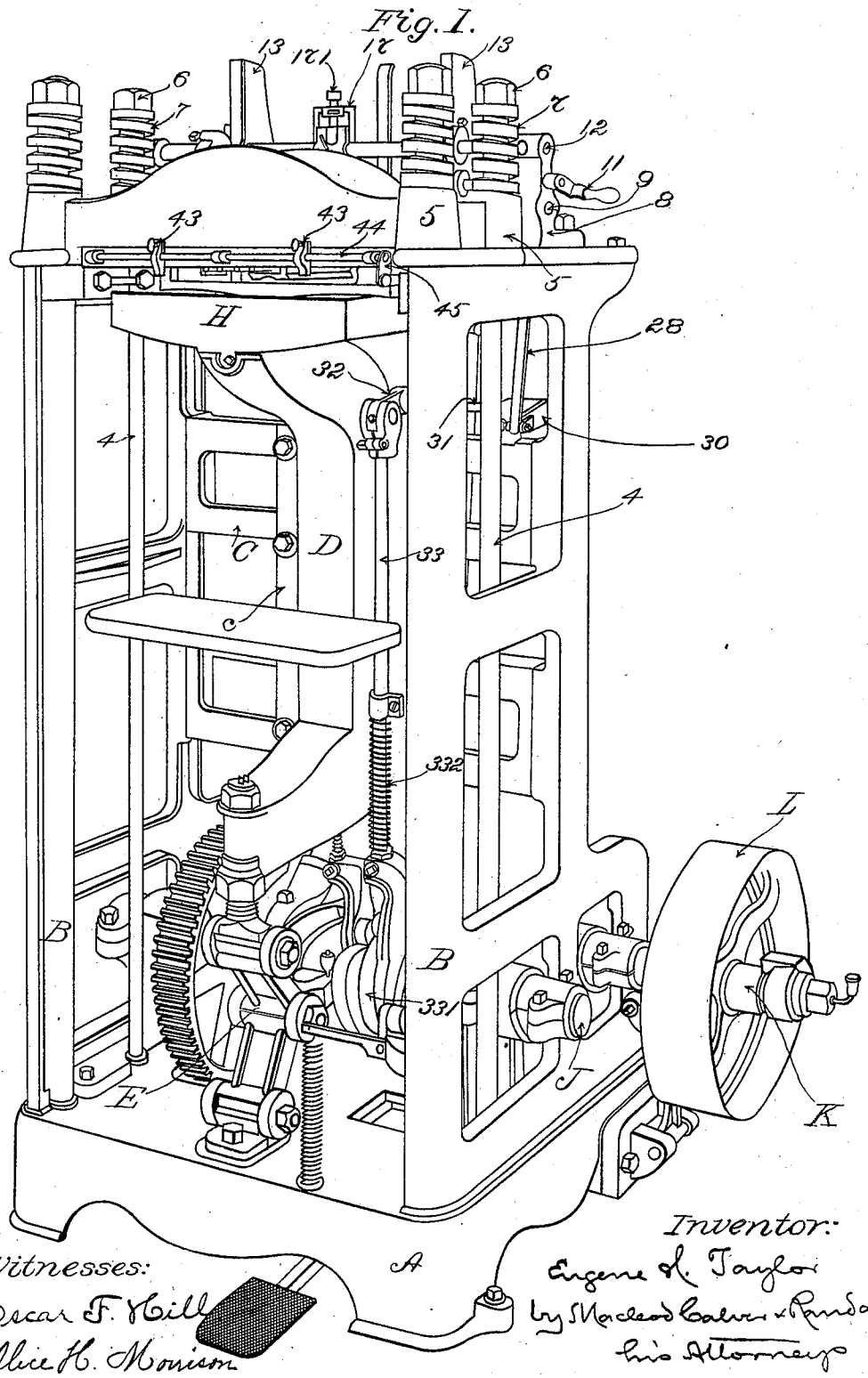

Witnesses:
Oscar F. Hill
Alice H. Morison

Inventor:
Eugene H. Taylor
by Macleod Calver & Randall
his Attorneys

THE NORRIS PETERS CO., PHOTO-LITHO., WASHINGTON, D. C.

(No Model.) 4 Sheets—Sheet 2.

E. H. TAYLOR.

PAPER BOX MACHINE.

No. 590,652. Patented Sept. 28, 1897.

Fig. 2.

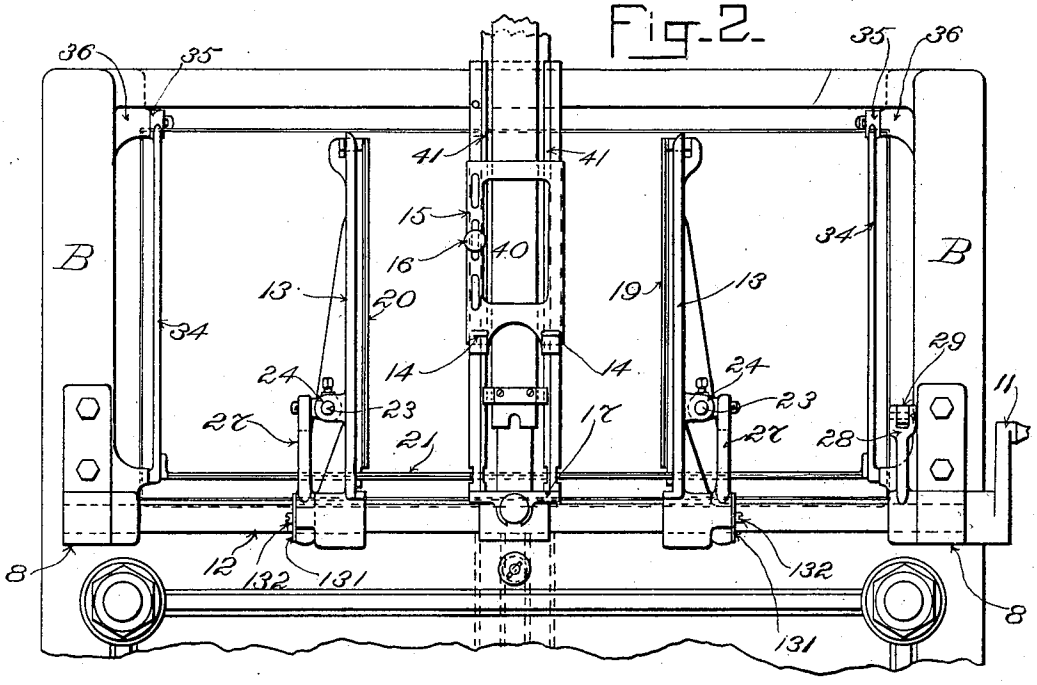

Fig. 3.

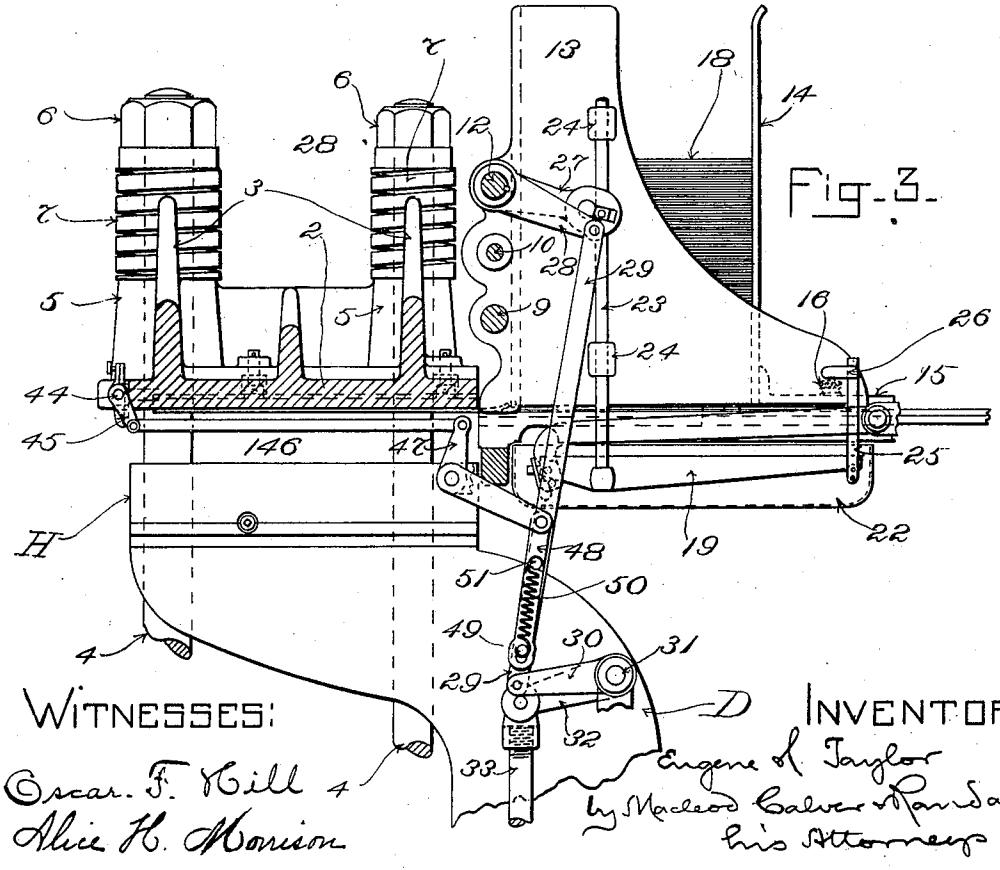

WITNESSES:

Oscar. F. Hill

Alice H. Morrison

INVENTOR:

Eugene H. Taylor

by Macleod Calver & Ramsdell

his Attorneys.

THE NORRIS PETERS CO., PHOTO-LITHO., WASHINGTON, D. C.

(No Model.) 4 Sheets—Sheet 3.

E. H. TAYLOR.

PAPER BOX MACHINE.

No. 590,652. Patented Sept. 28, 1897.

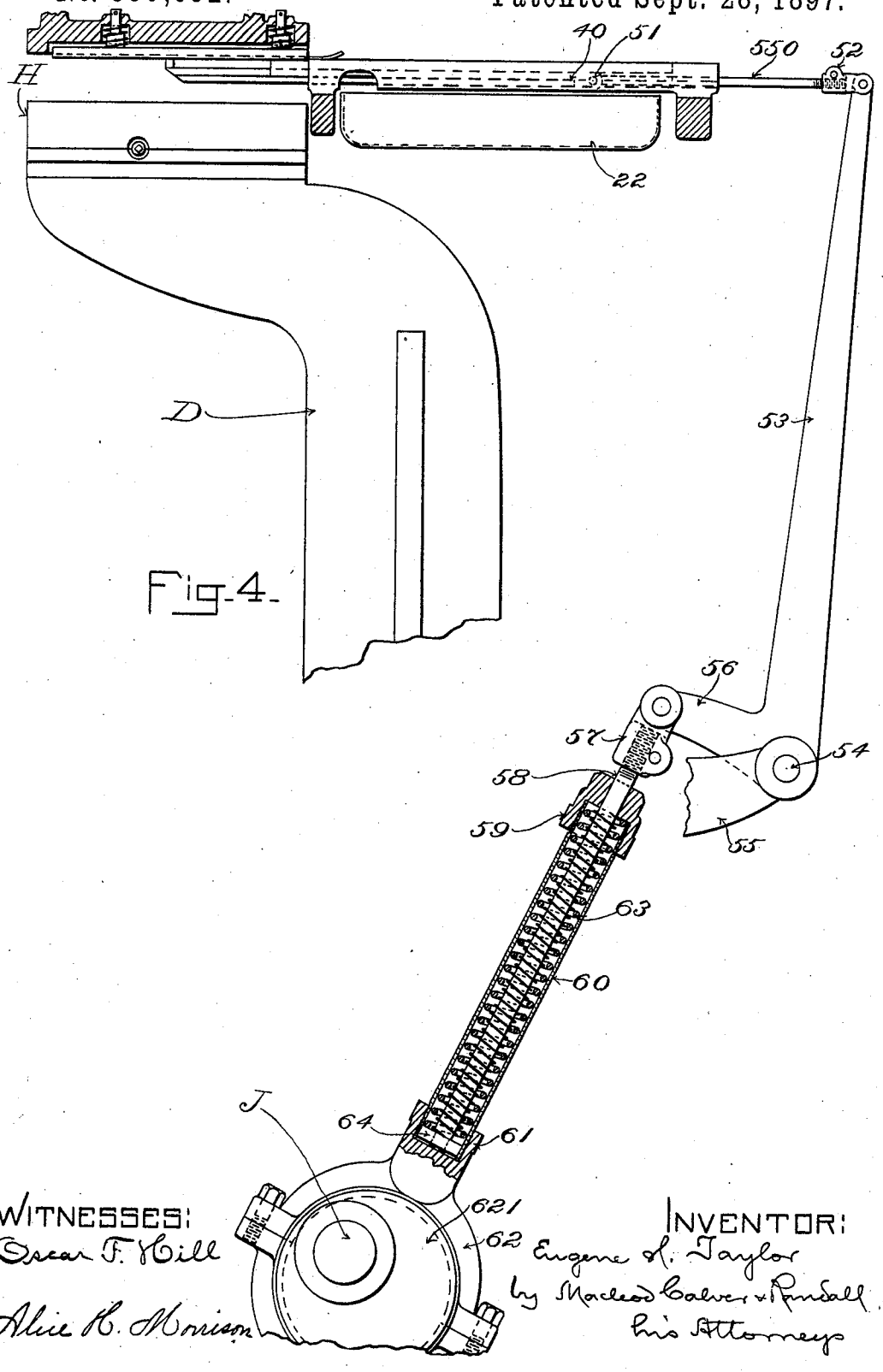

Fig. 4.

WITNESSES:
Oscar F. Hill
Alice R. Morrison

INVENTOR:
Eugene H. Taylor
by Macleod Calver & Rundall
his Attorneys

THE NORRIS PETERS CO., PHOTO-LITHO., WASHINGTON, D. C.

(No Model.) 4 Sheets—Sheet 4.

E. H. TAYLOR.

PAPER BOX MACHINE.

No. 590,652. Patented Sept. 28, 1897.

Fig. 5.

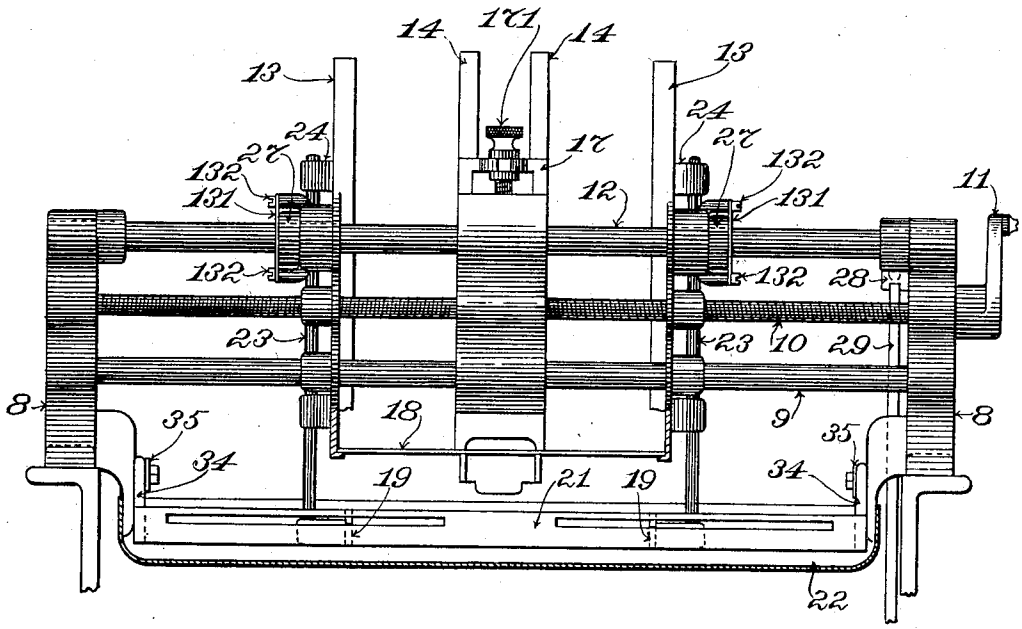

Witnesses:

Oscar F. Hill.

Edith J. Anderson.

Inventor:

Eugene H. Taylor

by Macleod Calver & Randall

Attorneys.

THE NORRIS PETERS CO. PHOTO-LITHO., WASHINGTON, D. C.

UNITED STATES PATENT OFFICE.

EUGENE H. TAYLOR, OF LYNN, MASSACHUSETTS.

PAPER-BOX MACHINE.

SPECIFICATION forming part of Letters Patent No. 590,652, dated September 28, 1897.

Application filed June 22, 1896. Serial No. 596,390. (No model.)

To all whom it may concern:

Be it known that I, EUGENE H. TAYLOR, a citizen of the United States, residing at Lynn, in the county of Essex and State of Massachusetts, have invented certain new and useful Improvements in Paper-Box Machines, of which the following is a specification, reference being had therein to the accompanying drawings.

My invention relates to machines for making boxes from paper or pasteboard, and more particularly to the machines commonly known as "box-ending" machines, which are used for securing the ends of such boxes in place.

The invention is fully set forth in the following description, and the novel features thereof are pointed out and clearly defined in the claims at the end of this specification.

In the following description reference is made to the accompanying drawings, in which—

Figure 1, Sheet 1, is a perspective of a machine embodying my invention. Fig. 2, Sheet 2, is a plan view showing the pasting mechanism. Fig. 3, Sheet 2, is a view, partly in section from front to rear and partly in elevation, of the top of the machine, showing the hopper for the end blanks and the means for operating the pasters, as also that for operating the stops which assist in positioning the blank when it is brought forward over the form upon which the box is placed. Fig. 4, Sheet 3, is a partly-sectional detail view of the feed mechanism detached. Fig. 5 is a view of the machine in vertical transverse section.

In box-ending machines as hitherto made it commonly is the case that when the machine is to be fitted for a change in the size of the end pieces the hopper used for holding the stack of end pieces requires to be adjusted in width and the pasting devices require to be adjusted independently of the hopper to suit the new width of the end pieces. This causes a considerable delay in the operation of the machine and also requires to be done by a skilled workman for the attainment of the best results, since it is necessary that the paste should be applied to the end blank in exactly the right places. In the machine hereinafter described these objections are avoided and the adjustment of the hopper and of the pasting devices is accomplished simultaneously, quickly, and accurately.

Referring to the drawings, A is the base of the machine, B B are upright side frames, and C is a cross-frame or spider which extends between and is secured to the upright side frames B. On the cross-frame C are placed vertical ways *c*, which guide the vertically-movable horn D, the latter being actuated by means of the toggle mechanism E and carrying at its upper end the platen or box-support H. The main shaft, from which the toggle mechanism is actuated, is shown at J and the driving-shaft at K, the latter having secured thereto a belt-pulley L. These parts may be of usual and well-known construction, and a detailed description thereof or of their arrangement and operation I do not deem necessary to an understanding of my present invention.

On the top of the side frames B is placed a top plate 2, which is provided with ribs 3 to increase its strength. The vertical rods 4, of which there are two on each side of the machine, are secured at their lower ends in the bed-plate A and at their upper ends pass through the said top plate and through the turrets or bosses 5 formed thereon. Above said turrets 5 and between the latter and nuts 6 on top of the said rods 4 are placed springs 7, which allow the top to yield slightly under heavy pressure. By adjustment of the nuts 6 the tension of the springs, and thus the pressure applied in pressing the end piece onto the box-body, may be varied as desired.

The box-body may be formed in any well-known manner, and in practice will be provided at the ends thereof with flanges projecting inwardly from the sides and bottom, to which flanges the end pieces are applied and pasted, all as usual. The box support or form H corresponds in size with the interior of the box, so that the box-body may be placed thereon by the operator in the operation of securing the end pieces in place. The form H is arranged in well-known manner, so that it either may be adjusted in dimensions to fit the box which is being operated upon or may be replaced by another one of the proper size. At the rear of the top plate of the machine are located the hopper, the

pasting mechanism, and the feeding mechanism. Directly behind the top plate 2 I secure on the top of the side frames B B the uprights 8 8, one of these uprights 8 being placed on each side of the machine. In the said uprights 8 I support a guide-rod 9, and directly above said guide-rod 9 a screw-shaft 10, Fig. 3, is journaled in said uprights, one end of said screw-shaft having secured thereto a crank 11, by means of which latter the shaft 10 may be rotated. The said shaft has formed thereon a right and left hand screw-thread. Directly above the shaft 10 is a rock-shaft 12, which last also is journaled in said uprights 8, and serves not only as a rock-shaft, but as a guide-rod. The rod 9 and the shaft 12 pass freely through holes in the rear edges of the side pieces 13 13 of the hopper, the said side pieces 13 13 being caused to slide on the said guide-rods 9 and 12 when the screw-threaded shaft 10 is rotated, the latter shaft passing through a threaded hole in each of the said pieces 13 13. As the shaft 10 is provided with a right and left hand screw-thread, it will be clear that if the crank 11 is turned in one direction the said side pieces 13 will be caused to approach each other and if the said crank is turned in the opposite direction they will be caused to move away from each other and their movement from or toward a central point will be equal and simultaneous. The width of the hopper may be varied quickly and accurately by means of the mechanism described.

At the rear of the hopper are placed upright guides 14 14, which are secured to a sliding support 15, which latter may be adjusted and set in any position by means of the set-screw 16. The hopper, by adjusting the upright guides 14 14, may be adapted to hold blanks of various depths.

The front edges of the blanks are held in position by an upright 17, the lower end of which constitutes a gage beneath which the bottom blank is pushed forward by the feeding device. 171 is an adjusting-screw by means of which to vary the height of the said upright.

A pile of blanks is shown in position at 18, Fig. 3, and before the lowermost blank of the pile is moved from its position in the hopper the sides and front edges thereof are supplied with paste. The blank then is fed forward to a position directly above the box-support H into position to be applied to the box end. For the purpose of applying paste to the lowermost blank in the hopper I provide three pasters. Two of these are shown at 19 and 20, and they apply paste to the side edges of the end piece. The other paster 21 applies paste to the front or lower edge of the end piece. The pasters 19 and 20 are supported from the respective end pieces 13 13 of the hopper and have vertical movement toward and from the lowest end piece in the hopper. The paster 19 is shown in Fig. 3 in its lowermost position, in which it will be immersed in the paste which is contained in the paste-pan 22, which latter is located directly beneath the hopper. The pasters preferably are thin strips of metal, the upper edges of which come in contact with the under surface of the end piece and apply the paste thereto. The said pasters 19 and 20 are both supported and operated in the same manner.

A rod 23 is applied to each of the end pieces 13 of the hopper, said rod sliding vertically in bearings 24, formed on said side pieces 13. The lower end of each rod 23 has secured thereto a paster, so that the vertical movement of the rod will cause the paster to be moved vertically. The rear end of each paster has secured to the same a short guide-rod 25, which latter is guided by a projection 26 on the rear portion of the corresponding side piece 13. From each rod 23 projects a pin with which the forked end of an arm 27 engages. The arms 27 27 are splined on the rock-shaft 12, so that they may slide on said shaft, and the hub of each of said arms is located between the adjacent side piece 13 and a piece 131, that is secured to a projection from such side piece by a screw 132, so as to cause the arms to move in unison with the movements of the side pieces 13 13 of the hopper when the latter are adjusted toward or from each other by means of the right and left hand screw 10. It will be clear that if the shaft 12 is rocked the arms 27 will be moved upwardly or downwardly, moving the vertical slide-rods 23 and the pasters secured thereto. For the purpose of rocking the shaft 12 I provide an arm 28, which is secured to said shaft and to which the connecting-rod 29 is pivoted.

The lower end of the rod 29 is pivoted to an arm 30, secured to a short shaft 31. On the shaft 31 is secured an arm 32, which is pivotally connected with the connecting-rod 33, the lower end of which is moved in one direction by a cam 331 on the main shaft J and in the other direction by a spring 332. By this means at each revolution of the main shaft the pasters 19 and 20 are moved upwardly out of the paste in the pan 22 into contact with the lowermost blank in the hopper and then are moved downwardly again into the paste. The forward ends of the pasters 19 and 20 are notched or hooked so as to engage with the lower edge of the paster 21 (see Fig. 2) and thus support the said paster 21, so that the latter ascends and descends simultaneously with the raising and lowering of the pasters 19 and 20. The paster 21 extends from side to side of the machine (see Fig. 2) and is secured at each end to the vibrating arms 34 34, which arms are pivoted at their rear ends at 35 to bosses 36 36 on the frame.

Since the arms 27 27, which engage and operate the vertically-sliding rods 23 23, are splined on the rock-shaft 12 and are connected with the side pieces 13 13 of the hopper, they are moved whenever the said side pieces 13

are moved to adjust the machine to end pieces of a different size, and since the pasters 19 and 20 are supported from the said side pieces 13 13 of the hopper by means of the rods 23 and 26 an adjustment of the pasters is obtained simultaneously with the adjustment of the side pieces of the hopper. It will also be noted that by this arrangement the pasters always maintain the same position relatively to the said side pieces of the hopper, and the paste therefore always is applied to the end pieces at the right distance from the edge thereof. As the front edges of the end pieces in the hopper are always in the same position in the machine, the paster 21, which applies paste to said front edges, does not require adjustment.

After the paste is applied to the lowermost blank or end piece by the mechanism above described the said blank is moved by the feed mechanism from its position in the hopper forward to a position above the box-body on the support H. The feed mechanism comprises a reciprocating carrier 40, which slides in ways 41 41, Fig. 2. The forward movement of the carrier is sufficient to move said blank or end piece from its position in the hopper forward to a position above the box-body on the support H. At the end of said forward movement the front edge of the said blank or end piece comes in contact with the stops 43 43, (see Fig. 1,) and thus the blank or end piece is positioned accurately. The stops 43 43 are secured on a rock-shaft 44, which latter is journaled in the front upper part of the machine and is provided at one end (see Figs. 1 and 3) with an arm 45, which is connected pivotally with a rod 46, the rear end of said rod being connected pivotally with one arm of the bell-crank 47, which latter is pivoted on a stud set on the inside of one of the side frames B. The other arm of said bell-crank is pivoted to a link 48. The lower end of said link 48 is provided with a slot which engages a pin 49 on the connecting-rod 29. A spiral spring 50 is secured at one end to a pin 51 on said link 48 and at the other end to the pin 49. The spring 50 tends to pull the link 48 downwardly and keep the upper end of the slot in said link against said pin. By this arrangement a slight lost motion is permitted, so that the stops 43 may yield slightly when the end piece is carried forward against the same. Should the end piece be carried forward farther than is necessary, the stops 43 43 will move it back into its proper position as soon as the carrier 40 has begun to recede. After the box rest or support has been moved upwardly to press the end piece firmly onto the box-body the said support moves downwardly, carrying with it the box-body with the end piece applied thereto. During this downward movement it is desirable that the stops 43 should be out of the way, inasmuch as otherwise they are liable to catch the edge of the end piece and raise and loosen it from the box-body.

By the mechanism above described—namely, the rock-shaft 44, arm 45, connection 46, bell-crank 47, link 48, and spring 50—the said stops 43 43 are moved out of the way of the descending box end at the moment the downward movement of the box-support H begins, and thus the danger of impairing the work done by its catching the stops 43 43 in its downward movement is avoided.

For the purpose of operating the feed-slide or carrier 40 I provide a rod 550, (see Fig. 4,) which is connected pivotally at its forward end at 51 with the rear end of the said carrier 40. The rear end of the rod 550 is provided with an adjusting-sleeve 52, which is screwed thereon and which is pivotally connected with the arm 53. The latter is secured to a rock-shaft 54, journaled in a projection 55 from the spider or cross-frame C. On the rock-shaft 54 is also secured an arm 56, which is pivotally connected with an adjustable sleeve 57 on the upper end of the rod 58. The rod 58 passes through a hole in the cap 59, the latter being secured to the end of the sleeve or hollow shaft 60. The lower end of said sleeve 60 is secured in the boss 61 of the strap 62, surrounding the eccentric on shaft J. Inside the sleeve 60 is placed a spiral spring 63, which encircles the rod 58, and which is placed between the cap 59 and a nut 64 on the lower end of the said rod 58. By this means a yielding connection is secured between the operating-eccentric and the feed-carrier, so that in case for any reason movement of the feed-carrier is prevented the feeding mechanism would not be broken or injured, the spring 63 being of sufficient strength to permit a rotation of the eccentric if the carrier 40 should be held fast.

By the devices above described an accurate and speedy adjustment of the machine may be made to adapt it to operate on boxes of different sizes, the end pieces may be moved into position to be applied to the box end and positively and accurately placed in the latter position, and the liability of the feeding mechanism to become broken or injured is reduced to a minimum.

What I claim is—

1. In a box-ending machine, the combination with a hopper for the box-end blanks having two upright side pieces movable toward and from each other on guides, of a right and left hand screw-shaft having threaded connection with said side pieces, pasting devices for the edges of the said blanks, supports for said pasting devices connected with the side pieces of the hopper, a rock-shaft, arms on said rock-shaft connected to said supports, means to slide said arms along on said rock-shaft in unison with the adjustment of the side pieces, and means to actuate the said rock-shaft, substantially as set forth.

2. In a box-ending machine, the combination with a carrier which carries the box-end blanks into position, of a rock-shaft having stops thereon which check the forward move-

ment of the blanks, and operating mechanism for said rock-shaft, including a spring which permits lost motion and a yielding action to the stops when the end blank is moved forward too far, and which moves the blank back to proper position when the carrier recedes, the turning of the rock-shaft also moving the stops out of the path of the box when the box descends after the end is attached, substantially as described.

In testimony whereof I affix my signature in presence of two witnesses.

EUGENE H. TAYLOR.

Witnesses:
WM. A. MACLEOD,
CHAS. F. RANDALL.