(No Model.)

J. KILBURN.

SPINDLE SUPPORT.

No. 590,316. Patented Sept. 21, 1897.

FIG. 2.

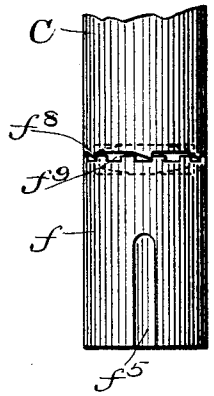

FIG. 1.

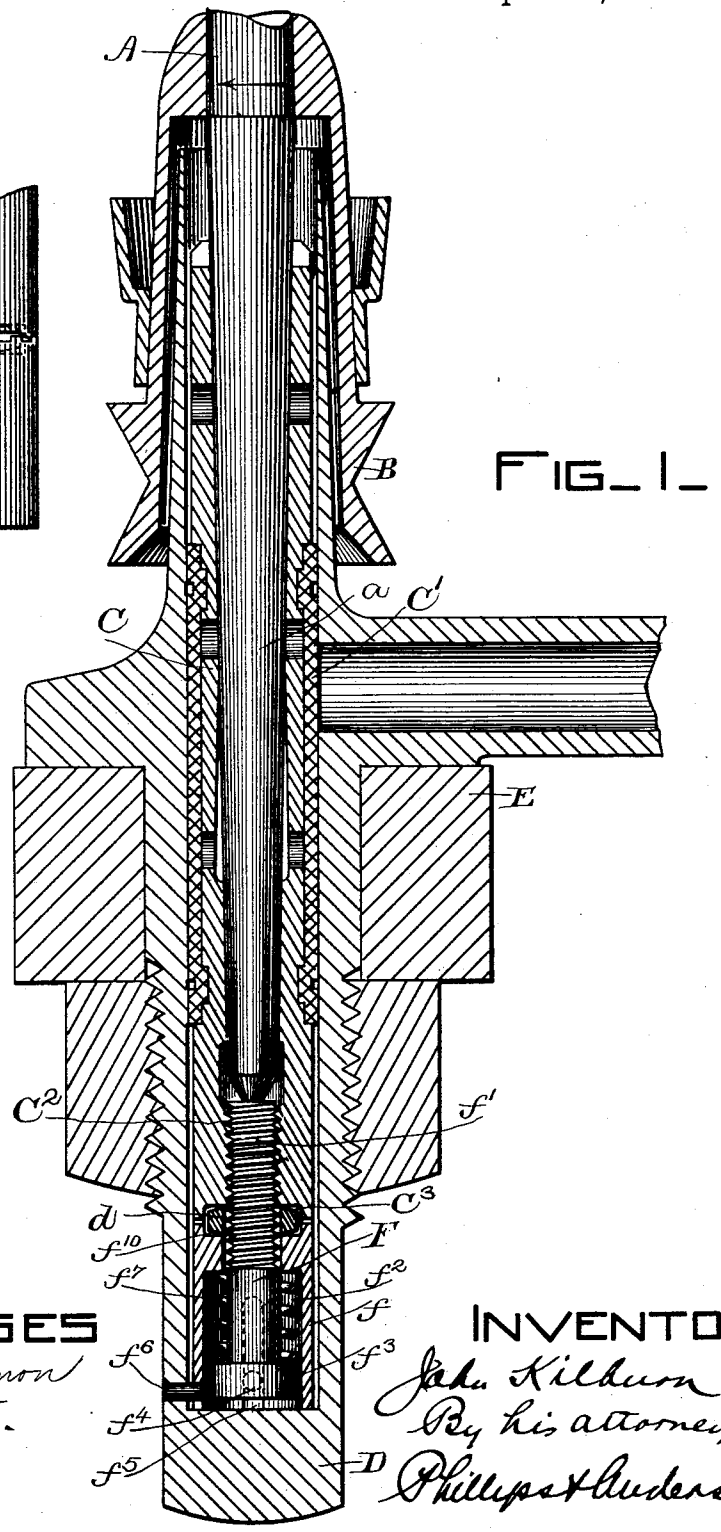

WITNESSES

W. E. Shannon

C. E. Hughes.

INVENTOR

John Kilburn,

By his attorneys

Phillips & Anderson

THE NORRIS PETERS CO., PHOTO-LITHO., WASHINGTON, D. C.

UNITED STATES PATENT OFFICE.

JOHN KILBURN, OF BELMONT, MASSACHUSETTS.

SPINDLE-SUPPORT.

SPECIFICATION forming part of Letters Patent No. 590,316, dated September 21, 1897.

Application filed December 2, 1896. Serial No. 614,252. (No model.)

To all whom it may concern:

Be it known that I, JOHN KILBURN, a citizen of the United States, residing at Belmont, in the county of Middlesex and State of Massachusetts, have invented certain new and useful Improvements in Spindle-Supports; and I do hereby declare the following to be a full, clear, and exact description of the invention, such as will enable others skilled in the art to which it appertains to make and use the same.

The present invention relates to improvements in spindle-supports, whereby, as the tapered pintle of the spindle wears off or wears into its step, the relative longitudinal position of the step and bolster is automatically adjusted to decrease the friction developed by the rotation of the pintle within the inclined inner walls of the bolster, and the bolster and step when adjusted, as above stated, are held in their adjusted position.

The present invention consists in certain improvements in the form and arrangement of mechanism shown and described in another application for Letters Patent of the United States filed by me on an even date herewith, Serial No. 614,251.

A preferred form of the present invention is illustrated in the accompanying drawings, in which—

Figure 1 represents a vertical section through a spindle-support embodying the same, showing a portion of the spindle and other parts in elevation. Fig. 2 is a side view of the lower portion of the bolster and the pintle-sleeve.

Similar letters of reference refer to similar parts throughout both the views.

In the drawings, A represents the lower portion of a spindle, which carries the usual sleeve-whirl B, and a spindle-pintle *a*, tapered as is usual in spindles of this class.

The bolster C is shown as surrounded by the usual wicking or other form of elastic packing C′.

The bolster-case is shown at D, and E represents the spindle-rail.

All the above-named parts, except as hereinafter specified, may be and conveniently are of the usual construction, and their form and arrangement may be varied without any departure from the present invention.

As shown in the drawings, the spindle-pintle *a* rests upon the pintle F, the top of which forms the step.

To adjust the relative longitudinal position of the bolster and step, I prefer to move the step longitudinally of the bolster while the bolster is held from longitudinal movement with reference to the bolster-case, an arrangement which, while I do not consider my invention in several of its generic features as limited thereto, I consider to be a marked improvement over the method of securing such result by a movement of the bolster, as proposed in the prior art.

To secure the result above suggested, in the form of my invention shown in the drawings the upper portion f' of the pintle F is threaded and engages correspondingly-threaded bearings C^2 in the bottom of the bolster C. Below the bolster C the pintle F is extended into the bore of what I have herein termed the "pintle-sleeve" *f*, which, for a portion of the length, is fitted to the pintle F externally of its threads, and in which the pintle F is free to reciprocate.

The pintle-sleeve *f*, either directly or upon a rocker washer or other suitable device interposed, for the purposes hereinafter described, supports the bolster C and restrains it from downward longitudinal movement, the sleeve *f* conveniently resting upon the bottom of the bolster-case D. The lower portion of the bore of the sleeve *f* is enlarged to form a recess f^2, into which the pintle F extends and within which it is provided with a head or washer f^3, fitted to the recess f^2 and held from rotation by means of the pin f^4, which engage the vertical slot f^5 in the walls of the recess f^2, or by other convenient means.

The sleeve *f* may be conveniently held from rotation by means of the pin f^6, driven through the wall of the bolster-case D into a slot in the sleeve *f*.

To restrain the bolster C from upward longitudinal movement and to insure the operation of the clutch mechanism, as hereinafter described, I have provided a suitably-placed spring, conveniently the coiled spring f^7, which surrounds the pintle F, bearing at one end against the head or washer f^3 and at the other end against the top of the recess f^2.

The above-described arrangement is such

that a rotation of the bolster C in one direction, by means of its threaded connection with the pintle F, raises the pintle F, while its rotation in an opposite direction depresses said pintle.

As shown in the drawings, the bolster C is arranged to be positively restrained from rotation in the direction required to depress the pintle F and is permitted to rotate in the direction required to raise the pintle F only when a certain amount of power is applied thereto, a result which I secure by a suitably-placed controlling or clutch mechanism conveniently the following: Upon the lower end of the bolster C, preferably adjacent to its periphery, are formed a series of downwardly-projecting teeth f^8, of unequal pitch upon opposite sides, conveniently beveled upon one side and perpendicular upon the other. The teeth f^8 engage a series of notches f^9, formed upon the top of the sleeve f, which notches may be rectangular in form or of corresponding shape but opposite inclination to the teeth f^8.

The above-described arrangement is such that the bolster C cannot be rotated to raise the pintle F unless sufficient power is applied thereto to overcome the weight of supported parts and the tension of the spring f^7, by means of the inclined edges of the teeth f^8, and the bolster C, unless raised by the operator, as hereinafter described, is positively held from rotation in the direction required to depress the pintle F.

To permit the slight lateral movement of the bolster required to enable the spindle to find its true center of rotation under an unbalanced load, I have in the device of the drawings made the following provision: Upon the under side of the bolster C is formed a circular recess C^3, and under the same a correspondingly-shaped recess f^{10}, in the top of the sleeve f. The recesses C^3 and f^{10} together form a chamber, within which I locate what I have herein termed a "rocker-washer" d, which rests upon the sleeve f and supports the bolster C. As shown, the rocker-washer d consists of a rounded or convexed faced washer surrounding the pintle F and fitted loosely thereto externally of its threads. The washer d supports the bolster C at such height above the sleeve f that when the bolster C is vertical the teeth f^8, while they engage the notches f^9, do not firmly bottom therein, and the pintle F engages its threaded bearings C^2 with a loose fit, so that the bolster C is free to have a slight gyrating or wabbling movement on the washer d to allow the spindle A to find its true center of rotation under an unbalanced load.

The operation of my invention as applied to the device of the drawings is as follows: As the lower end of the spindle-pintle a wears off or wears into the step the pintle a has a tendency to bind on the inclined walls of the bolster C and to rotate with increased friction, exerting an increased effort to rotate the bolster. When such effort is sufficient, acting through the inclined edges of the teeth f^8, to raise the supported parts and overcome the tension of the spring f^7, the spindle rotating in the direction of the arrow-head, Fig. 1, the bolster C will be turned in the direction required to raise the pintle F and step formed thereon in the bolster C, the teeth f^8 turning over the teeth f^9. As the pintle F is raised, as above stated, it raises the tapered spindle-pintle a of the spindle A in the bolster C, causing it to fit less tightly between the inclined inner walls of the bolster, and less friction is developed by its rotation. When the friction developed by the rotation of the spindle in its bolster does not exert sufficient effort to rotate the bolster to overcome the weight of supported parts and the tension of the spring f^7, as before described, the weight of said parts and the tension of the spring f^7 forces the teeth f^8 into the next adjacent notches f^9, and the pintle F and step thereon are retained in the position to which they have been raised by the prior rotation of the bolster and continue in such position until the wear of parts produces a sufficient increase of friction to cause a recurrence of the operation above stated.

It will be noted that the spring f^7 not only secures a positive operation of what I have termed the "clutch" mechanism to hold the step in its adjusted position, but affords a convenient means of regulating the power required to raise the step, springs of different strength being readily substituted one for the other in the device. The spring f^7 also adapts the device for successful use in connection with light-weight spindles, where a device controlled solely by the weight of parts might not be practical.

To readjust the step when a worn spindle is removed and a new spindle inserted, the operator removes the parts from the bolster-case and, disengaging the clutch mechanism, rotates the bolster C until the step is set at the proper height therein.

Having thus described my invention and its mode of operation, I claim as novel and desire to secure by Letters Patent of the United States—

1. The combination with a spindle, its bolster and step, of means for holding the bolster in a substantially fixed longitudinal position, and connections between the bolster and step whereby a rotation of the bolster while held in its substantially-fixed longitudinal position effects a longitudinal movement of the step along the bolster, substantially as described.

2. The combination with a spindle, its bolster and step, of means for adjusting the relative longitudinal position of the bolster and step, and spring-controlled mechanism for retaining the bolster and step in their adjusted position, substantially as described.

3. The combination with the bolster and its support, of a rocker-washer interposed be-

tween the bolster and its support, and means to retain the rocker-washer in position under the bolster, substantially as described.

4. The combination with the bolster and its support, of means to restrain the bolster-support from rotation, and interlocking connections between the bolster and its support, arranged to permit a rotation of the bolster in one direction and to restrain the bolster from rotation in an opposite direction, substantially as described.

5. The combination with the bolster, of a clutch mechanism arranged to permit a rotation of the bolster in one direction and to restrain the bolster from rotation in an opposite direction, substantially as described.

6. The combination with a bolster, of a threaded bearing formed in the base of the bolster, a threaded pintle engaging said bearing, a pintle-sleeve below the bolster, in which said pintle is free to reciprocate, and means for restraining said pintle from rotation, substantially as described.

7. The combination with a bolster, of a threaded bearing formed in the base of the bolster, a threaded pintle engaging said bearing, a pintle-sleeve below the bolster in which said pintle is free to reciprocate and a spring arranged to restrain the upward movement of said pintle, substantially as described.

8. The combination with a bolster and its support, of a threaded pintle engaging the bolster and free to reciprocate in the bolster-support, and means to restrain the pintle and support from rotation, substantially as described.

9. The combination with a bolster, of an inclined bearing therefor, arranged to permit the rotation of the bolster in one direction when sufficient force is applied thereto and to restrain it from rotation in the opposite direction, substantially as described.

10. The combination with a spindle and its bolster, of means for restraining the bolster from rotation in the direction of the spindle, and a suitably-placed spring arranged to control said restraining means, and to permit a rotation of the bolster with the spindle, by an increase of friction between the spindle and bolster, substantially as described.

In testimony whereof I affix my signature in presence of two witnesses.

JOHN KILBURN.

Witnesses:
A. E. WHYTE,
A. O. ORNE.