June 18, 1968 R. A. DERY 3,388,738

ROOF DE-ICER

Filed May 23, 1966 2 Sheets-Sheet 1

Fig. 1.

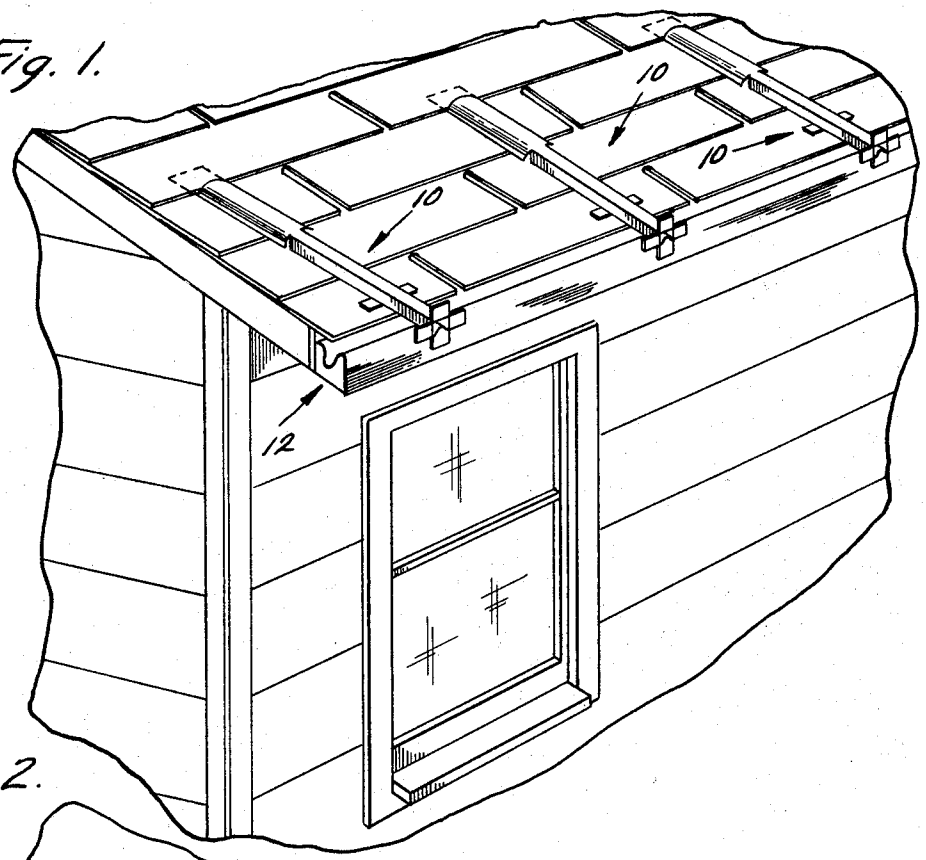

Fig. 2.

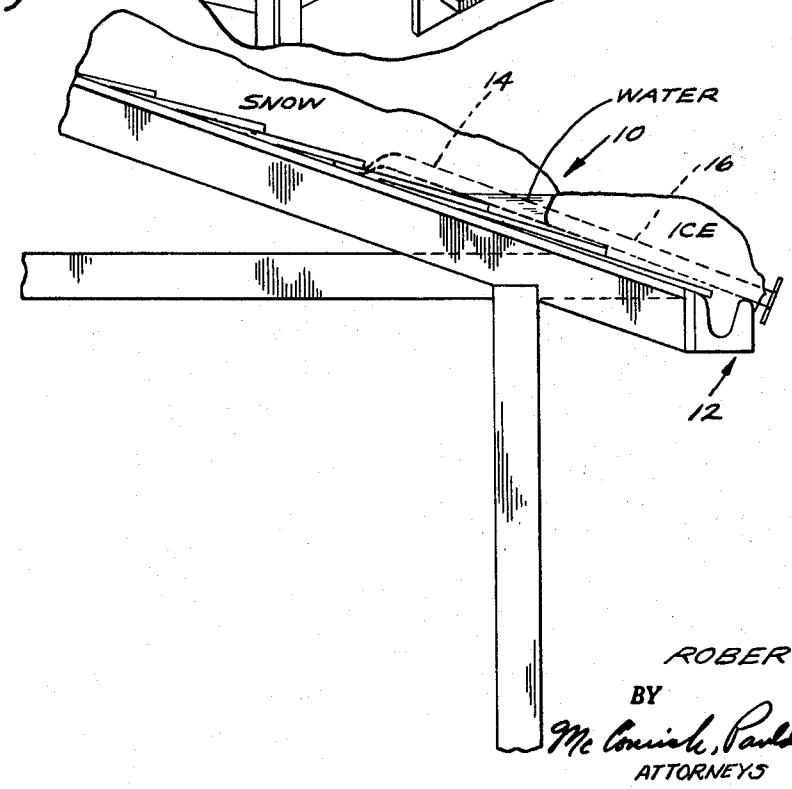

INVENTOR.
ROBERT A. DERY

BY
McCormick, Paulding & Huber
ATTORNEYS

June 18, 1968 R. A. DERY 3,388,738

ROOF DE-ICER

Filed May 23, 1966 2 Sheets-Sheet 2

Fig. 3.

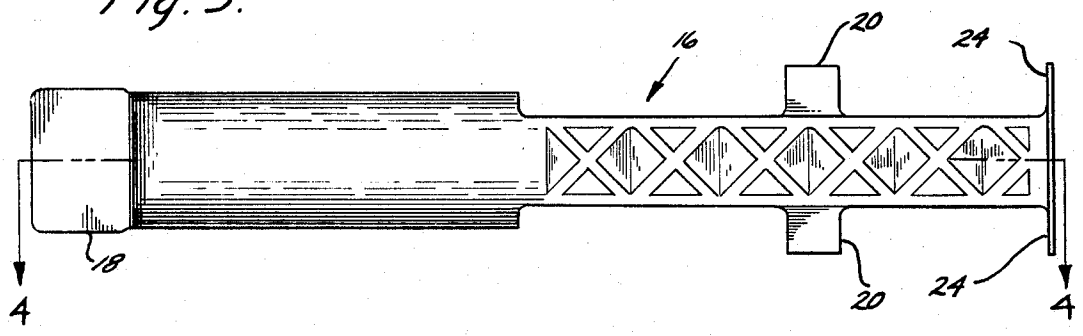

Fig. 4.

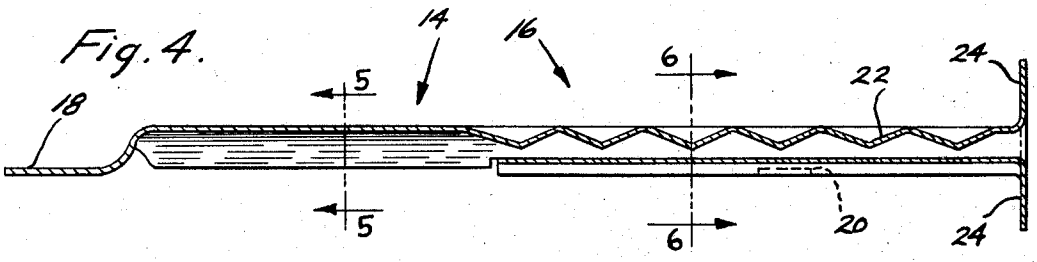

Fig. 5.

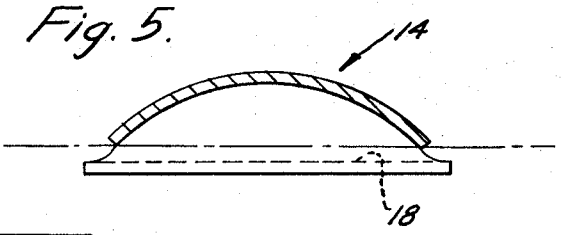

Fig. 6.

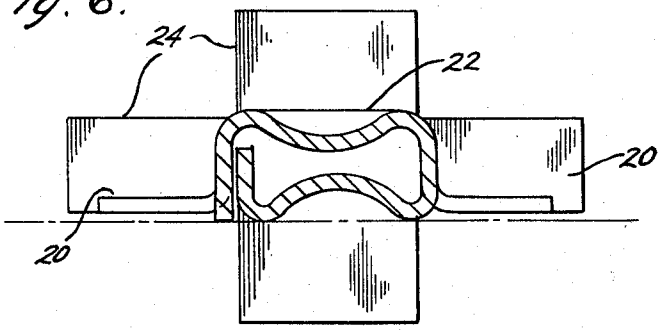

United States Patent Office

3,388,738
Patented June 18, 1968

3,388,738

ROOF DE-ICER

Robert A. Dery, Johnnycake Lane,
New Hartford, Conn. 06057

Filed May 23, 1966, Ser. No. 552,233
9 Claims. (Cl. 165—47)

ABSTRACT OF THE DISCLOSURE

A device for use on an inclined roof to melt ice thereon and including an upper section of concave contour to trap heat from an underlying attic defining portion of the roof. A lower section of the device is hollow and overlies an eave-defining roof portion. Tabs at the lowermost end portion of the lower section absorb solar heat energy so that the device can melt a passageway through ice formations on the roof.

This invention relates to devices for melting ice and snow from an inclined or pitched roof structure.

One object of the present invention is to provide a roof de-icing device which utilizes heat from the attic defining portion of a roof structure in order to melt ice formed on the lower eave-defining portion of such roof structure.

Another object of the present invention is to provide a roof de-icing device which utilizes heat from a sub-adjacent attic, as well as heat from the sun and heat from the outside atmosphere, in order to melt snow and ice from a roof structure, and more particularly from the eave-defining portion of the roof structure.

Still another object of the present invention is to provide a roof de-icing device which melts downwardly sloping passageways through the ice which sometimes forms on the lower eave-defining portion of a roof structure as a result of periods of alternately melting and freezing weather conditions. Accumulated water trapped by said ice above the relatively warmer upper attic-defining portion of the roof structure is thereby drained through these passageways.

The drawings show a preferred embodiment of the invention and such embodiment will be described, but it will be understood that various changes may be made from the construction disclosed, and that the drawing and description are not to be construed as defining or limiting the scope of the invention, the claims forming a part of this specification being relied upon for that purpose.

Of the drawings:

FIG. 1 shows, in perspective, a downwardly sloping roof structure to which a plurality of devices of the present invention have been anchored.

FIG. 2 is a vertical sectional view through the roof structure shown in FIG. 1 showing a typical winter-time build-up of ice and snow caused as a result of alternate periods of thawing and freezing. A device of the present invention is shown in broken lines in this figure.

FIG. 3 is a plan view of one of the de-icing devices shown in FIG. 1.

FIG. 4 is a sectional view of the de-icing device of FIG. 3, being taken on line 4—4 of that figure.

FIG. 5 is a sectional view taken along the line 5—5 of FIG. 4.

FIG. 6 is a sectional view taken along the line 6—6 of FIG. 4.

Turning now to the drawings in greater detail, FIG. 1 shows a roof structure of conventional design having a plurality of shingles attached thereto and having a plurality of longitudinally spaced de-icing devices **10, 10** of the present invention attached to the roof so as to melt downwardly sloping passageways through the ice which builds up on the lower portion of the roof adjacent the eaves through **12** in the manner shown in FIG. 2. The devices **10, 10** of the present invention are preferably between two to three feet long, and are spaced apart by a distance of three to four feet along the roof. Preferably, and as shown, the lower ends of these devices extend downwardly and outwardly some distance beyond the side edge of the eaves trough **12** for a purpose to be described. The upper ends of each of the devices **10, 10** will be seen to extend upwardly along the exterior surface of the roof and to be received beneath the sixth course of shingles. While the precise anchor point for the upper ends of the devices **10, 10** is not critical, it should be noted that these devices preferably extend upwardly along the roof to a point which is well within the attic-defining or region of the roof as distinguished from the lower eave-defining portion thereof.

As mentioned above, FIG. 2 shows in detail a typical configuration of ice and snow on an inclined roof structure which is apt to be encountered in nothern climates where alternate periods of thawing and freezing create a situation detrimental to the structural integrity of the roof structure. As shown the snow and ice melt to form water at the location indicated, due to the ice build-up over the slightly lower eave-defining portion of the roof structure. The heat from the attic tends to keep this water from freezing, with the result that the water eventually backs up under the shingles and seeps through the roof structure into the attic damaging the interior of the house.

Prior art roof de-icing devices have not provided a satisfactory solution to the problem of disposing of such a pocket or reservoir of water resulting from the relatively impregnable ice barrier which builds up over the eave-defining portion of the roof structure. It is an important feature of the present invention that passageways are melted through this ice so as to drain off the reservoir of water depicted in FIG. 2.

Each of the de-icing devices **10** comprises an elongated member having an upper section **14** which is adapted to contact a segment of said attic roof defining portion as indicated in broken lines in FIG. 2, and as so arranged it will be apparent that the upper section **14** tends to absorb heat from the sub-adjacent attic in such a manner as to heat the member **10** to a temperature corresponding approximately to that of the attic-defining portion of the roof structure. In accordance with the present invention, the member **10** is constructed of heat conductive material so that its entire length is continuously heated to substantially this temperature. It will be apparent that the roof structure being made of wood, or other similar non-heat conductive material, cannot cause heat to be conducted from the attic-defining upper portion to the eave-defining lower portion discussed above. This fact explains the ice build-up shown in FIG. 2. The heated attic portion is thus effectively insulated from the colder eave-defining portion of the roof.

The roof de-icing device **10** shown in FIG. 3 also com-

prises a lower section **16** which is integrally connected to the upper section **14** and is arranged in overlying relation to the lower eave portion of the roof as shown in FIG. 2. In further accordance with the present invention, the lowermost end portion of the lower section **16** defines solar heat absorbing tabs to be described in greater detail hereinbelow. The tabs extend downwardly beyond the eaves trough **12** as shown in FIGS. 1 and 2 so as to further heat the device **10**.

Considering the upper section **14** in greater detail, FIG. 4 shows said section as having an upper end **18** which is formed flat so as to fit beneath a shingle in order to provide a convenient anchor for holding the device to a shingled roof. The actual manner of attachment may comprise a glob of roofing cement or tar, or even a common roofing nail of the type used to fasten the shingles to the roof structure. With further reference to the upper section **14**, FIG. 5 shows said upper section as comprising a relatively wide strip of sheet metal which is formed into an arcuate shape so as to define a concave lower surface forming a chamber between the member **10** and the attic roof, indicated by the phantom line in FIG. 5. As so constructed, it will be apparent that warm air is trapped beneath the concave lower surface of the upper section **14**, and the roof, in order to further increase the heat retention capability of the device. Although not shown, it is noted that the convex upper surface of the section **14** might be insulated in order to further enhance its heat retention characteristics.

Considering now the construction of the lower section **16** of the de-icing device **10**, FIGS. 3 and 6 show said lower section as including laterally outwardly protruding tabs **20, 20** which like the flat upper end portion **18** of the device **10** provide a convenient roof attachment or anchor point. As best shown in FIG. 6, the lower section **16** of the device **10** is generally four-sided in cross-section with a top wall **22** having raised ribs arranged in a diamond-shaped pattern in order to increase the surface area of at least the lower portion which is exposed to the atmosphere. It should be noted that the diamond shaped rib pattern shown in the drawings has been enlarged for purposes of illustration, and that many more such ribs of smaller relative size might be used to advantage in accordance with the present invention. The top wall **22** integrally connects the lower section **16** to the upper section **14** and in fact the arcuate upper section **14** forms a continuation of the top wall **22** although it is somewhat narrower as shown in FIG. 3. As so constructed the interior of the lower section **16** is in communication with the underside of the upper section **14**. A bottom wall **26** of the four-sided lower section **16** is bent inwardly to provide laterally spaced lines of contact between the marginal side edges of the device and the eave-defining lower roof portion. This construction conserves the heat imparted to the member **10** by avoiding dissipation of said heat to the eave-defining roof portion.

As mentioned hereinabove, the lowermost end portion of the lower section **16** defines heat absorbing tabs **24, 24** which are integrally connected to, and form projections of, the corresponding side and wall portions of the four-sided lower section **16**. It should perhaps be noted that the size and configuration of these tabs may take any convenient form in order to best realize the heating effect of the sun during fair weather periods, and of the surrounding air during periods of above freezing temperatures. The tabs **24, 24** might be provided with raised ribs similar to those described hereinabove with respect to the lower portion of the top wall **22**. Still another possible variation would be to provide an outwardly and upwardly curving wire attached at its lower end to the lowermost end portion of the lower section **16** in order to further enhance the atmospheric and solar heating of the lower ribbed portion **16** just described. The integral tabs **24, 24** comprise the preferred

construction; however, and in further accordance with the present invention the tabs, and the part of the lower section **16** which overlies the eaves trough **12**, are preferably provided with a layer of solar heat absorbent paint (not shown). A flat black paint has been found to be quite satisfactory for this purpose.

By way of summary, the de-icing device **10** comprises a one-piece sheet metal conductor which can be placed on an inclined roof structure to melt passageways or channels through the ice build-up commonly encountered on the eave-defining portion of such a roof in the wintertime during periods of alternate nocturnal freezing and daytime thawing. The device has an upper section **14** adapted to absorb heat from the relatively warm attic-defining portion of the roof structure, and a lower section **16** which is somewhat narrower than the upper section **14**. The lower section **16** is arranged in heat conducting relation to the upper section **14** for melting passageways through such an ice build-up so that water trapped in the manner shown in FIG. 2 can be drained from the roof through the ice-free passageways created by several de-icing devices **10, 10** arranged in the manner shown in FIG. 1.

Further refinements of the basic de-icing device described above will be readily apparent to those skilled in the art. For example, the device might be electrically heated in order to further improve its ice melting capability, or its upper end **18** might be extended through the roof structure in order to draw even more heat from the attic.

Another refinement to the basic de-icing device would be to provide "snow hooks" in the upper surface thereof to prevent snow from sliding off a highly pitched roof of the type found on some older homes. It is noted that the presence of snow on the roof structure, as depicted in FIG. 2, does not detract from the function of the device itself, namely to drain off accumulated water through the ice build-up shown in that figure.

The invention claimed is:

1. The combination with a downwardly sloping roof having an attic-defining upper portion and an eave-defining lower portion, of at least one elongated member having an upper section which has a lower concave surface for defining a chamber with a segment of said attic roof portion in order to trap heat between said attic roof portion and said lower surface, said device further including a lower section integrally connected to said upper section and arranged in overlying relation to said eave roof portion, said member being fabricated of heat conductive material in order to provide a downwardly sloping continuously heated de-icing device for melting a passageway through the ice which forms on said eave roof portion during periods of alternately melting and freezing weather conditions.

2. The combination set forth in claim **1** wherein said lower section includes a lower end which defines solar heat absorbing tabs which extend downwardly beyond said roof in order to further heat said lower section.

3. The combination set forth in claim **1** wherein said upper section includes an upper end which is formed flat to fit beneath a shingle so as to provide a convenient anchor for holding said device to a shingled roof.

4. The combination set forth in claim **3** wherein said lower section includes laterally outwardly protruding tabs for further anchoring the device to said roof.

5. The combination set forth in claim **1** wherein said elongated member is formed of bent sheet metal, said lower section comprising a four-sided channel having at least four solar heat absorbing tabs which extend downwardly beyond said roof and are integrally connected to said channel sides.

6. The combination set forth in claim **5** wherein said lower section includes laterally outwardly protruding tabs integrally formed from said channel side walls to provide convenient roof attachment points for said device.

7. The combination set forth in claim 6 wherein said upper section comprises an arcuately bent sheet metal strip integrally connected to said flat upper end and to one of said lower section side walls.

8. The combination set forth in claim 7 wherein said lower channel shaped section includes a top wall integrally connected to said arcuately bent upper section, said top wall being formed with raised ribs at least along its lower portion to increase the surface area exposed to the outside atmosphere.

9. The combination set forth in claim 8 wherein said

lower channel shaped section includes a bottom wall which is arcuately bent to provide spaced lines of contact between the device and said eave-defining lower roof portion.

References Cited

UNITED STATES PATENTS

3,207,211 9/1965 Winterfelbt ---------- 165—47

ROBERT A. O'LEARY, *Primary Examiner.*

C. SUKALO, *Assistant Examiner.*