US 20230244540A1

(19) **United States**

(12) **Patent Application Publication** (10) **Pub. No.: US 2023/0244540 A1**

Kearney (43) **Pub. Date: Aug. 3, 2023**

(54) **MULTI-CLOUD CONTROL PLANE ARCHITECTURE**

(71) Applicant: **Oracle International Corporation**, Redwood Shores, CA (US)

(72) Inventor: **Luke Francis Kearney**, Seattle, WA (US)

(73) Assignee: **Oracle International Corporation**, Redwood Shores, CA (US)

(21) Appl. No.: **18/162,931**

(22) Filed: **Feb. 1, 2023**

Related U.S. Application Data

(60) Provisional application No. 63/306,007, filed on Feb. 2, 2022, provisional application No. 63/306,918, filed on Feb. 4, 2022, provisional application No. 63/321,614, filed on Mar. 18, 2022, provisional application No. 63/333,965, filed on Apr. 22, 2022, provisional application No. 63/336,811, filed on Apr. 29, 2022, provisional application No. 63/339,297, filed on May 6, 2022, provisional application No. 63/357,541, filed on Jun. 30, 2022, provisional application No. 63/388,925, filed on Jul. 13, 2022.

Publication Classification

(51) **Int. Cl.**
G06F 9/50 (2006.01)

(52) **U.S. Cl.**
CPC ***G06F 9/5072*** (2013.01); ***G06F 9/5077*** (2013.01)

(57) **ABSTRACT**

Techniques are described for providing a multi-cloud control plane (MCCP) in a first cloud infrastructure (included in a first cloud environment provided by a first cloud services provider) that enables services and/or resources provided in the first cloud infrastructure to be utilized by users of a second cloud environment, where the second cloud environment is different than the first cloud environment. The multi-cloud infrastructure enables a user associated with an account with a second cloud services provider to use, from the second cloud infrastructure, a first service from the set of one or more cloud services. The multi-cloud infrastructure creates a link between the account with the second cloud service provider and a tenancy created in the first cloud infrastructure for enabling using the first service by the user.

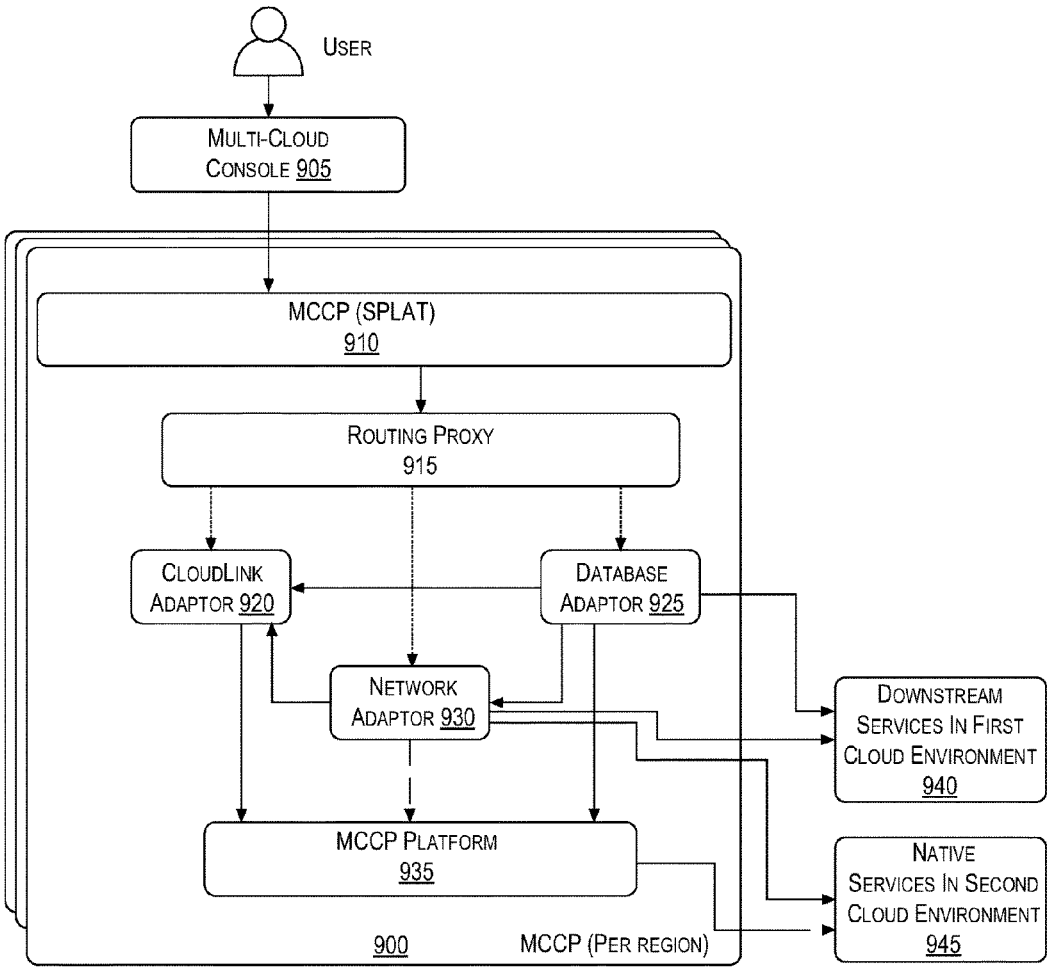

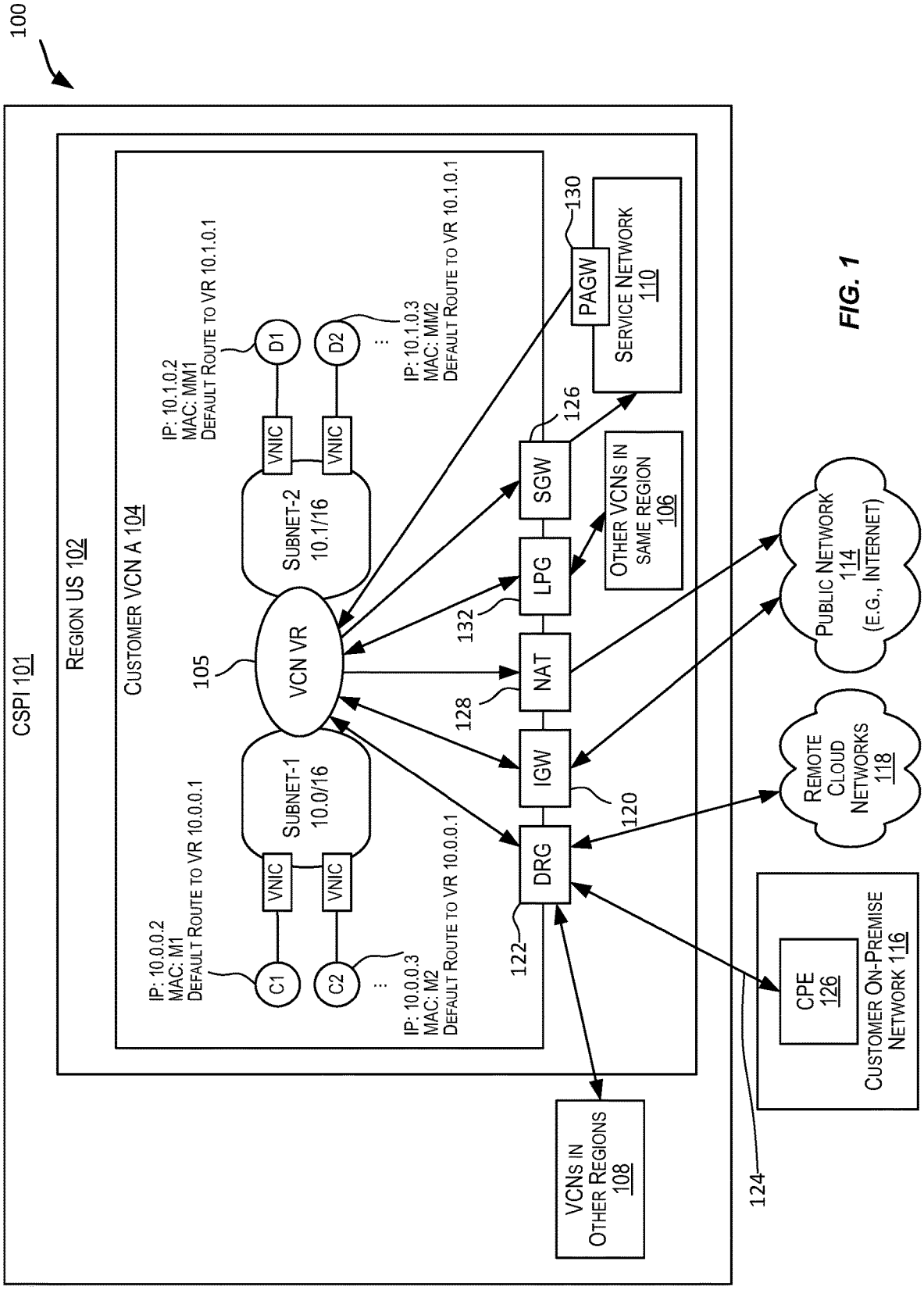
100
CSPI 101
REGION US 102
CUSTOMER VCN A 104
105
VCN VR
SUBNET-1
10.0/16
SUBNET-2
10.1/16
VNIC
C1
C2
D1
D2
IP: 10.0.0.2
MAC: M1
DEFAULT ROUTE TO VR 10.0.0.1
IP: 10.0.0.3
MAC: M2
DEFAULT ROUTE TO VR 10.0.0.1
IP: 10.1.0.2
MAC: MM1
DEFAULT ROUTE TO VR 10.1.0.1
IP: 10.1.0.3
MAC: MM2
DEFAULT ROUTE TO VR 10.1.0.1
DRG
IGW
NAT
LPG
SGW
PAGW
130
126
132
128
122
120
124
SERVICE NETWORK 110
OTHER VCNS IN SAME REGION 106
PUBLIC NETWORK 114 (E.G., INTERNET)
REMOTE CLOUD NETWORKS 118
CPE 126
CUSTOMER ON-PREMISE NETWORK 116
VCNS IN OTHER REGIONS 108

FIG. 1

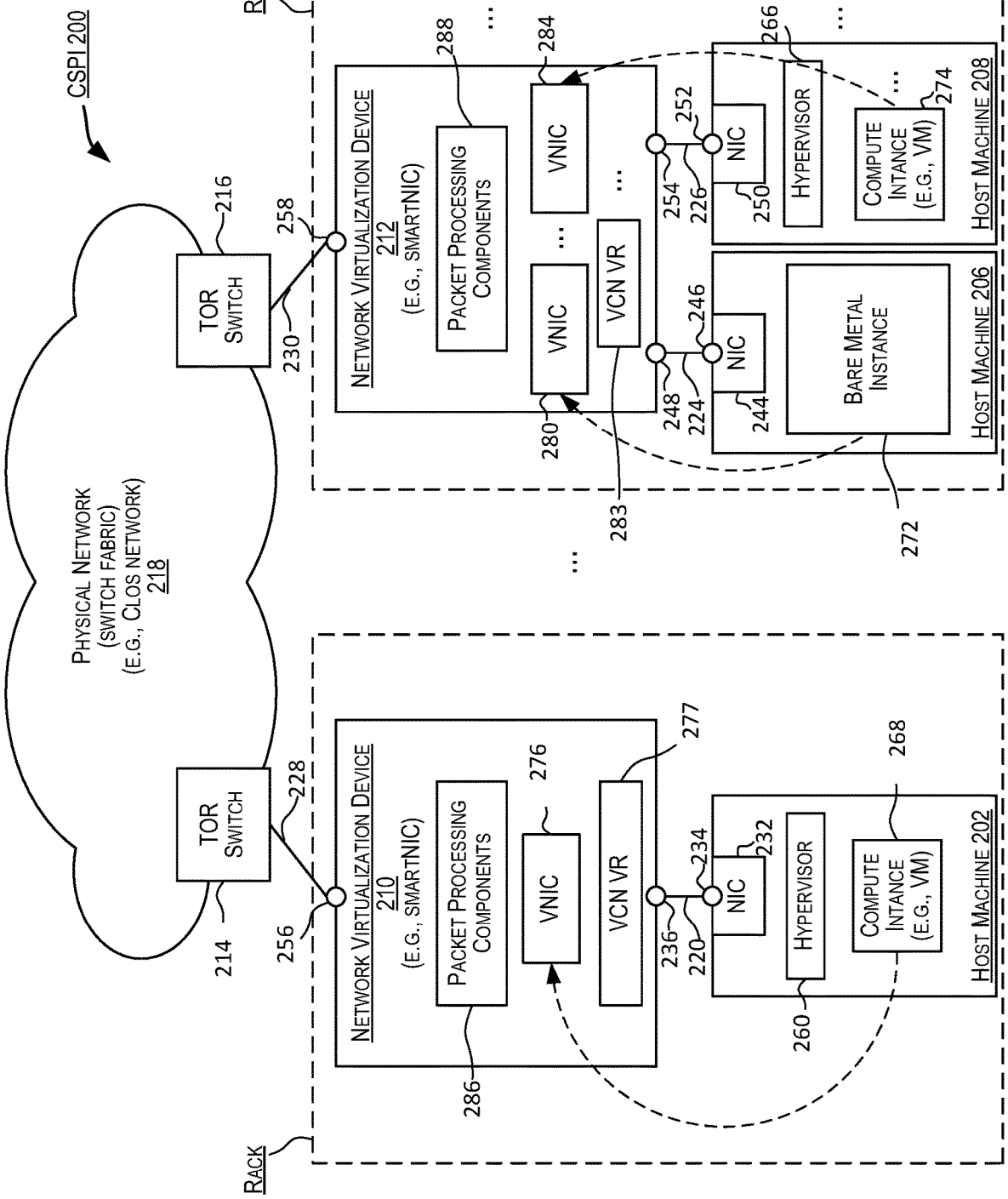
CSPI 200
PHYSICAL NETWORK (SWITCH FABRIC) (E.G., CLOS NETWORK) 218
TOR SWITCH
TOR SWITCH
214
216
228
230
256
258
RACK
RACK
NETWORK VIRTUALIZATION DEVICE 210 (E.G., SMARTNIC)
NETWORK VIRTUALIZATION DEVICE 212 (E.G., SMARTNIC)
PACKET PROCESSING COMPONENTS
VNIC
VCN VR
NIC
HYPERVISOR
COMPUTE INTANCE (E.G., VM)
BARE METAL INSTANCE
HOST MACHINE 202
HOST MACHINE 206
HOST MACHINE 208
220
232
234
236
244
246
248
250
252
254
260
266
268
272
274
276
277
280
283
284
286
288

FIG. 2

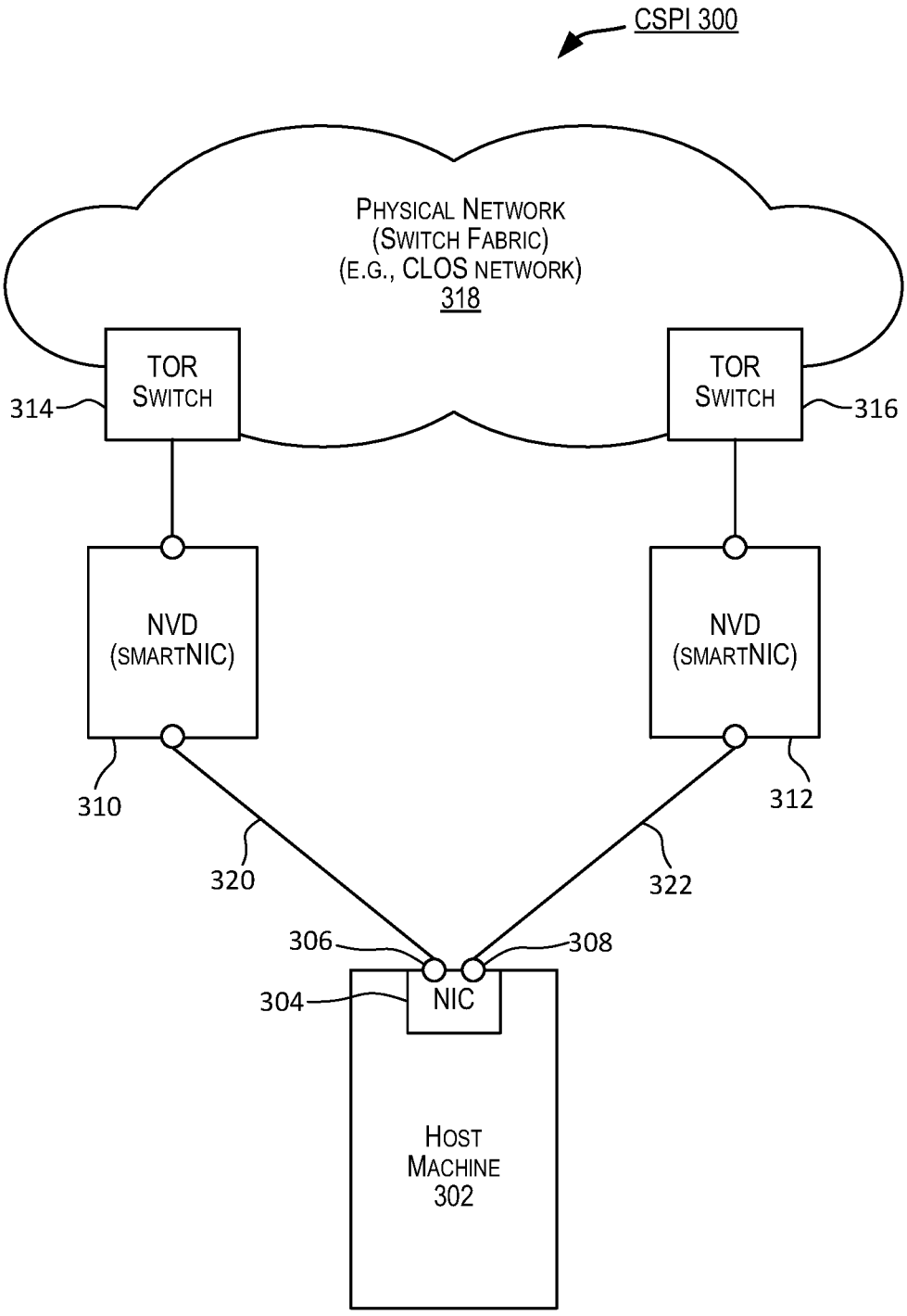
CSPI 300
PHYSICAL NETWORK
(SWITCH FABRIC)
(E.G., CLOS NETWORK)
318
TOR SWITCH
314
TOR SWITCH
316
NVD (SMARTNIC)
NVD (SMARTNIC)
310
312
320
322
306
308
304
NIC
HOST MACHINE 302

FIG. 3

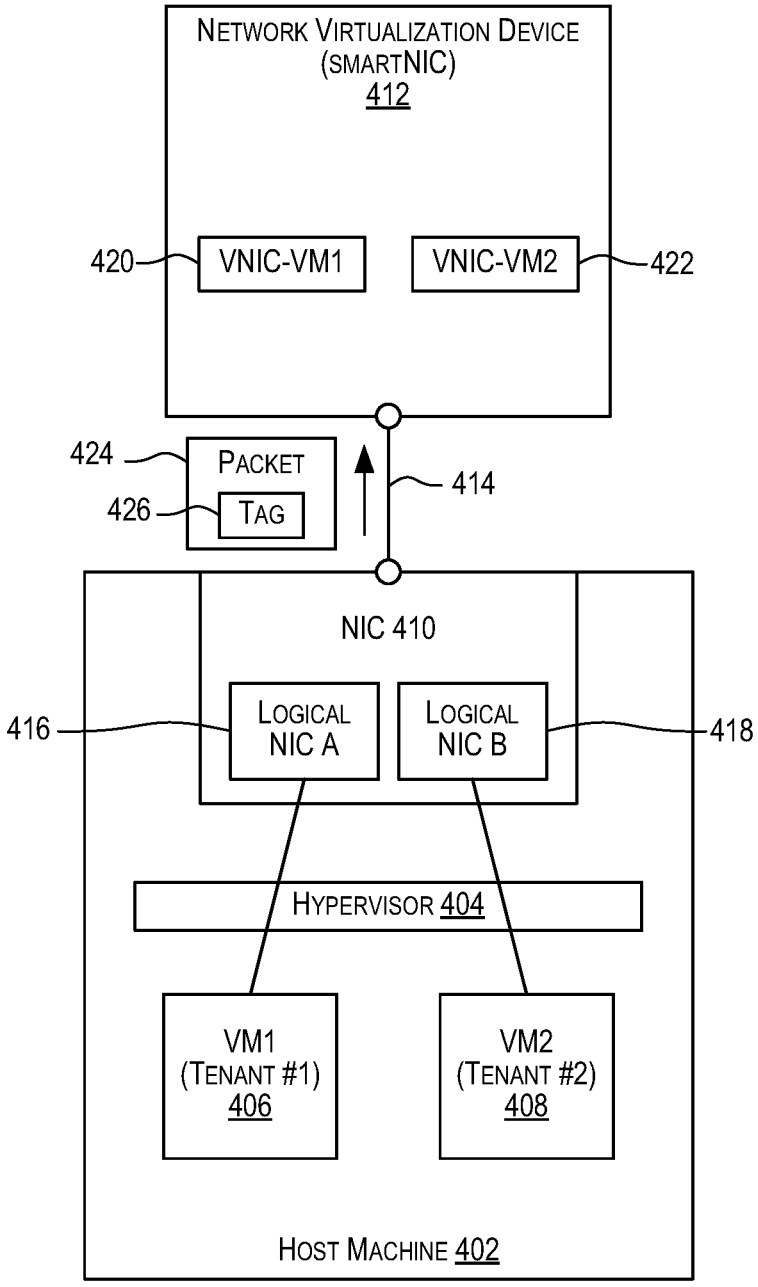
NETWORK VIRTUALIZATION DEVICE
(SMARTNIC)
412
420
VNIC-VM1
VNIC-VM2
422
424
PACKET
426
TAG
414
NIC 410
416
LOGICAL
NIC A
LOGICAL
NIC B
418
HYPERVISOR 404
VM1
(TENANT #1)
406
VM2
(TENANT #2)
408
HOST MACHINE 402

FIG. 4

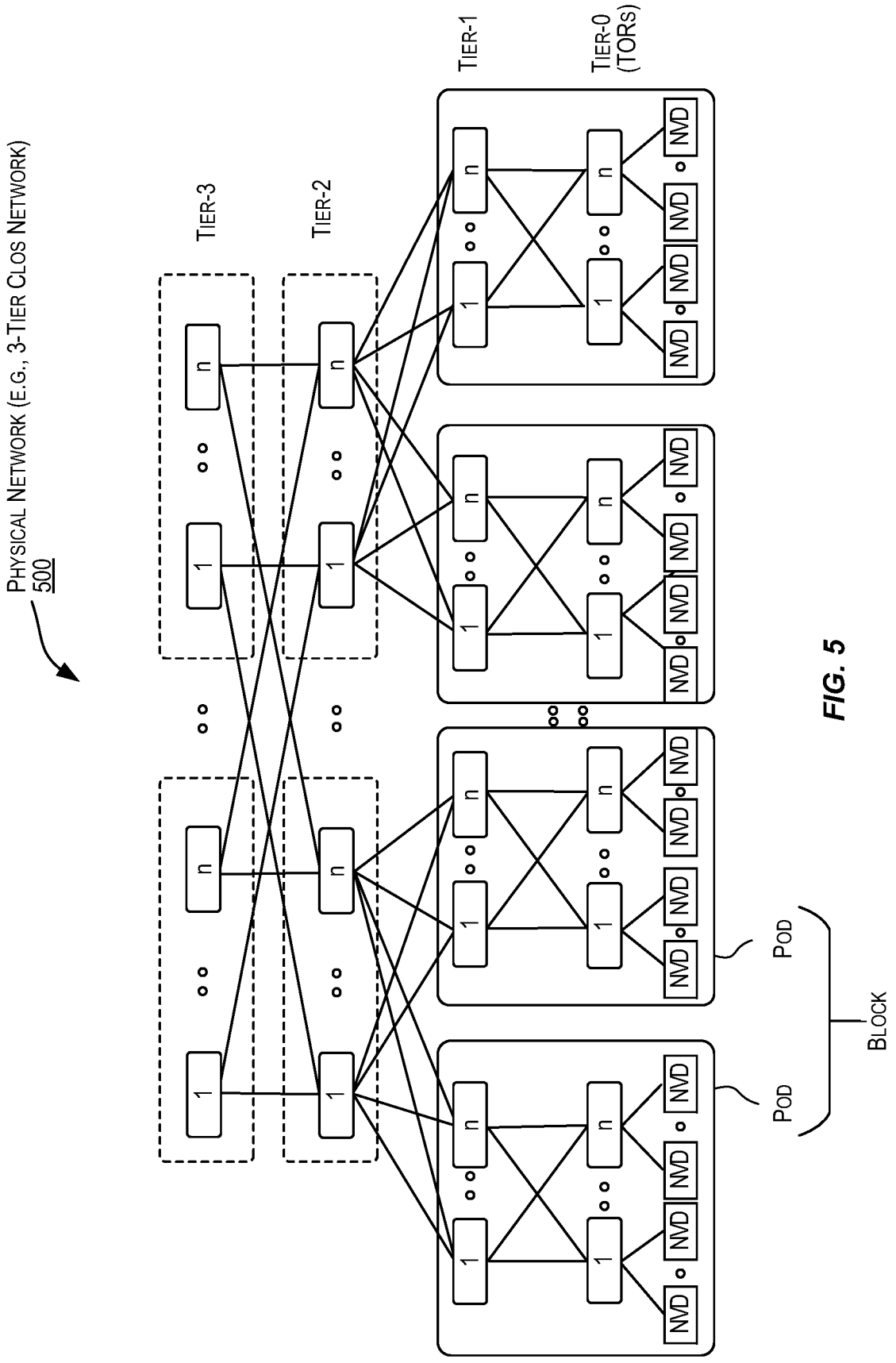
PHYSICAL NETWORK (E.G., 3-TIER CLOS NETWORK)
500
TIER-3
TIER-2
TIER-1
TIER-0 (TORS)
n
1
NVD
POD
POD
BLOCK

FIG. 5

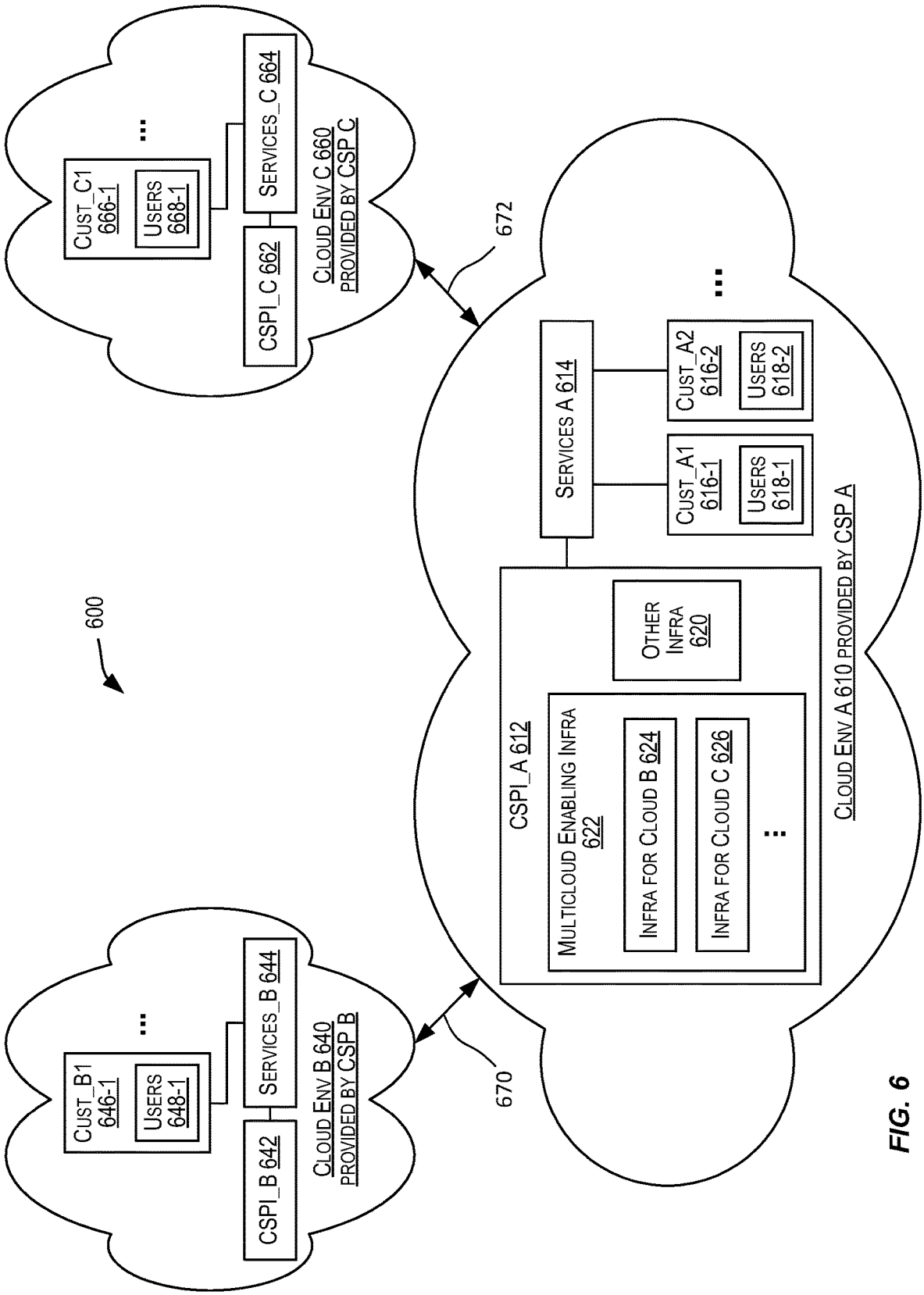
600
CUST_C1 666-1
USERS 668-1
SERVICES_C 664
CSPI_C 662
CLOUD ENV C 660 PROVIDED BY CSP C
672
SERVICES A 614
CUST_A2 616-2
USERS 618-2
CUST_A1 616-1
USERS 618-1
CSPI_A 612
MULTICLOUD ENABLING INFRA 622
INFRA FOR CLOUD B 624
INFRA FOR CLOUD C 626
OTHER INFRA 620
CLOUD ENV A 610 PROVIDED BY CSP A
670
CUST_B1 646-1
USERS 648-1
SERVICES_B 644
CSPI_B 642
CLOUD ENV B 640 PROVIDED BY CSP B

FIG. 6

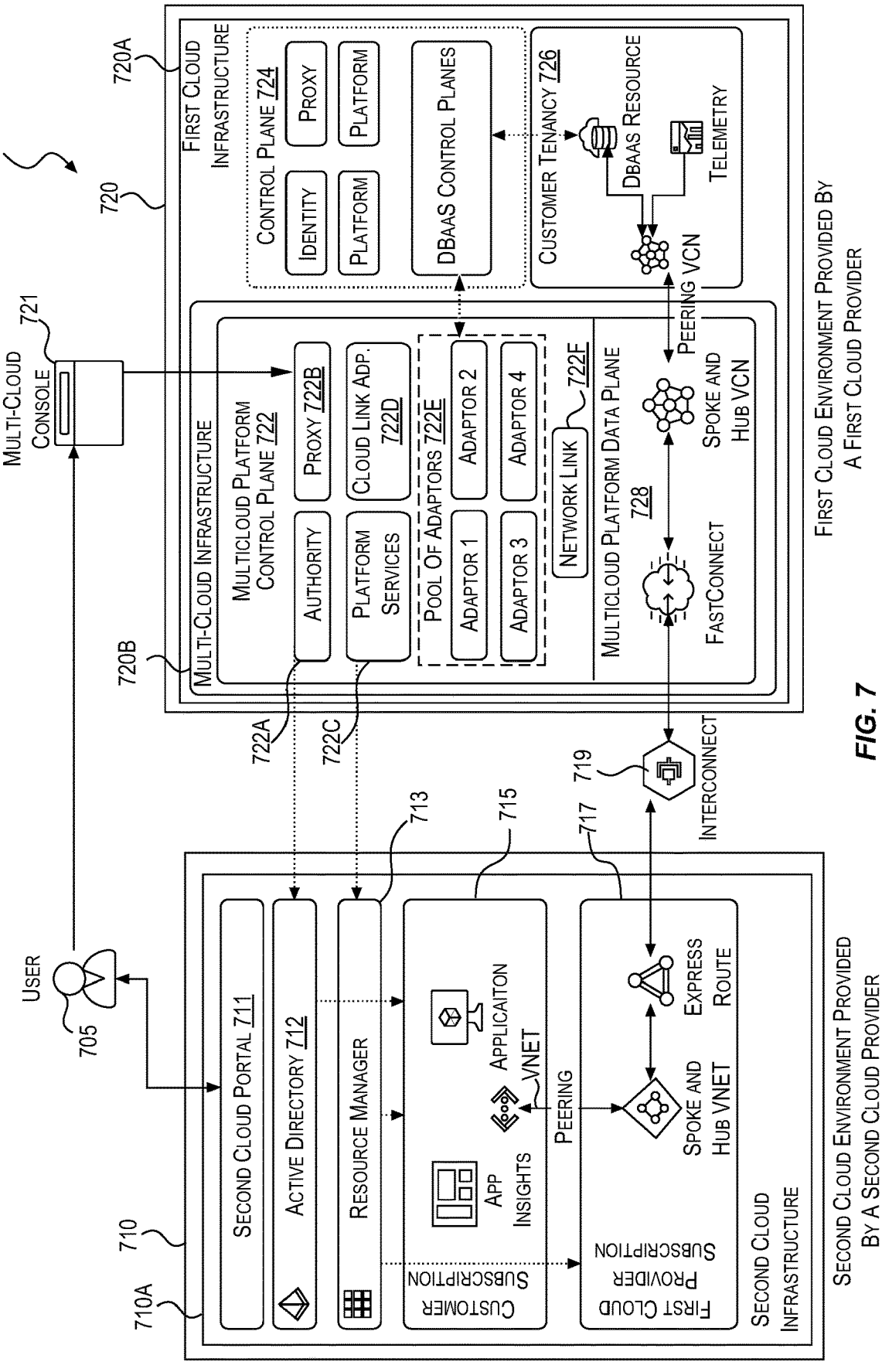
700
720A
720
FIRST CLOUD INFRASTRUCTURE
CONTROL PLANE 724
PROXY
PLATFORM
IDENTITY
PLATFORM
DBAAS CONTROL PLANES
CUSTOMER TENANCY 726
DBAAS RESOURCE
TELEMETRY
PEERING VCN
MULTI-CLOUD CONSOLE 721
MULTI-CLOUD INFRASTRUCTURE
MULTICLOUD PLATFORM CONTROL PLANE 722
AUTHORITY
PROXY 722B
PLATFORM SERVICES
CLOUD LINK ADP. 722D
POOL OF ADAPTORS 722E
ADAPTOR 1
ADAPTOR 2
ADAPTOR 3
ADAPTOR 4
NETWORK LINK 722F
MULTICLOUD PLATFORM DATA PLANE 728
FASTCONNECT
SPOKE AND HUB VCN
720B
FIRST CLOUD ENVIRONMENT PROVIDED BY A FIRST CLOUD PROVIDER
722A
722C
719
INTERCONNECT
713
715
717
USER
705
710
710A
SECOND CLOUD PORTAL 711
ACTIVE DIRECTORY 712
RESOURCE MANAGER
CUSTOMER SUBSCRIPTION
APPLICAITON VNET
APP INSIGHTS
PEERING
FIRST CLOUD PROVIDER SUBSCRIPTION
SPOKE AND HUB VNET
EXPRESS ROUTE
SECOND CLOUD INFRASTRUCTURE
SECOND CLOUD ENVIRONMENT PROVIDED BY A SECOND CLOUD PROVIDER

FIG. 7

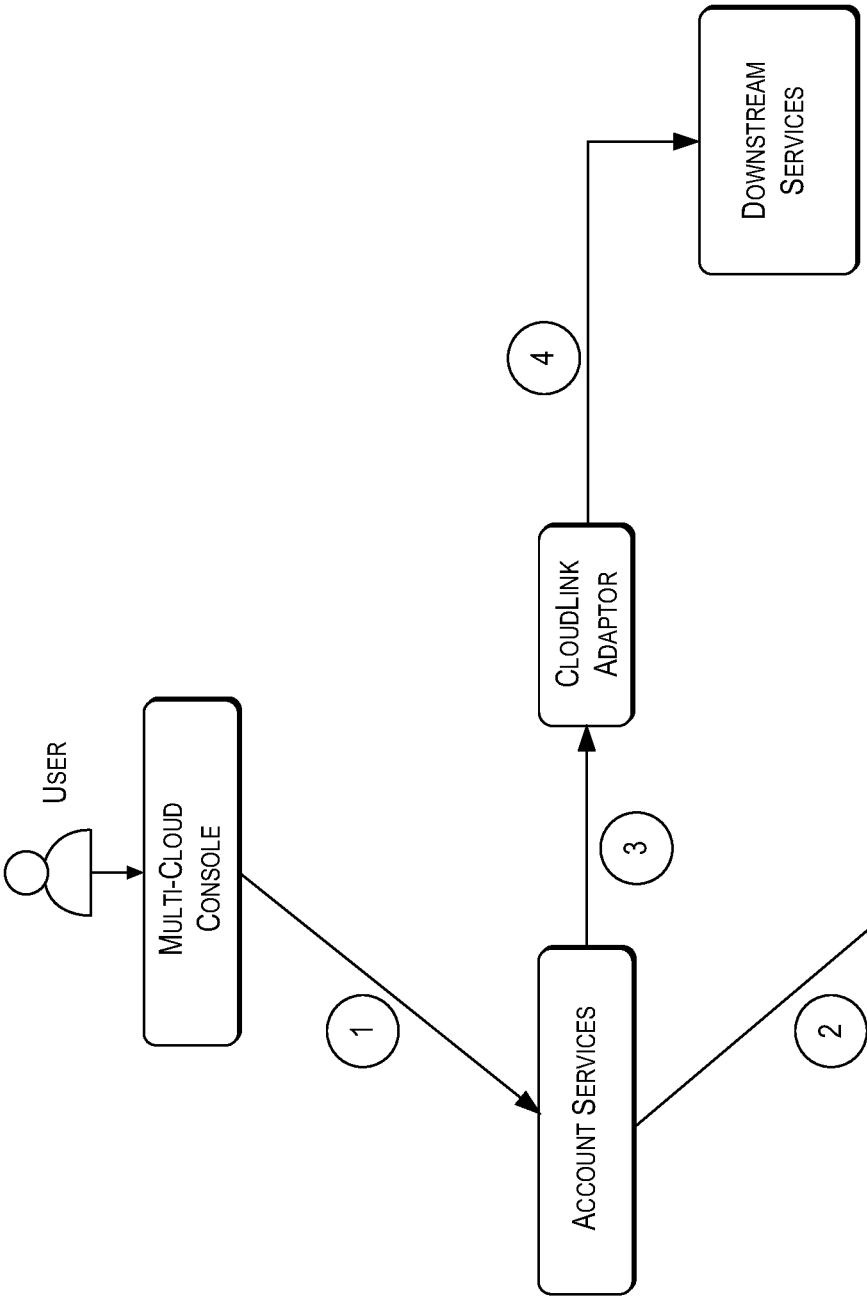
USER
MULTI-CLOUD CONSOLE
1
ACCOUNT SERVICES
2
MCCP AUTHORITY/PROXY
3
CLOUDLINK ADAPTOR
4
DOWNSTREAM SERVICES

FIG. 8A

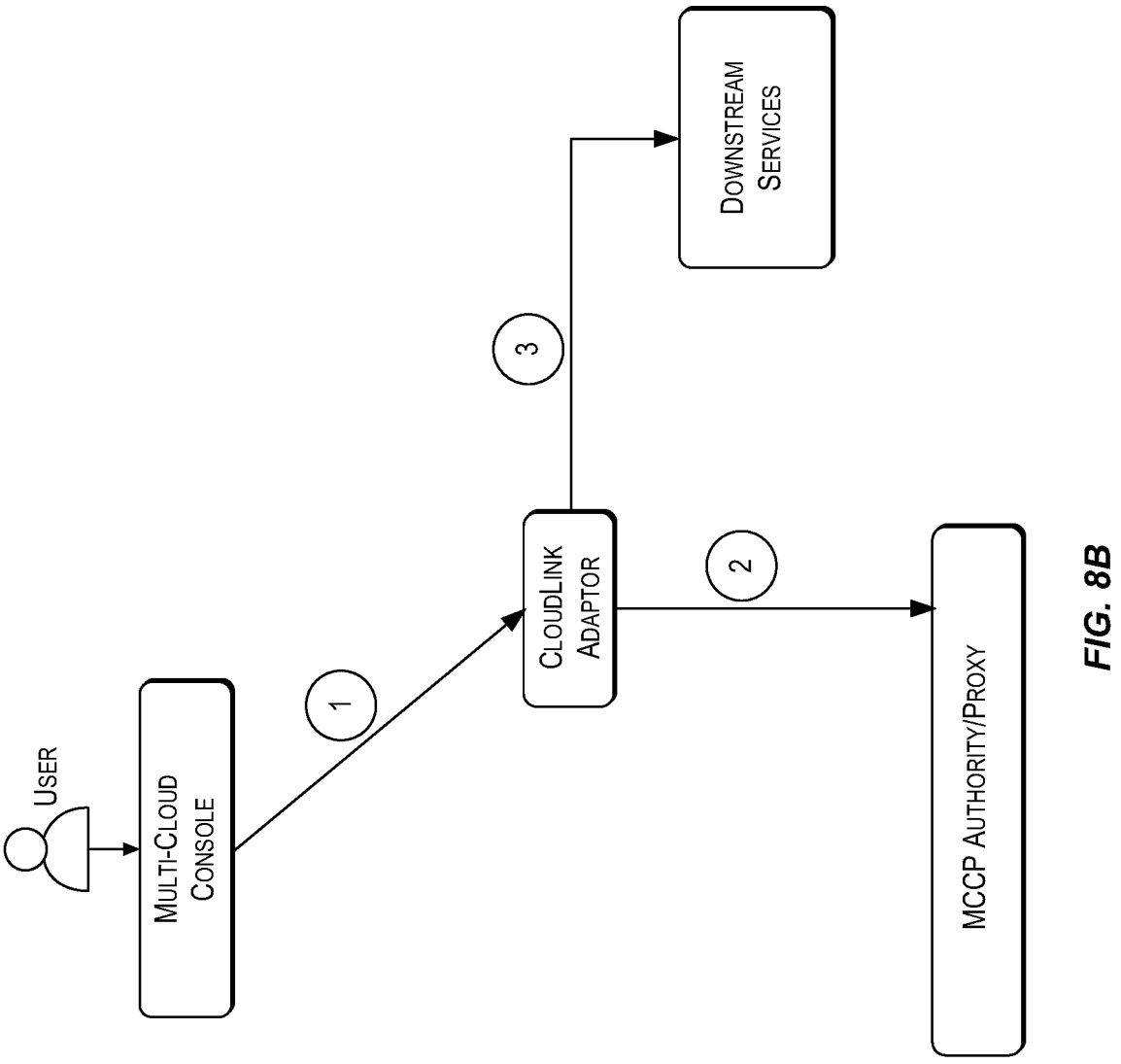
USER
MULTI-CLOUD CONSOLE
1
CLOUDLINK ADAPTOR
2
MCCP AUTHORITY/PROXY
3
DOWNSTREAM SERVICES

FIG. 8B

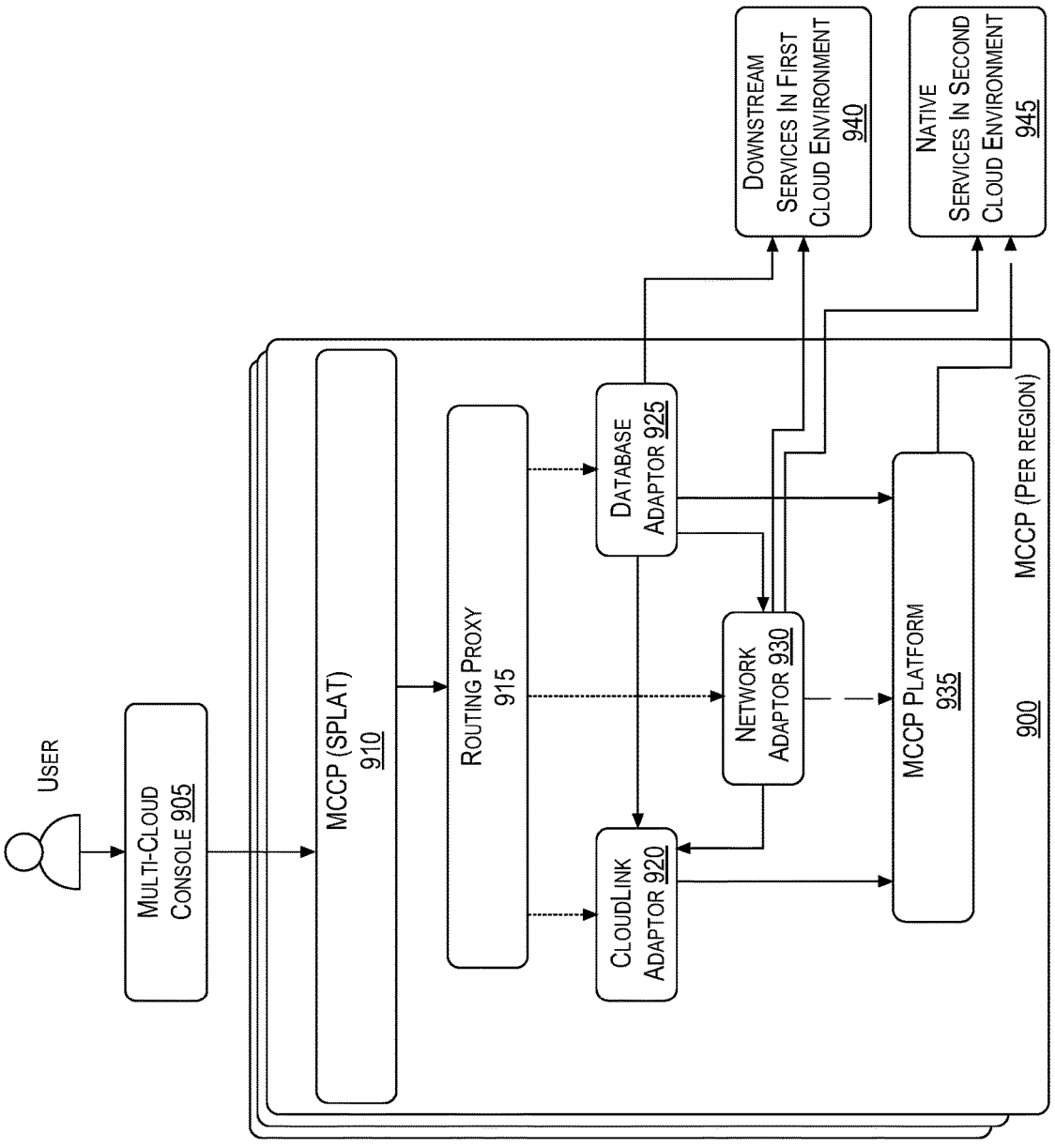
USER
MULTI-CLOUD CONSOLE 905
MCCP (SPLAT) 910
ROUTING PROXY 915
DATABASE ADAPTOR 925
NETWORK ADAPTOR 930
CLOUDLINK ADAPTOR 920
MCCP PLATFORM 935
900
MCCP (PER REGION)
DOWNSTREAM SERVICES IN FIRST CLOUD ENVIRONMENT 940
NATIVE SERVICES IN SECOND CLOUD ENVIRONMENT 945

FIG. 9

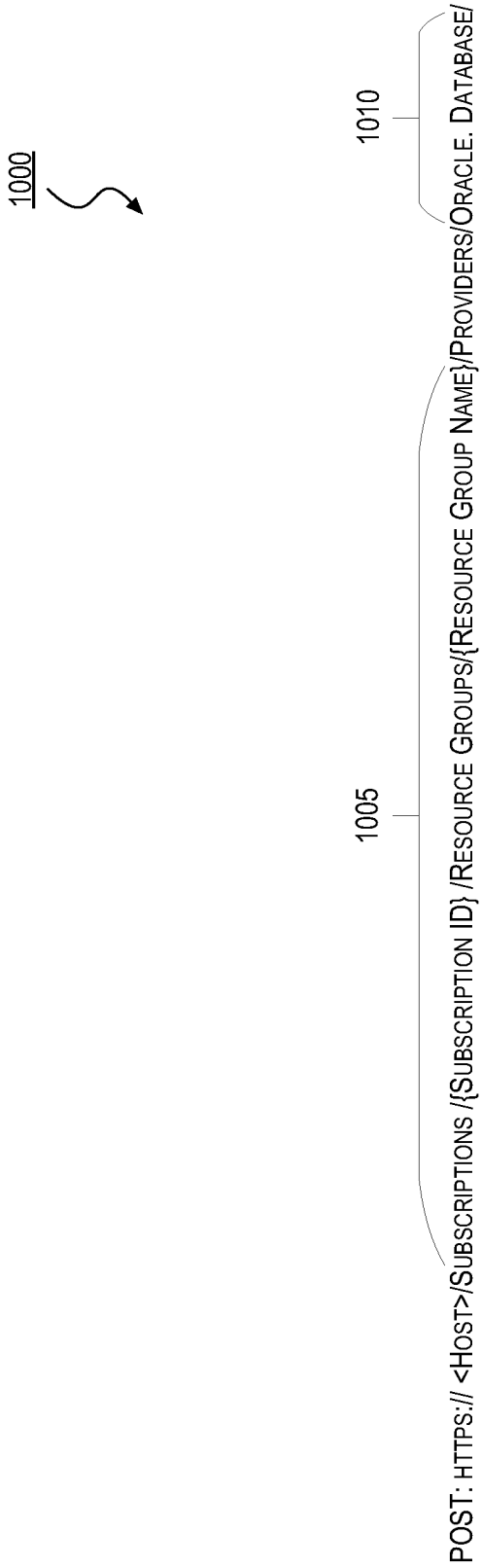
1000
1005
1010
1015
POST: HTTPS:// <HOST>/SUBSCRIPTIONS /{SUBSCRIPTION ID} /RESOURCE GROUPS/{RESOURCE GROUP NAME}/PROVIDERS/ORACLE. DATABASE/
EXADATA INFRASTRUCTURE/{NAME} / VERSION = 2121-03-01

FIG. 10

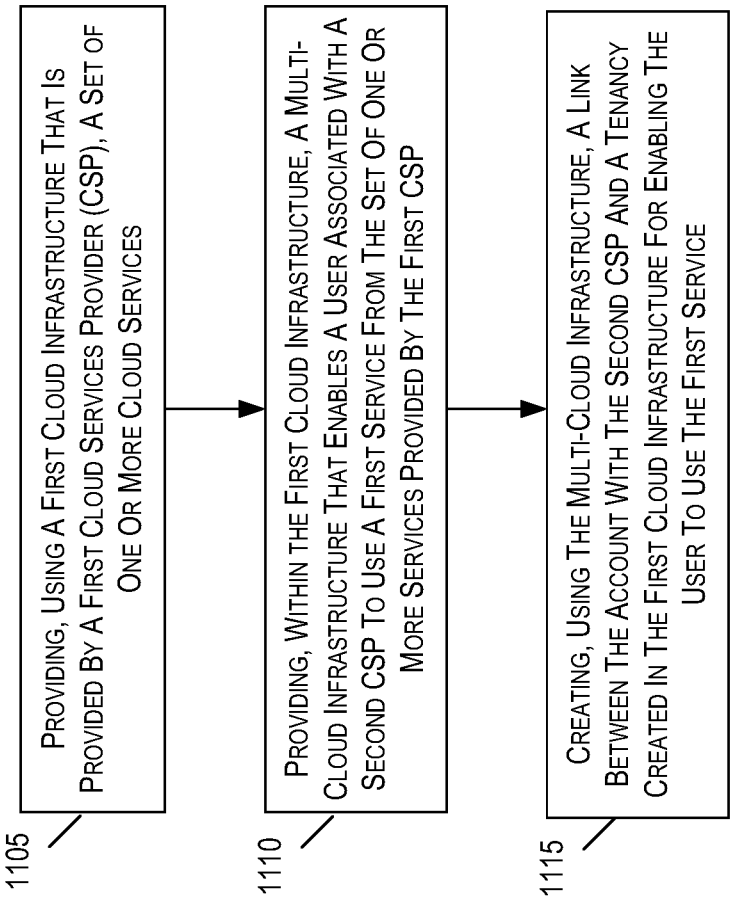
1105
PROVIDING, USING A FIRST CLOUD INFRASTRUCTURE THAT IS PROVIDED BY A FIRST CLOUD SERVICES PROVIDER (CSP), A SET OF ONE OR MORE CLOUD SERVICES
1110
PROVIDING, WITHIN THE FIRST CLOUD INFRASTRUCTURE, A MULTI-CLOUD INFRASTRUCTURE THAT ENABLES A USER ASSOCIATED WITH A SECOND CSP TO USE A FIRST SERVICE FROM THE SET OF ONE OR MORE SERVICES PROVIDED BY THE FIRST CSP
1115
CREATING, USING THE MULTI-CLOUD INFRASTRUCTURE, A LINK BETWEEN THE ACCOUNT WITH THE SECOND CSP AND A TENANCY CREATED IN THE FIRST CLOUD INFRASTRUCTURE FOR ENABLING THE USER TO USE THE FIRST SERVICE

FIG. 11

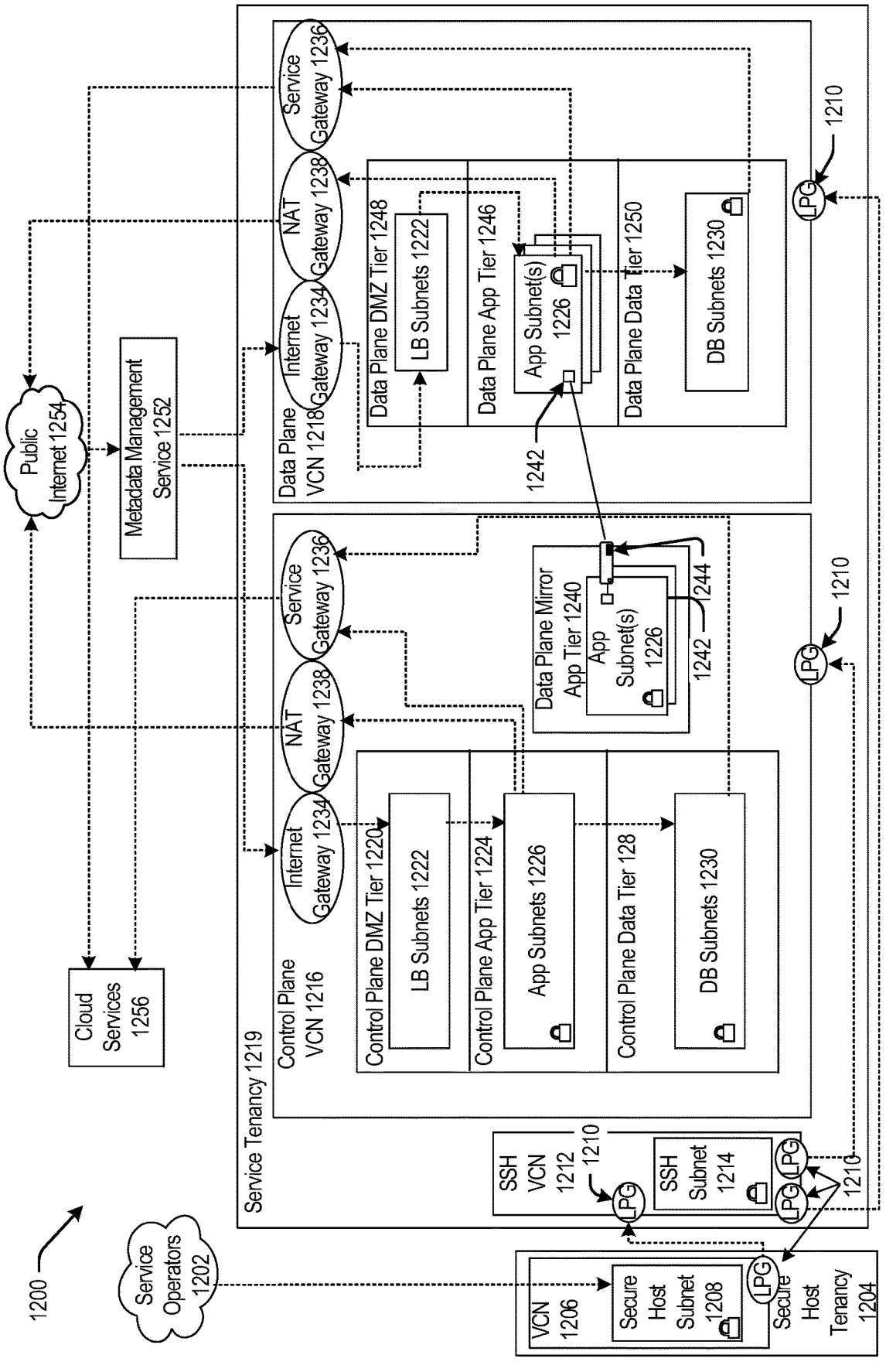
1200
Service Operators 1202
Public Internet 1254
Metadata Management Service 1252
Cloud Services 1256
Service Tenancy 1219
Control Plane VCN 1216
Control Plane DMZ Tier 1220
LB Subnets 1222
Control Plane App Tier 1224
App Subnets 1226
Control Plane Data Tier 128
DB Subnets 1230
Internet Gateway 1234
NAT Gateway 1238
Service Gateway 1236
Data Plane VCN 1218
Data Plane DMZ Tier 1248
Data Plane App Tier 1246
Data Plane Data Tier 1250
Data Plane Mirror App Tier 1240
App Subnet(s) 1226
1242
1244
1210
LPG
SSH VCN 1212
SSH Subnet 1214
VCN 1206
Secure Host Subnet 1208
Secure Host Tenancy 1204

FIG. 12

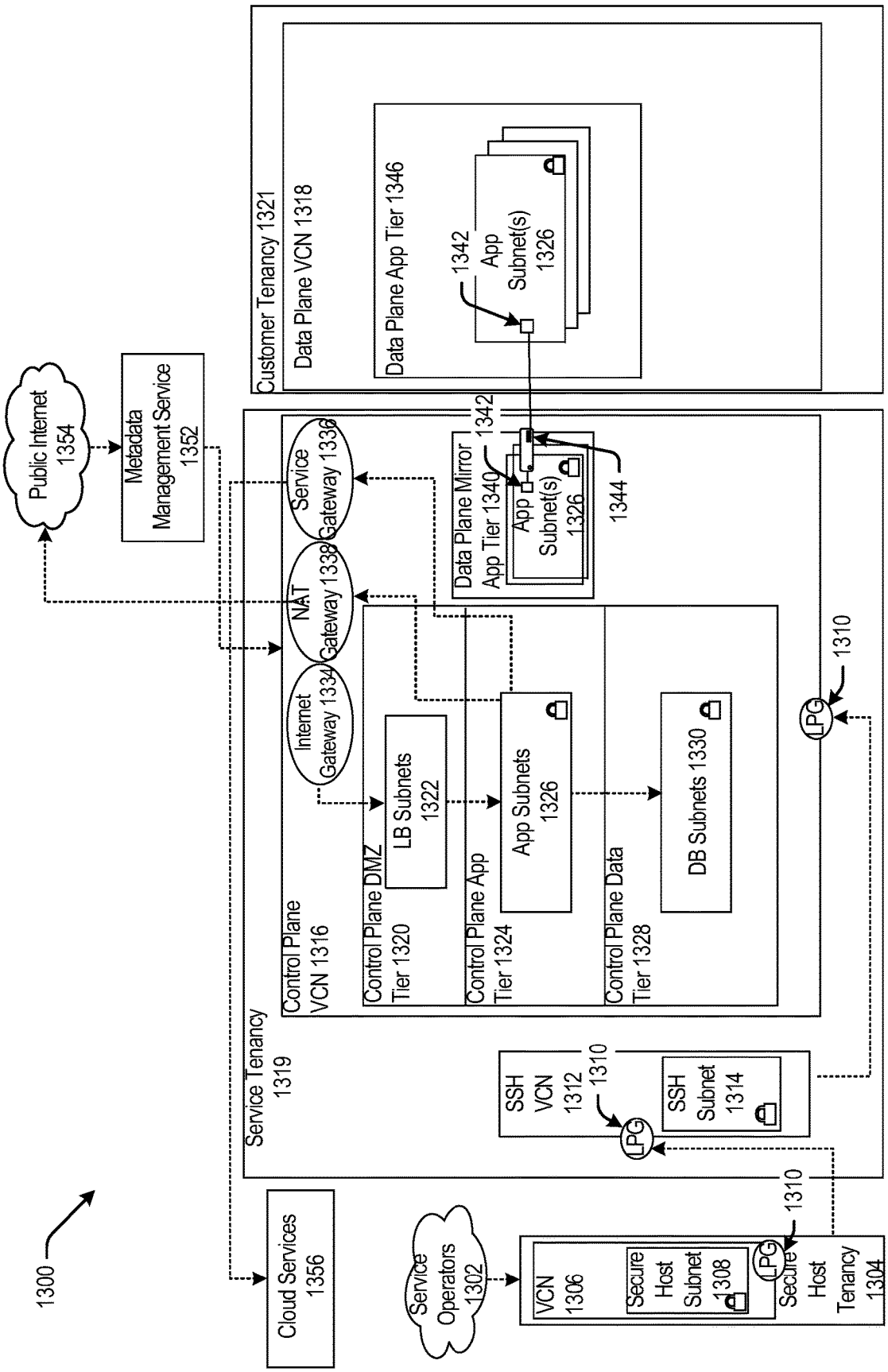
1300
Public Internet 1354
Metadata Management Service 1352
Customer Tenancy 1321
Data Plane VCN 1318
Data Plane App Tier 1346
1342
App Subnet(s) 1326
Service Gateway 1336
NAT Gateway 1338
Internet Gateway 1334
Data Plane Mirror App Tier 1340
1342
App Subnet(s) 1326
1344
Service Tenancy 1319
Control Plane VCN 1316
Control Plane DMZ Tier 1320
LB Subnets 1322
Control Plane App Tier 1324
App Subnets 1326
Control Plane Data Tier 1328
DB Subnets 1330
LPG
1310
SSH VCN 1312
1310
SSH Subnet 1314
LPG
1310
Cloud Services 1356
Service Operators 1302
VCN 1306
Secure Host Subnet 1308
LPG
Secure Host Tenancy 1304

FIG. 13

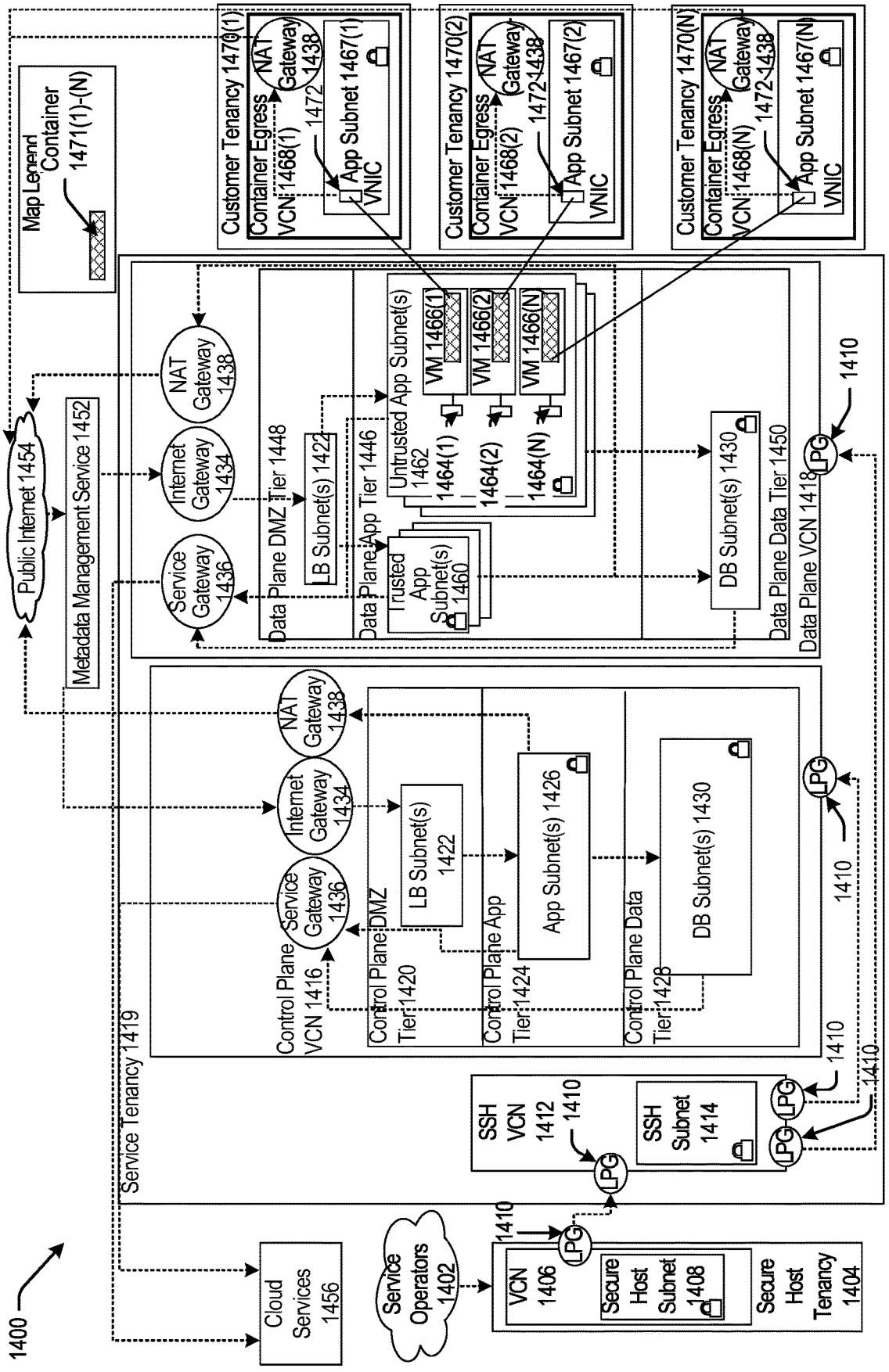
1400
Service Operators 1402
Cloud Services 1456
Secure Host Tenancy 1404
Secure Host Subnet 1408
VCN 1406
1410
LPG
SSH VCN 1412
SSH Subnet 1414
Service Tenancy 1419
Control Plane VCN 1416
Control Plane DMZ Tier 1420
LB Subnet(s) 1422
Control Plane App Tier 1424
App Subnet(s) 1426
Control Plane Data Tier 1428
DB Subnet(s) 1430
Service Gateway 1436
Internet Gateway 1434
NAT Gateway 1438
Public Internet 1454
Metadata Management Service 1452
Data Plane DMZ Tier 1448
Data Plane App Tier 1446
Untrusted App Subnet(s) 1462
Trusted App Subnet(s) 1460
VM 1466(1)
VM 1466(2)
VM 1466(N)
1464(1)
1464(2)
1464(N)
Data Plane Data Tier 1450
Data Plane VCN 1418
Map Legend
Container 1471(1)-(N)
Customer Tenancy 1470(1)
Container Egress VCN 1468(1)
1472
App Subnet 1467(1) VNIC
Customer Tenancy 1470(2)
Container Egress VCN 1468(2)
App Subnet 1467(2) VNIC
Customer Tenancy 1470(N)
Container Egress VCN 1468(N)
App Subnet 1467(N) VNIC

FIG. 14

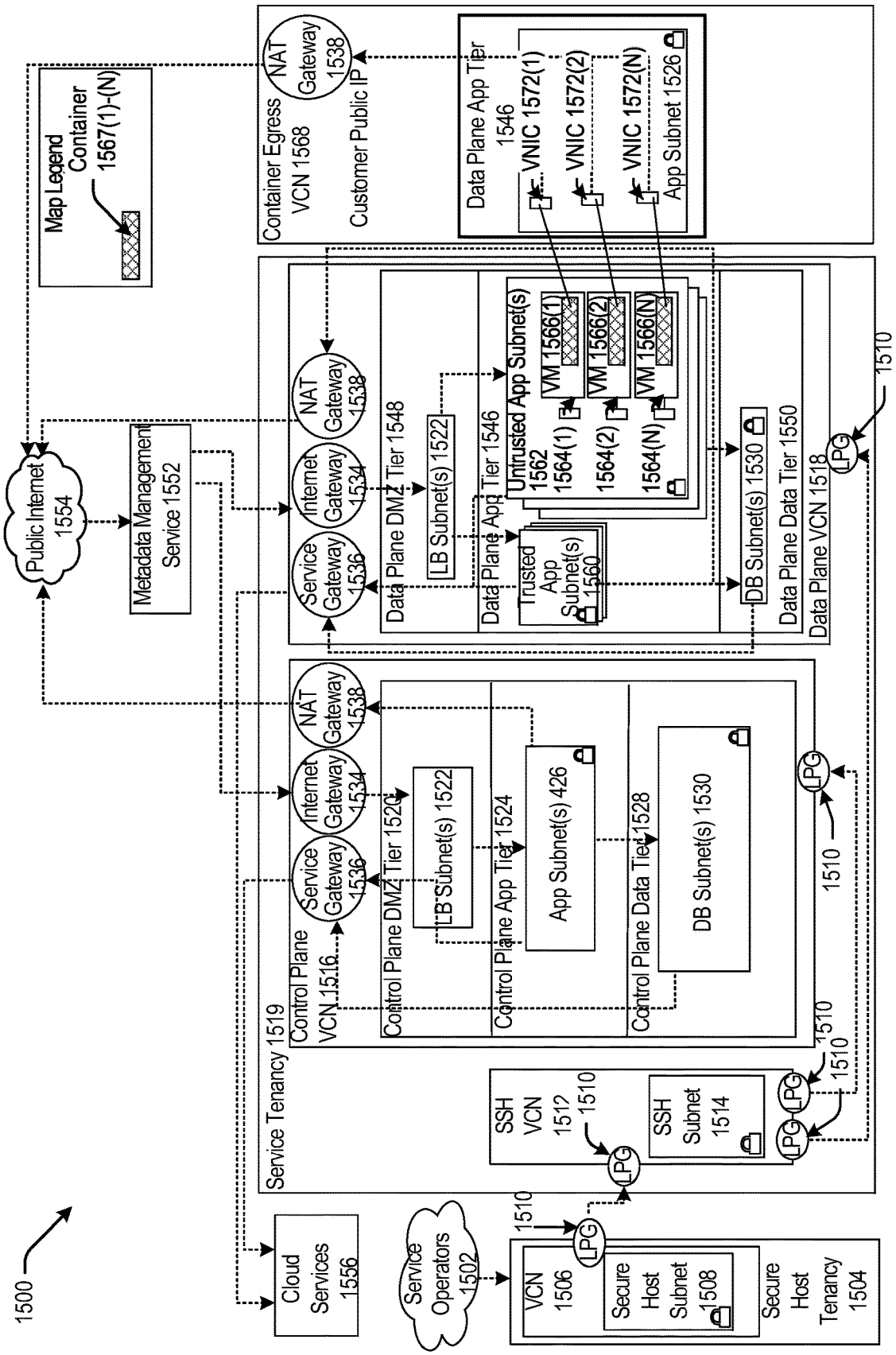
1500
Map Legend
Container
1567(1)-(N)
Container Egress
VCN 1568
NAT
Gateway
1538
Customer Public IP
Data Plane App Tier
1546
VNIC 1572(1)
VNIC 1572(2)
VNIC 1572(N)
App Subnet 1526
Public Internet
1554
Metadata Management
Service 1552
Service
Gateway
1536
Internet
Gateway
1534
NAT
Gateway
1538
Data Plane DMZ Tier 1548
LB Subnet(s) 1522
Data Plane App Tier 1546
Untrusted App Subnet(s)
1562
1564(1)
1564(2)
1564(N)
VM 1566(1)
VM 1566(2)
VM 1566(N)
Trusted
App
Subnet(s)
1560
DB Subnet(s) 1530
Data Plane Data Tier 1550
Data Plane VCN 1518
LPG
1510
Service Tenancy 1519
Control Plane
VCN 1516
Control Plane DMZ Tier 1520
LB Subnet(s) 1522
Control Plane App Tier 1524
App Subnet(s) 426
Control Plane Data Tier 1528
DB Subnet(s) 1530
SSH
VCN
1512
SSH
Subnet
1514
Cloud
Services
1556
Service
Operators
1502
VCN
1506
Secure
Host
Subnet
1508
Secure
Host
Tenancy
1504

FIG. 15

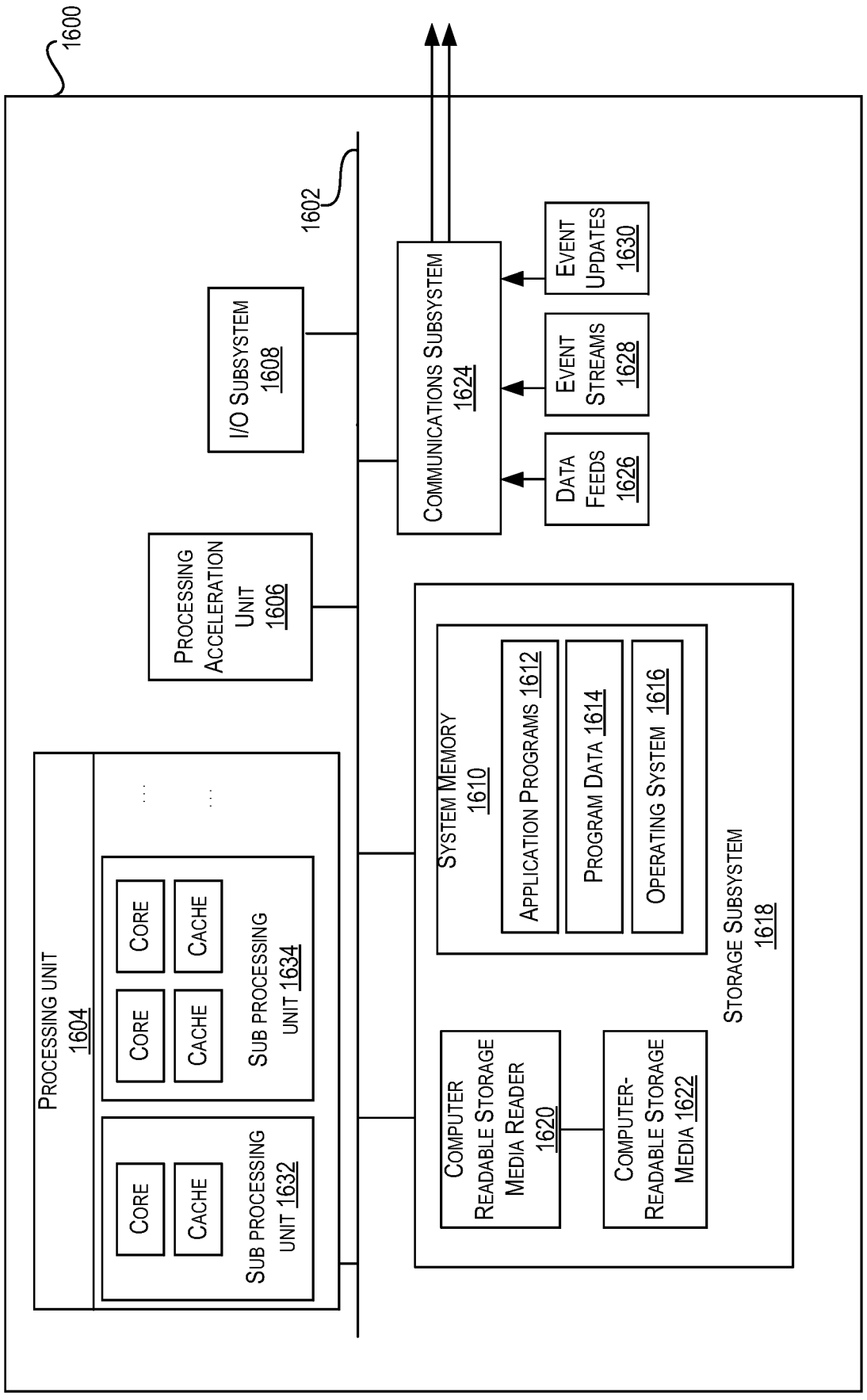
1600
1602
I/O SUBSYSTEM 1608
COMMUNICATIONS SUBSYSTEM 1624
EVENT UPDATES 1630
EVENT STREAMS 1628
DATA FEEDS 1626
PROCESSING ACCELERATION UNIT 1606
PROCESSING UNIT 1604
CORE
CACHE
SUB PROCESSING UNIT 1632
CORE
CACHE
SUB PROCESSING UNIT 1634
SYSTEM MEMORY 1610
APPLICATION PROGRAMS 1612
PROGRAM DATA 1614
OPERATING SYSTEM 1616
COMPUTER READABLE STORAGE MEDIA READER 1620
COMPUTER-READABLE STORAGE MEDIA 1622
STORAGE SUBSYSTEM 1618

FIG. 16

MULTI-CLOUD CONTROL PLANE ARCHITECTURE

CROSS-REFERENCES TO RELATED APPLICATIONS

[0001] The present application is a non-provisional of and claims the benefit of each of the following provisional applications. The entire contents of each of the provisional applications listed below are incorporated herein by reference for all purposes.

[0002] (1) U.S. Provisional Application No. 63/306,007, filed on Feb. 2, 2022;

[0003] (2) U.S. Provisional Application No. 63/306,918, filed on Feb. 4, 2022;

[0004] (3) U.S. Provisional Application No. 63/321,614, filed on Mar. 18, 2022;

[0005] (4) U.S. Provisional Application No. 63/333,965, filed on Apr. 22, 2022;

[0006] (5) U.S. Provisional Application No. 63/336,811, filed on Apr. 29, 2022;

[0007] (6) U.S. Provisional Application No. 63/339,297, filed on May 6, 2022;

[0008] (7) U.S. Provisional Application No. 63/357,541, filed on Jun. 30, 2022; and

[0009] (8) U.S. Provisional Application No. 63/388,925, filed on Jul. 13, 2022.

FIELD

[0010] The present disclosure relates to cloud architectures, and more particularly to techniques for linking two cloud environments such that a user of one cloud environment can use a service provided by the other cloud environment.

BACKGROUND

[0011] The last few years have seen a dramatic increase in the adoption of cloud services and this trend is only going to increase. Various different cloud environments are being provided by different cloud service providers (CSPs), each cloud environment providing a set of one or more cloud services. The set of cloud services offered by a cloud environment may include one or more different types of services including but not restricted to Software-as-a-Service (SaaS) services, Infrastructure-as-a-Service (IaaS) services, Platform-as-a-Service (PaaS) services, and others.

[0012] While various different cloud environments are currently available, each cloud environment provides a closed ecosystem for its subscribing customers. As a result, a customer of a cloud environment is restricted to using the services offered by that cloud environment. There is no easy way for a customer subscribing to a cloud environment provided by a CSP to, via that cloud environment, use a service offered in a different cloud environment provided by a different CSP. Embodiments discussed herein address these and other issues.

SUMMARY

[0013] The present disclosure relates generally to improved cloud architectures, and more particularly to techniques for linking two clouds such that a user of one cloud environment can use a service provided by another different cloud environment. Various embodiments are described herein, including methods, systems, non-transitory computer-readable storage media storing programs, code, or instructions executable by one or more processors, and the like. Some embodiments may be implemented by using a computer program product, comprising computer program/instructions which, when executed by a processor, cause the processor to perform any of the methods described in the disclosure.

[0014] Embodiments of the present disclosure provide for a multi-cloud control plane (MCCP) framework that provisions for capabilities to deliver services of a particular cloud network (e.g., Oracle Cloud Infrastructure (OCI)) to users on other clouds (e.g., in Microsoft Azure). The MCCP framework allows users (of other cloud environment(s)) to access services (e.g., PaaS services) of a cloud environment, while providing with a user experience as close as possible to that of the native cloud environment(s) of the user. A key value proposition to MCCP is that customers will be able to experience the full data plane capabilities of the services in external clouds.

[0015] One embodiment of the present disclosure is directed to a method comprising: providing, using a first cloud infrastructure provided by a first cloud services provider, a set of one or more cloud services; providing, within the first cloud infrastructure, a multi-cloud infrastructure that enables a user associated with an account with a second cloud services provider to use, from a second cloud infrastructure, a first service from the set of one or more cloud services; and creating, using the multi-cloud infrastructure, a link between the account with the second cloud service provider and a tenancy created in the first cloud infrastructure for enabling using the first service by the user.

[0016] An aspect of the present disclosure provides for a computing device comprising one or more data processors, and a non-transitory computer readable storage medium containing instructions which, when executed on the one or more data processors, cause the computing device to perform part or all of one or more methods disclosed herein.

[0017] Another aspect of the present disclosure provides for a computer-program product tangibly embodied in a non-transitory machine-readable storage medium, including instructions configured to cause one or more data processors to perform part or all of one or more methods disclosed herein.

[0018] The foregoing, together with other features and embodiments will become more apparent upon referring to the following specification, claims, and accompanying drawings.

BRIEF DESCRIPTION OF THE DRAWINGS

[0019] Features, embodiments, and advantages of the present disclosure are better understood when the following Detailed Description is read with reference to the accompanying drawings.

[0020] FIG. **1** is a high-level diagram of a distributed environment showing a virtual or overlay cloud network hosted by a cloud service provider infrastructure according to certain embodiments.

[0021] FIG. **2** depicts a simplified architectural diagram of the physical components in the physical network within CSPI according to certain embodiments.

[0022] FIG. **3** shows an example arrangement within CSPI where a host machine is connected to multiple network virtualization devices (NVDs) according to certain embodiments.

[0023] FIG. **4** depicts connectivity between a host machine and an NVD for providing I/O virtualization for supporting multitenancy according to certain embodiments.

[0024] FIG. **5** depicts a simplified block diagram of a physical network provided by a CSPI according to certain embodiments.

[0025] FIG. **6** depicts a simplified high-level diagram of a distributed environment comprising multiple cloud environments provided by different cloud service providers (CSPs) wherein the cloud environments include a particular cloud environment that provides specialized infrastructure that enables one or more cloud services provided by that particular cloud environment to be used by customers of other cloud environments according to certain embodiments.

[0026] FIG. **7** depicts an exemplary high-level architecture of a multi-cloud control plane (MCCP), according to some embodiments.

[0027] FIGS. **8**A and **8**B depict exemplary processes for linking two user accounts in different cloud environments, according to some embodiments.

[0028] FIG. **9** depicts an exemplary system diagram illustrating components of a multi-cloud control plane (MCCP) according to some embodiments.

[0029] FIG. **10** depicts an exemplary request received by a multi-cloud infrastructure, according to some embodiments.

[0030] FIG. **11** illustrates an exemplary flowchart depicting steps performed by a multi-cloud infrastructure, according to certain embodiments.

[0031] FIG. **12** is a block diagram illustrating one pattern for implementing a cloud infrastructure as a service system, according to at least one embodiment.

[0032] FIG. **13** is a block diagram illustrating another pattern for implementing a cloud infrastructure as a service system, according to at least one embodiment.

[0033] FIG. **14** is a block diagram illustrating another pattern for implementing a cloud infrastructure as a service system, according to at least one embodiment.

[0034] FIG. **15** is a block diagram illustrating another pattern for implementing a cloud infrastructure as a service system, according to at least one embodiment.

[0035] FIG. **16** is a block diagram illustrating an example computer system, according to at least one embodiment.

DETAILED DESCRIPTION

[0036] In the following description, for the purposes of explanation, specific details are set forth in order to provide a thorough understanding of certain embodiments. However, it will be apparent that various embodiments may be practiced without these specific details. The figures and description are not intended to be restrictive. The word "exemplary" is used herein to mean "serving as an example, instance, or illustration." Any embodiment or design described herein as "exemplary" is not necessarily to be construed as preferred or advantageous over other embodiments or designs.

[0037] The present disclosure relates generally to improved cloud architectures, and more particularly to techniques for linking two clouds such that a user of one cloud environment can use a service provided by another different cloud environment. Various embodiments are described herein, including methods, systems, non-transitory computer-readable storage media storing programs, code, or instructions executable by one or more processors, and the like. Some embodiments may be implemented by using a computer program product, comprising computer program/instructions which, when executed by a processor, cause the processor to perform any of the methods described in the disclosure.

[0038] Embodiments of the present disclosure provide for a multi-cloud control plane (MCCP) framework that provisions for capabilities to deliver services of a particular cloud network (e.g., Oracle Cloud Infrastructure (OCI)) to users on other clouds (e.g., in Microsoft Azure). The MCCP framework allows users (of other cloud environment(s)) to access services (e.g., PaaS services) of a cloud environment, while providing with a user experience as close as possible to that of the native cloud environment(s) of the user. A key value proposition to MCCP is that customers will be able to experience the full data plane capabilities of the services in external clouds.

[0039] The MCCP enables users of a second cloud infrastructure (e.g., Azure users) to make use of resources (e.g., database resources) provided by a first cloud infrastructure (e.g., OCI) in a way that is transparent to the user. Specifically, the services provided by the first cloud infrastructure appear as "native" services in the second cloud infrastructure. This allows customers of the second cloud infrastructure to natively access services provided by the first cloud infrastructure. As will be described below with reference to FIGS. **6-11**, the MCCP is a collection of microservices executed in the first cloud infrastructure, which exposes resources of the first cloud infrastructure to be utilized by external cloud users (e.g., users of the second cloud infrastructure). Each of the microservices acts as a proxy providing communication to resources provided by the first cloud infrastructure.

Examples of Cloud Networks

[0040] The term cloud service is generally used to refer to a service that is made available by a cloud services provider (CSP) to users or customers on demand (e.g., via a subscription model) using systems and infrastructure (cloud infrastructure) provided by the CSP. Typically, the servers and systems that make up the CSP's infrastructure are separate from the customer's own on-premises servers and systems. Customers can thus avail themselves of cloud services provided by the CSP without having to purchase separate hardware and software resources for the services. Cloud services are designed to provide a subscribing customer easy, scalable access to applications and computing resources without the customer having to invest in procuring the infrastructure that is used for providing the services.

[0041] There are several cloud service providers that offer various types of cloud services. There are various different types or models of cloud services including Software-as-a-Service (SaaS), Platform-as-a-Service (PaaS), Infrastructure-as-a-Service (IaaS), and others.

[0042] A customer can subscribe to one or more cloud services provided by a CSP. The customer can be any entity such as an individual, an organization, an enterprise, and the like. When a customer subscribes to or registers for a service provided by a CSP, a tenancy or an account is created for that customer. The customer can then, via this account, access the subscribed-to one or more cloud resources associated with the account.

[0043] As noted above, infrastructure as a service (IaaS) is one particular type of cloud computing service. In an IaaS model, the CSP provides infrastructure (referred to as cloud

services provider infrastructure or CSPI) that can be used by customers to build their own customizable networks and deploy customer resources. The customer's resources and networks are thus hosted in a distributed environment by infrastructure provided by a CSP. This is different from traditional computing, where the customer's resources and networks are hosted by infrastructure provided by the customer.

[0044] The CSPI may comprise interconnected high-performance compute resources including various host machines, memory resources, and network resources that form a physical network, which is also referred to as a substrate network or an underlay network. The resources in CSPI may be spread across one or more data centers that may be geographically spread across one or more geographical regions. Virtualization software may be executed by these physical resources to provide a virtualized distributed environment. The virtualization creates an overlay network (also known as a software-based network, a software-defined network, or a virtual network) over the physical network. The CSPI physical network provides the underlying basis for creating one or more overlay or virtual networks on top of the physical network. The physical network (or substrate network or underlay network) comprises physical network devices such as physical switches, routers, computers and host machines, and the like. An overlay network is a logical (or virtual) network that runs on top of a physical substrate network. A given physical network can support one or multiple overlay networks. Overlay networks typically use encapsulation techniques to differentiate between traffic belonging to different overlay networks. A virtual or overlay network is also referred to as a virtual cloud network (VCN). The virtual networks are implemented using software virtualization technologies (e.g., hypervisors, virtualization functions implemented by network virtualization devices (NVDs) (e.g., smartNICs), top-of-rack (TOR) switches, smart TORs that implement one or more functions performed by an NVD, and other mechanisms) to create layers of network abstraction that can be run on top of the physical network. Virtual networks can take on many forms, including peer-to-peer networks, IP networks, and others. Virtual networks are typically either Layer-3 IP networks or Layer-2 VLANs. This method of virtual or overlay networking is often referred to as virtual or overlay Layer-3 networking. Examples of protocols developed for virtual networks include IP-in-IP (or Generic Routing Encapsulation (GRE)) Virtual Extensible LAN (VXLAN—IETF RFC 7348), Virtual Private Networks (VPNs) (e.g., MPLS Layer-3 Virtual Private Networks (RFC 4364)), VMware's NSX, GENEVE (Generic Network Virtualization Encapsulation), and others.

[0045] For IaaS, the infrastructure (CSPI) provided by a CSP can be configured to provide virtualized computing resources over a public network (e.g., the Internet). In an IaaS model, a cloud computing services provider can host the infrastructure components (e.g., servers, storage devices, network nodes (e.g., hardware), deployment software, platform virtualization (e.g., a hypervisor layer), or the like). In some cases, an IaaS provider may also supply a variety of services to accompany those infrastructure components (e.g., billing, monitoring, logging, security, load balancing and clustering, etc.). Thus, as these services may be policy-driven, IaaS users may be able to implement policies to drive load balancing to maintain application availability and performance. CSPI provides infrastructure and a set of complementary cloud services that enable customers to build and run a wide range of applications and services in a highly available hosted distributed environment. CSPI offers high-performance compute resources and capabilities and storage capacity in a flexible virtual network that is securely accessible from various networked locations such as from a customer's on-premises network. When a customer subscribes to or registers for an IaaS service provided by a CSP, the tenancy created for that customer is a secure and isolated partition within the CSPI where the customer can create, organize, and administer their cloud resources.

[0046] Customers can build their own virtual networks using compute, memory, and networking resources provided by CSPI. One or more customer resources or workloads, such as compute instances, can be deployed on these virtual networks. For example, a customer can use resources provided by CSPI to build one or multiple customizable and private virtual network(s) referred to as virtual cloud networks (VCNs). A customer can deploy one or more customer resources, such as compute instances, on a customer VCN. Compute instances can take the form of virtual machines, bare metal instances, and the like. The CSPI thus provides infrastructure and a set of complementary cloud services that enable customers to build and run a wide range of applications and services in a highly available virtual hosted environment. The customer does not manage or control the underlying physical resources provided by CSPI but has control over operating systems, storage, and deployed applications; and possibly limited control of select networking components (e.g., firewalls).

[0047] The CSP may provide a console that enables customers and network administrators to configure, access, and manage resources deployed in the cloud using CSPI resources. In certain embodiments, the console provides a web-based user interface that can be used to access and manage CSPI. In some implementations, the console is a web-based application provided by the CSP.

[0048] CSPI may support single-tenancy or multi-tenancy architectures. In a single tenancy architecture, a software (e.g., an application, a database) or a hardware component (e.g., a host machine or a server) serves a single customer or tenant. In a multi-tenancy architecture, a software or a hardware component serves multiple customers or tenants. Thus, in a multi-tenancy architecture, CSPI resources are shared between multiple customers or tenants. In a multi-tenancy situation, precautions are taken, and safeguards put in place within CSPI to ensure that each tenant's data is isolated and remains invisible to other tenants.

[0049] In a physical network, a network endpoint ("endpoint") refers to a computing device or system that is connected to a physical network and communicates back and forth with the network to which it is connected. A network endpoint in the physical network may be connected to a Local Area Network (LAN), a Wide Area Network (WAN), or other type of physical network. Examples of traditional endpoints in a physical network include modems, hubs, bridges, switches, routers, and other networking devices, physical computers (or host machines), and the like. Each physical device in the physical network has a fixed network address that can be used to communicate with the device. This fixed network address can be a Layer-2 address (e.g., a MAC address), a fixed Layer-3 address (e.g., an IP address), and the like. In a virtualized environment or in a

virtual network, the endpoints can include various virtual endpoints such as virtual machines that are hosted by components of the physical network (e.g., hosted by physical host machines). These endpoints in the virtual network are addressed by overlay addresses such as overlay Layer-2 addresses (e.g., overlay MAC addresses) and overlay Layer-3 addresses (e.g., overlay IP addresses). Network overlays enable flexibility by allowing network managers to move around the overlay addresses associated with network endpoints using software management (e.g., via software implementing a control plane for the virtual network). Accordingly, unlike in a physical network, in a virtual network, an overlay address (e.g., an overlay IP address) can be moved from one endpoint to another using network management software. Since the virtual network is built on top of a physical network, communications between components in the virtual network involves both the virtual network and the underlying physical network. In order to facilitate such communications, the components of CSPI are configured to learn and store mappings that map overlay addresses in the virtual network to actual physical addresses in the substrate network, and vice versa. These mappings are then used to facilitate the communications. Customer traffic is encapsulated to facilitate routing in the virtual network.

[0050] Accordingly, physical addresses (e.g., physical IP addresses) are associated with components in physical networks and overlay addresses (e.g., overlay IP addresses) are associated with entities in virtual or overlay networks. A physical IP address is an IP address associated with a physical device (e.g., a network device) in the substrate or physical network. For example, each NVD has an associated physical IP address. An overlay IP address is an overlay address associated with an entity in an overlay network, such as with a compute instance in a customer's virtual cloud network (VCN). Two different customers or tenants, each with their own private VCNs can potentially use the same overlay IP address in their VCNs without any knowledge of each other. Both the physical IP addresses and overlay IP addresses are types of real IP addresses. These are separate from virtual IP addresses. A virtual IP address is typically a single IP address that is represents or maps to multiple real IP addresses. A virtual IP address provides a 1-to-many mapping between the virtual IP address and multiple real IP addresses. For example, a load balancer may use a VIP to map to or represent multiple servers, each server having its own real IP address.

[0051] The cloud infrastructure or CSPI is physically hosted in one or more data centers in one or more regions around the world. The CSPI may include components in the physical or substrate network and virtualized components (e.g., virtual networks, compute instances, virtual machines, etc.) that are in a virtual network built on top of the physical network components. In certain embodiments, the CSPI is organized and hosted in realms, regions, and availability domains. A region is typically a localized geographic area that contains one or more data centers. Regions are generally independent of each other and can be separated by vast distances, for example, across countries or even continents. For example, a first region may be in Australia, another one in Japan, yet another one in India, and the like. CSPI resources are divided among regions such that each region has its own independent subset of CSPI resources. Each region may provide a set of core infrastructure services and resources, such as, compute resources (e.g., bare metal servers, virtual machine, containers and related infrastructure, etc.); storage resources (e.g., block volume storage, file storage, object storage, archive storage); networking resources (e.g., virtual cloud networks (VCNs), load balancing resources, connections to on-premise networks), database resources; edge networking resources (e.g., DNS); and access management and monitoring resources, and others. Each region generally has multiple paths connecting it to other regions in the realm.

[0052] Generally, an application is deployed in a region (i.e., deployed on infrastructure associated with that region) where it is most heavily used, because using nearby resources is faster than using distant resources. Applications can also be deployed in different regions for various reasons, such as redundancy to mitigate the risk of region-wide events such as large weather systems or earthquakes, to meet varying requirements for legal jurisdictions, tax domains, and other business or social criteria, and the like.

[0053] The data centers within a region can be further organized and subdivided into availability domains (ADs). An availability domain may correspond to one or more data centers located within a region. A region can be composed of one or more availability domains. In such a distributed environment, CSPI resources are either region-specific, such as a virtual cloud network (VCN), or availability domain-specific, such as a compute instance.

[0054] ADs within a region are isolated from each other, fault tolerant, and are configured such that they are very unlikely to fail simultaneously. This is achieved by the ADs not sharing critical infrastructure resources such as networking, physical cables, cable paths, cable entry points, etc., such that a failure at one AD within a region is unlikely to impact the availability of the other ADs within the same region. The ADs within the same region may be connected to each other by a low latency, high bandwidth network, which makes it possible to provide high-availability connectivity to other networks (e.g., the Internet, customers' on-premises networks, etc.) and to build replicated systems in multiple ADs for both high-availability and disaster recovery. Cloud services use multiple ADs to ensure high availability and to protect against resource failure. As the infrastructure provided by the IaaS provider grows, more regions and ADs may be added with additional capacity. Traffic between availability domains is usually encrypted.

[0055] In certain embodiments, regions are grouped into realms. A realm is a logical collection of regions. Realms are isolated from each other and do not share any data. Regions in the same realm may communicate with each other, but regions in different realms cannot. A customer's tenancy or account with the CSP exists in a single realm and can be spread across one or more regions that belong to that realm. Typically, when a customer subscribes to an IaaS service, a tenancy or account is created for that customer in the customer-specified region (referred to as the "home" region) within a realm. A customer can extend the customer's tenancy across one or more other regions within the realm. A customer cannot access regions that are not in the realm where the customer's tenancy exists.

[0056] An IaaS provider can provide multiple realms, each realm catered to a particular set of customers or users. For example, a commercial realm may be provided for commercial customers. As another example, a realm may be provided for a specific country for customers within that country. As yet another example, a government realm may

be provided for a government, and the like. For example, the government realm may be catered for a specific government and may have a heightened level of security than a commercial realm. For example, Oracle Cloud Infrastructure (OCI) currently offers a realm for commercial regions and two realms (e.g., FedRAMP authorized and IL5 authorized) for government cloud regions.

[0057] In certain embodiments, an AD can be subdivided into one or more fault domains. A fault domain is a grouping of infrastructure resources within an AD to provide anti-affinity. Fault domains allow for the distribution of compute instances such that the instances are not on the same physical hardware within a single AD. This is known as anti-affinity. A fault domain refers to a set of hardware components (computers, switches, and more) that share a single point of failure. A compute pool is logically divided up into fault domains. Due to this, a hardware failure or compute hardware maintenance event that affects one fault domain does not affect instances in other fault domains. Depending on the embodiment, the number of fault domains for each AD may vary. For instance, in certain embodiments each AD contains three fault domains. A fault domain acts as a logical data center within an AD.

[0058] When a customer subscribes to an IaaS service, resources from CSPI are provisioned for the customer and associated with the customer's tenancy. The customer can use these provisioned resources to build private networks and deploy resources on these networks. The customer networks that are hosted in the cloud by the CSPI are referred to as virtual cloud networks (VCNs). A customer can set up one or more virtual cloud networks (VCNs) using CSPI resources allocated for the customer. A VCN is a virtual or software defined private network. The customer resources that are deployed in the customer's VCN can include compute instances (e.g., virtual machines, bare-metal instances) and other resources. These compute instances may represent various customer workloads such as applications, load balancers, databases, and the like. A compute instance deployed on a VCN can communicate with publicly accessible endpoints ("public endpoints") over a public network such as the Internet, with other instances in the same VCN or other VCNs (e.g., the customer's other VCNs, or VCNs not belonging to the customer), with the customer's on-premise data centers or networks, and with service endpoints, and other types of endpoints.

[0059] The CSP may provide various services using the CSPI. In some instances, customers of CSPI may themselves act like service providers and provide services using CSPI resources. A service provider may expose a service endpoint, which is characterized by identification information (e.g., an IP Address, a DNS name and port). A customer's resource (e.g., a compute instance) can consume a particular service by accessing a service endpoint exposed by the service for that particular service. These service endpoints are generally endpoints that are publicly accessible by users using public IP addresses associated with the endpoints via a public communication network such as the Internet. Network endpoints that are publicly accessible are also sometimes referred to as public endpoints.

[0060] In certain embodiments, a service provider may expose a service via an endpoint (sometimes referred to as a service endpoint) for the service. Customers of the service can then use this service endpoint to access the service. In certain implementations, a service endpoint provided for a service can be accessed by multiple customers that intend to consume that service. In other implementations, a dedicated service endpoint may be provided for a customer such that only that customer can access the service using that dedicated service endpoint.

[0061] In certain embodiments, when a VCN is created, it is associated with a private overlay Classless Inter-Domain Routing (CIDR) address space, which is a range of private overlay IP addresses that are assigned to the VCN (e.g., 10.0/16). A VCN includes associated subnets, route tables, and gateways. A VCN resides within a single region but can span one or more or all of the region's availability domains. A gateway is a virtual interface that is configured for a VCN and enables communication of traffic to and from the VCN to one or more endpoints outside the VCN. One or more different types of gateways may be configured for a VCN to enable communication to and from different types of endpoints.

[0062] A VCN can be subdivided into one or more sub-networks such as one or more subnets. A subnet is thus a unit of configuration or a subdivision that can be created within a VCN. A VCN can have one or multiple subnets. Each subnet within a VCN is associated with a contiguous range of overlay IP addresses (e.g., 10.0.0.0/24 and 10.0.1.0/24) that do not overlap with other subnets in that VCN, and which represent an address space subset within the address space of the VCN.

[0063] Each compute instance is associated with a virtual network interface card (VNIC), that enables the compute instance to participate in a subnet of a VCN. A VNIC is a logical representation of physical Network Interface Card (NIC). In general. a VNIC is an interface between an entity (e.g., a compute instance, a service) and a virtual network. A VNIC exists in a subnet, has one or more associated IP addresses, and associated security rules or policies. A VNIC is equivalent to a Layer-2 port on a switch. A VNIC is attached to a compute instance and to a subnet within a VCN. A VNIC associated with a compute instance enables the compute instance to be a part of a subnet of a VCN and enables the compute instance to communicate (e.g., send and receive packets) with endpoints that are on the same subnet as the compute instance, with endpoints in different subnets in the VCN, or with endpoints outside the VCN. The VNIC associated with a compute instance thus determines how the compute instance connects with endpoints inside and outside the VCN. A VNIC for a compute instance is created and associated with that compute instance when the compute instance is created and added to a subnet within a VCN. For a subnet comprising a set of compute instances, the subnet contains the VNICs corresponding to the set of compute instances, each VNIC attached to a compute instance within the set of computer instances.

[0064] Each compute instance is assigned a private overlay IP address via the VNIC associated with the compute instance. This private overlay IP address is assigned to the VNIC that is associated with the compute instance when the compute instance is created and used for routing traffic to and from the compute instance. All VNICs in a given subnet use the same route table, security lists, and DHCP options. As described above, each subnet within a VCN is associated with a contiguous range of overlay IP addresses (e.g., 10.0.0.0/24 and 10.0.1.0/24) that do not overlap with other subnets in that VCN, and which represent an address space subset within the address space of the VCN. For a VNIC on

a particular subnet of a VCN, the private overlay IP address that is assigned to the VNIC is an address from the contiguous range of overlay IP addresses allocated for the subnet.

[0065] In certain embodiments, a compute instance may optionally be assigned additional overlay IP addresses in addition to the private overlay IP address, such as, for example, one or more public IP addresses if in a public subnet. These multiple addresses are assigned either on the same VNIC or over multiple VNICs that are associated with the compute instance. Each instance however has a primary VNIC that is created during instance launch and is associated with the overlay private IP address assigned to the instance—this primary VNIC cannot be removed. Additional VNICs, referred to as secondary VNICs, can be added to an existing instance in the same availability domain as the primary VNIC. All the VNICs are in the same availability domain as the instance. A secondary VNIC can be in a subnet in the same VCN as the primary VNIC, or in a different subnet that is either in the same VCN or a different one.

[0066] A compute instance may optionally be assigned a public IP address if it is in a public subnet. A subnet can be designated as either a public subnet or a private subnet at the time the subnet is created. A private subnet means that the resources (e.g., compute instances) and associated VNICs in the subnet cannot have public overlay IP addresses. A public subnet means that the resources and associated VNICs in the subnet can have public IP addresses. A customer can designate a subnet to exist either in a single availability domain or across multiple availability domains in a region or realm.

[0067] As described above, a VCN may be subdivided into one or more subnets. In certain embodiments, a Virtual Router (VR) configured for the VCN (referred to as the VCN VR or just VR) enables communications between the subnets of the VCN. For a subnet within a VCN, the VR represents a logical gateway for that subnet that enables the subnet (i.e., the compute instances on that subnet) to communicate with endpoints on other subnets within the VCN, and with other endpoints outside the VCN. The VCN VR is a logical entity that is configured to route traffic between VNICs in the VCN and virtual gateways ("gateways") associated with the VCN. Gateways are further described below with respect to FIG. **1**. A VCN VR is a Layer-3/IP Layer concept. In one embodiment, there is one VCN VR for a VCN where the VCN VR has potentially an unlimited number of ports addressed by IP addresses, with one port for each subnet of the VCN. In this manner, the VCN VR has a different IP address for each subnet in the VCN that the VCN VR is attached to. The VR is also connected to the various gateways configured for a VCN. In certain embodiments, a particular overlay IP address from the overlay IP address range for a subnet is reserved for a port of the VCN VR for that subnet. For example, consider a VCN having two subnets with associated address ranges 10.0/16 and 10.1/16, respectively. For the first subnet within the VCN with address range 10.0/16, an address from this range is reserved for a port of the VCN VR for that subnet. In some instances, the first IP address from the range may be reserved for the VCN VR. For example, for the subnet with overlay IP address range 10.0/16, IP address 10.0.0.1 may be reserved for a port of the VCN VR for that subnet. For the second subnet within the same VCN with address range 10.1/16, the VCN VR may have a port for that second subnet with IP address 10.1.0.1. The VCN VR has a different IP address for each of the subnets in the VCN.

[0068] In some other embodiments, each subnet within a VCN may have its own associated VR that is addressable by the subnet using a reserved or default IP address associated with the VR. The reserved or default IP address may, for example, be the first IP address from the range of IP addresses associated with that subnet. The VNICs in the subnet can communicate (e.g., send and receive packets) with the VR associated with the subnet using this default or reserved IP address. In such an embodiment, the VR is the ingress/egress point for that subnet. The VR associated with a subnet within the VCN can communicate with other VRs associated with other subnets within the VCN. The VRs can also communicate with gateways associated with the VCN. The VR function for a subnet is running on or executed by one or more NVDs executing VNICs functionality for VNICs in the subnet.

[0069] Route tables, security rules, and DHCP options may be configured for a VCN. Route tables are virtual route tables for the VCN and include rules to route traffic from subnets within the VCN to destinations outside the VCN by way of gateways or specially configured instances. A VCN's route tables can be customized to control how packets are forwarded/routed to and from the VCN. DHCP options refers to configuration information that is automatically provided to the instances when they boot up.

[0070] Security rules configured for a VCN represent overlay firewall rules for the VCN. The security rules can include ingress and egress rules, and specify the types of traffic (e.g., based upon protocol and port) that is allowed in and out of the instances within the VCN. The customer can choose whether a given rule is stateful or stateless. For instance, the customer can allow incoming SSH traffic from anywhere to a set of instances by setting up a stateful ingress rule with source CIDR 0.0.0.0/0, and destination TCP port 22. Security rules can be implemented using network security groups or security lists. A network security group consists of a set of security rules that apply only to the resources in that group. A security list, on the other hand, includes rules that apply to all the resources in any subnet that uses the security list. A VCN may be provided with a default security list with default security rules. DHCP options configured for a VCN provide configuration information that is automatically provided to the instances in the VCN when the instances boot up.

[0071] In certain embodiments, the configuration information for a VCN is determined and stored by a VCN Control Plane. The configuration information for a VCN may include, for example, information about the address range associated with the VCN, subnets within the VCN and associated information, one or more VRs associated with the VCN, compute instances in the VCN and associated VNICs, NVDs executing the various virtualization network functions (e.g., VNICs, VRs, gateways) associated with the VCN, state information for the VCN, and other VCN-related information. In certain embodiments, a VCN Distribution Service publishes the configuration information stored by the VCN Control Plane, or portions thereof, to the NVDs. The distributed information may be used to update information (e.g., forwarding tables, routing tables, etc.) stored and used by the NVDs to forward packets to and from the compute instances in the VCN.

[0072] In certain embodiments, the creation of VCNs and subnets are handled by a VCN Control Plane (CP), and the launching of compute instances is handled by a Compute Control Plane. The Compute Control Plane is responsible for allocating the physical resources for the compute instance and then calls the VCN Control Plane to create and attach VNICs to the compute instance. The VCN CP also sends VCN data mappings to the VCN data plane that is configured to perform packet forwarding and routing functions. In certain embodiments, the VCN CP provides a distribution service that is responsible for providing updates to the VCN data plane. Examples of a VCN Control Plane are also depicted in FIGS. **6**, **7**, **8**, and **9** (see references **616**, **716**, **816**, and **916**) and described below.

[0073] A customer may create one or more VCNs using resources hosted by CSPI. A compute instance deployed on a customer VCN may communicate with different endpoints. These endpoints can include endpoints that are hosted by CSPI and endpoints outside CSPI.

[0074] Various different architectures for implementing cloud-based service using CSPI are depicted in FIGS. **1**, **2**, **3**, **4**, **5**, and **12-16**, and are described below. FIG. **1** is a high-level diagram of a distributed environment **100** showing an overlay or customer VCN hosted by CSPI according to certain embodiments. The distributed environment depicted in FIG. **1** includes multiple components in the overlay network. Distributed environment **100** depicted in FIG. **1** is merely an example and is not intended to unduly limit the scope of claimed embodiments. Many variations, alternatives, and modifications are possible. For example, in some implementations, the distributed environment depicted in FIG. **1** may have more or fewer systems or components than those shown in FIG. **1**, may combine two or more systems, or may have a different configuration or arrangement of systems.

[0075] As shown in the example depicted in FIG. **1**, distributed environment **100** comprises CSPI **101** that provides services and resources that customers can subscribe to and use to build their virtual cloud networks (VCNs). In certain embodiments, CSPI **101** offers IaaS services to subscribing customers. The data centers within CSPI **101** may be organized into one or more regions. One example region "Region US" **102** is shown in FIG. **1**. A customer has configured a customer VCN c/o Oracle International Corporation for region **102**. The customer may deploy various compute instances on VCN **104**, where the compute instances may include virtual machines or bare metal instances. Examples of instances include applications, database, load balancers, and the like.

[0076] In the embodiment depicted in FIG. **1**, customer VCN **104** comprises two subnets, namely, "Subnet-**1**" and "Subnet-**2**", each subnet with its own CIDR IP address range. In FIG. **1**, the overlay IP address range for Subnet-**1** is 10.0/16 and the address range for Subnet-**2** is 10.1/16. A VCN Virtual Router **105** represents a logical gateway for the VCN that enables communications between subnets of the VCN **104**, and with other endpoints outside the VCN. VCN VR **105** is configured to route traffic between VNICs in VCN **104** and gateways associated with VCN **104**. VCN VR **105** provides a port for each subnet of VCN **104**. For example, VR **105** may provide a port with IP address 10.0.0.1 for Subnet-**1** and a port with IP address 10.1.0.1 for Subnet-**2**.

[0077] Multiple compute instances may be deployed on each subnet, where the compute instances can be virtual machine instances, and/or bare metal instances. The compute instances in a subnet may be hosted by one or more host machines within CSPI **101**. A compute instance participates in a subnet via a VNIC associated with the compute instance. For example, as shown in FIG. **1**, a compute instance C**1** is part of Subnet-**1** via a VNIC associated with the compute instance. Likewise, compute instance C**2** is part of Subnet-**1** via a VNIC associated with C**2**. In a similar manner, multiple compute instances, which may be virtual machine instances or bare metal instances, may be part of Subnet-**1**. Via its associated VNIC, each compute instance is assigned a private overlay IP address and a MAC address. For example, in FIG. **1**, compute instance C**1** has an overlay IP address of 10.0.0.2 and a MAC address of M**1**, while compute instance C**2** has a private overlay IP address of 10.0.0.3 and a MAC address of M**2**. Each compute instance in Subnet-**1**, including compute instances C**1** and C**2**, has a default route to VCN VR **105** using IP address 10.0.0.1, which is the IP address for a port of VCN VR **105** for Subnet-**1**.

[0078] Subnet-**2** can have multiple compute instances deployed on it, including virtual machine instances and/or bare metal instances. For example, as shown in FIG. **1**, compute instances D**1** and D**2** are part of Subnet-**2** via VNICs associated with the respective compute instances. In the embodiment depicted in FIG. **1**, compute instance D**1** has an overlay IP address of 10.1.0.2 and a MAC address of MM**1**, while compute instance D**2** has a private overlay IP address of 10.1.0.3 and a MAC address of MM**2**. Each compute instance in Subnet-**2**, including compute instances D**1** and D**2**, has a default route to VCN VR **105** using IP address 10.1.0.1, which is the IP address for a port of VCN VR **105** for Subnet-**2**.

[0079] VCN A **104** may also include one or more load balancers. For example, a load balancer may be provided for a subnet and may be configured to load balance traffic across multiple compute instances on the subnet. A load balancer may also be provided to load balance traffic across subnets in the VCN.

[0080] A particular compute instance deployed on VCN **104** can communicate with various different endpoints. These endpoints may include endpoints that are hosted by CSPI **200** and endpoints outside CSPI **200**. Endpoints that are hosted by CSPI **101** may include: an endpoint on the same subnet as the particular compute instance (e.g., communications between two compute instances in Subnet-**1**); an endpoint on a different subnet but within the same VCN (e.g., communication between a compute instance in Subnet-**1** and a compute instance in Subnet-**2**); an endpoint in a different VCN in the same region (e.g., communications between a compute instance in Subnet-**1** and an endpoint in a VCN in the same region **106** or **110**, communications between a compute instance in Subnet-**1** and an endpoint in service network **110** in the same region); or an endpoint in a VCN in a different region (e.g., communications between a compute instance in Subnet-**1** and an endpoint in a VCN in a different region **108**). A compute instance in a subnet hosted by CSPI **101** may also communicate with endpoints that are not hosted by CSPI **101** (i.e., are outside CSPI **101**). These outside endpoints include endpoints in the customer's on-premises network **116**, endpoints within other remote cloud hosted networks **118**, public endpoints **114** accessible via a public network such as the Internet, and other endpoints.

[0081] Communications between compute instances on the same subnet are facilitated using VNICs associated with the source compute instance and the destination compute instance. For example, compute instance C**1** in Subnet-**1** may want to send packets to compute instance C**2** in Subnet-**1**. For a packet originating at a source compute instance and whose destination is another compute instance in the same subnet, the packet is first processed by the VNIC associated with the source compute instance. Processing performed by the VNIC associated with the source compute instance can include determining destination information for the packet from the packet headers, identifying any policies (e.g., security lists) configured for the VNIC associated with the source compute instance, determining a next hop for the packet, performing any packet encapsulation/decapsulation functions as needed, and then forwarding/routing the packet to the next hop with the goal of facilitating communication of the packet to its intended destination. When the destination compute instance is in the same subnet as the source compute instance, the VNIC associated with the source compute instance is configured to identify the VNIC associated with the destination compute instance and forward the packet to that VNIC for processing. The VNIC associated with the destination compute instance is then executed and forwards the packet to the destination compute instance.

[0082] For a packet to be communicated from a compute instance in a subnet to an endpoint in a different subnet in the same VCN, the communication is facilitated by the VNICs associated with the source and destination compute instances and the VCN VR. For example, if compute instance C**1** in Subnet-**1** in FIG. **1** wants to send a packet to compute instance D**1** in Subnet-**2**, the packet is first processed by the VNIC associated with compute instance C**1**. The VNIC associated with compute instance C**1** is configured to route the packet to the VCN VR **105** using default route or port 10.0.0.1 of the VCN VR. VCN VR **105** is configured to route the packet to Subnet-**2** using port 10.1.0.1. The packet is then received and processed by the VNIC associated with D**1** and the VNIC forwards the packet to compute instance D**1**.

[0083] For a packet to be communicated from a compute instance in VCN **104** to an endpoint that is outside VCN **104**, the communication is facilitated by the VNIC associated with the source compute instance, VCN VR **105**, and gateways associated with VCN **104**. One or more types of gateways may be associated with VCN **104**. A gateway is an interface between a VCN and another endpoint, where another endpoint is outside the VCN. A gateway is a Layer-3/IP layer concept and enables a VCN to communicate with endpoints outside the VCN. A gateway thus facilitates traffic flow between a VCN and other VCNs or networks. Various different types of gateways may be configured for a VCN to facilitate different types of communications with different types of endpoints. Depending upon the gateway, the communications may be over public networks (e.g., the Internet) or over private networks. Various communication protocols may be used for these communications.

[0084] For example, compute instance C**1** may want to communicate with an endpoint outside VCN **104**. The packet may be first processed by the VNIC associated with source compute instance C**1**. The VNIC processing determines that the destination for the packet is outside the Subnet-**1** of C**1**. The VNIC associated with C**1** may forward the packet to VCN VR **105** for VCN **104**. VCN VR **105** then processes the packet and as part of the processing, based upon the destination for the packet, determines a particular gateway associated with VCN **104** as the next hop for the packet. VCN VR **105** may then forward the packet to the particular identified gateway. For example, if the destination is an endpoint within the customer's on-premise network, then the packet may be forwarded by VCN VR **105** to Dynamic Routing Gateway (DRG) gateway **122** configured for VCN **104**. The packet may then be forwarded from the gateway to a next hop to facilitate communication of the packet to it final intended destination.

[0085] Various different types of gateways may be configured for a VCN. Examples of gateways that may be configured for a VCN are depicted in FIG. **1** and described below. Examples of gateways associated with a VCN are also depicted in FIGS. **12**, **13**, **14**, and **15** (for example, gateways referenced by reference numbers **1234**, **1236**, **1238**, **1334**, **1336**, **1338**, **1434**, **1436**, **1438**, **1534**, **1536**, and **1538**) and described below. As shown in the embodiment depicted in FIG. **1**, a Dynamic Routing Gateway (DRG) **122** may be added to or be associated with customer VCN **104** and provides a path for private network traffic communication between customer VCN **104** and another endpoint, where the another endpoint can be the customer's on-premise network **116**, a VCN **108** in a different region of CSPI **101**, or other remote cloud networks **118** not hosted by CSPI **101**. Customer on-premise network **116** may be a customer network or a customer data center built using the customer's resources. Access to customer on-premise network **116** is generally very restricted. For a customer that has both a customer on-premise network **116** and one or more VCNs **104** deployed or hosted in the cloud by CSPI **101**, the customer may want their on-premise network **116** and their cloud based VCN **104** to be able to communicate with each other. This enables a customer to build an extended hybrid environment encompassing the customer's VCN **104** hosted by CSPI **101** and their on-premises network **116**. DRG **122** enables this communication. To enable such communications, a communication channel **124** is set up where one endpoint of the channel is in customer on-premise network **116** and the other endpoint is in CSPI **101** and connected to customer VCN **104**. Communication channel **124** can be over public communication networks such as the Internet or private communication networks. Various different communication protocols may be used such as IPsec VPN technology over a public communication network such as the Internet, Oracle's FastConnect technology that uses a private network instead of a public network, and others. The device or equipment in customer on-premise network **116** that forms one end point for communication channel **124** is referred to as the customer premise equipment (CPE), such as CPE **126** depicted in FIG. **1**. On the CSPI **101** side, the endpoint may be a host machine executing DRG **122**.

[0086] In certain embodiments, a Remote Peering Connection (RPC) can be added to a DRG, which allows a customer to peer one VCN with another VCN in a different region. Using such an RPC, customer VCN **104** can use DRG **122** to connect with a VCN **108** in another region. DRG **122** may also be used to communicate with other remote cloud networks **118**, not hosted by CSPI **101** such as a Microsoft Azure cloud, Amazon AWS cloud, and others.

[0087] As shown in FIG. **1**, an Internet Gateway (IGW) **120** may be configured for customer VCN **104** the enables

a compute instance on VCN **104** to communicate with public endpoints **114** accessible over a public network such as the Internet. IGW **120** is a gateway that connects a VCN to a public network such as the Internet. IGW **120** enables a public subnet (where the resources in the public subnet have public overlay IP addresses) within a VCN, such as VCN **104**, direct access to public endpoints **112** on a public network **114** such as the Internet. Using IGW **120**, connections can be initiated from a subnet within VCN **104** or from the Internet.

[0088] A Network Address Translation (NAT) gateway **128** can be configured for customer's VCN **104** and enables cloud resources in the customer's VCN, which do not have dedicated public overlay IP addresses, access to the Internet and it does so without exposing those resources to direct incoming Internet connections (e.g., L4-L7 connections). This enables a private subnet within a VCN, such as private Subnet-**1** in VCN **104**, with private access to public endpoints on the Internet. In NAT gateways, connections can be initiated only from the private subnet to the public Internet and not from the Internet to the private subnet.

[0089] In certain embodiments, a Service Gateway (SGW) **126** can be configured for customer VCN **104** and provides a path for private network traffic between VCN **104** and supported services endpoints in a service network **110**. In certain embodiments, service network **110** may be provided by the CSP and may provide various services. An example of such a service network is Oracle's Services Network, which provides various services that can be used by customers. For example, a compute instance (e.g., a database system) in a private subnet of customer VCN **104** can back up data to a service endpoint (e.g., Object Storage) without needing public IP addresses or access to the Internet. In certain embodiments, a VCN can have only one SGW, and connections can only be initiated from a subnet within the VCN and not from service network **110**. If a VCN is peered with another, resources in the other VCN typically cannot access the SGW. Resources in on-premises networks that are connected to a VCN with FastConnect or VPN Connect can also use the service gateway configured for that VCN.

[0090] In certain implementations, SGW **126** uses the concept of a service Classless Inter-Domain Routing (CIDR) label, which is a string that represents all the regional public IP address ranges for the service or group of services of interest. The customer uses the service CIDR label when they configure the SGW and related route rules to control traffic to the service. The customer can optionally utilize it when configuring security rules without needing to adjust them if the service's public IP addresses change in the future.

[0091] A Local Peering Gateway (LPG) **132** is a gateway that can be added to customer VCN **104** and enables VCN **104** to peer with another VCN in the same region. Peering means that the VCNs communicate using private IP addresses, without the traffic traversing a public network such as the Internet or without routing the traffic through the customer's on-premises network **116**. In preferred embodiments, a VCN has a separate LPG for each peering it establishes. Local Peering or VCN Peering is a common practice used to establish network connectivity between different applications or infrastructure management functions.

[0092] Service providers, such as providers of services in service network **110**, may provide access to services using different access models. According to a public access model, services may be exposed as public endpoints that are publicly accessible by compute instance in a customer VCN via a public network such as the Internet and or may be privately accessible via SGW **126**. According to a specific private access model, services are made accessible as private IP endpoints in a private subnet in the customer's VCN. This is referred to as a Private Endpoint (PE) access and enables a service provider to expose their service as an instance in the customer's private network. A Private Endpoint resource represents a service within the customer's VCN. Each PE manifests as a VNIC (referred to as a PE-VNIC, with one or more private IPs) in a subnet chosen by the customer in the customer's VCN. A PE thus provides a way to present a service within a private customer VCN subnet using a VNIC. Since the endpoint is exposed as a VNIC, all the features associates with a VNIC such as routing rules, security lists, etc., are now available for the PE VNIC.

[0093] A service provider can register their service to enable access through a PE. The provider can associate policies with the service that restricts the service's visibility to the customer tenancies. A provider can register multiple services under a single virtual IP address (VIP), especially for multi-tenant services. There may be multiple such private endpoints (in multiple VCNs) that represent the same service.

[0094] Compute instances in the private subnet can then use the PE VNIC's private IP address or the service DNS name to access the service. Compute instances in the customer VCN can access the service by sending traffic to the private IP address of the PE in the customer VCN. A Private Access Gateway (PAGW) **130** is a gateway resource that can be attached to a service provider VCN (e.g., a VCN in service network **110**) that acts as an ingress/egress point for all traffic from/to customer subnet private endpoints. PAGW **130** enables a provider to scale the number of PE connections without utilizing its internal IP address resources. A provider needs only configure one PAGW for any number of services registered in a single VCN. Providers can represent a service as a private endpoint in multiple VCNs of one or more customers. From the customer's perspective, the PE VNIC, which, instead of being attached to a customer's instance, appears attached to the service with which the customer wishes to interact. The traffic destined to the private endpoint is routed via PAGW **130** to the service. These are referred to as customer-to-service private connections (C2S connections).

[0095] The PE concept can also be used to extend the private access for the service to customer's on-premises networks and data centers, by allowing the traffic to flow through FastConnect/IPsec links and the private endpoint in the customer VCN. Private access for the service can also be extended to the customer's peered VCNs, by allowing the traffic to flow between LPG **132** and the PE in the customer's VCN.

[0096] A customer can control routing in a VCN at the subnet level, so the customer can specify which subnets in the customer's VCN, such as VCN **104**, use each gateway. A VCN's route tables are used to decide if traffic is allowed out of a VCN through a particular gateway. For example, in a particular instance, a route table for a public subnet within customer VCN **104** may send non-local traffic through IGW **120**. The route table for a private subnet within the same customer VCN **104** may send traffic destined for CSP

services through SGW **126**. All remaining traffic may be sent via the NAT gateway **128**. Route tables only control traffic going out of a VCN.

[0097] Security lists associated with a VCN are used to control traffic that comes into a VCN via a gateway via inbound connections. All resources in a subnet use the same route table and security lists. Security lists may be used to control specific types of traffic allowed in and out of instances in a subnet of a VCN. Security list rules may comprise ingress (inbound) and egress (outbound) rules. For example, an ingress rule may specify an allowed source address range, while an egress rule may specify an allowed destination address range. Security rules may specify a particular protocol (e.g., TCP, ICMP), a particular port (e.g., 22 for SSH, 3389 for Windows RDP), etc. In certain implementations, an instance's operating system may enforce its own firewall rules that are aligned with the security list rules. Rules may be stateful (e.g., a connection is tracked, and the response is automatically allowed without an explicit security list rule for the response traffic) or stateless.

[0098] Access from a customer VCN (i.e., by a resource or compute instance deployed on VCN **104**) can be categorized as public access, private access, or dedicated access. Public access refers to an access model where a public IP address or a NAT is used to access a public endpoint. Private access enables customer workloads in VCN **104** with private IP addresses (e.g., resources in a private subnet) to access services without traversing a public network such as the Internet. In certain embodiments, CSPI **101** enables customer VCN workloads with private IP addresses to access the (public service endpoints of) services using a service gateway. A service gateway thus offers a private access model by establishing a virtual link between the customer's VCN and the service's public endpoint residing outside the customer's private network.

[0099] Additionally, CSPI may offer dedicated public access using technologies such as FastConnect public peering where customer on-premises instances can access one or more services in a customer VCN using a FastConnect connection and without traversing a public network such as the Internet. CSPI also may also offer dedicated private access using FastConnect private peering where customer on-premises instances with private IP addresses can access the customer's VCN workloads using a FastConnect connection. FastConnect is a network connectivity alternative to using the public Internet to connect a customer's on-premise network to CSPI and its services. FastConnect provides an easy, elastic, and economical way to create a dedicated and private connection with higher bandwidth options and a more reliable and consistent networking experience when compared to Internet-based connections.

[0100] FIG. **1** and the accompanying description above describes various virtualized components in an example virtual network. As described above, the virtual network is built on the underlying physical or substrate network. FIG. **2** depicts a simplified architectural diagram of the physical components in the physical network within CSPI **200** that provide the underlay for the virtual network according to certain embodiments. As shown, CSPI **200** provides a distributed environment comprising components and resources (e.g., compute, memory, and networking resources) provided by a cloud service provider (CSP). These components and resources are used to provide cloud services (e.g., IaaS services) to subscribing customers, i.e., customers that have subscribed to one or more services provided by the CSP. Based upon the services subscribed to by a customer, a subset of resources (e.g., compute, memory, and networking resources) of CSPI **200** are provisioned for the customer. Customers can then build their own cloud-based (i.e., CSPI-hosted) customizable and private virtual networks using physical compute, memory, and networking resources provided by CSPI **200**. As previously indicated, these customer networks are referred to as virtual cloud networks (VCNs). A customer can deploy one or more customer resources, such as compute instances, on these customer VCNs. Compute instances can be in the form of virtual machines, bare metal instances, and the like. CSPI **200** provides infrastructure and a set of complementary cloud services that enable customers to build and run a wide range of applications and services in a highly available hosted environment.

[0101] In the example embodiment depicted in FIG. **2**, the physical components of CSPI **200** include one or more physical host machines or physical servers (e.g., **202**, **206**, **208**), network virtualization devices (NVDs) (e.g., **210**, **212**), top-of-rack (TOR) switches (e.g., **214**, **216**), and a physical network (e.g., **218**), and switches in physical network **218**. The physical host machines or servers may host and execute various compute instances that participate in one or more subnets of a VCN. The compute instances may include virtual machine instances, and bare metal instances. For example, the various compute instances depicted in FIG. **1** may be hosted by the physical host machines depicted in FIG. **2**. The virtual machine compute instances in a VCN may be executed by one host machine or by multiple different host machines. The physical host machines may also host virtual host machines, container-based hosts or functions, and the like. The VNICs and VCN VR depicted in FIG. **1** may be executed by the NVDs depicted in FIG. **2**. The gateways depicted in FIG. **1** may be executed by the host machines and/or by the NVDs depicted in FIG. **2**.

[0102] The host machines or servers may execute a hypervisor (also referred to as a virtual machine monitor or VMM) that creates and enables a virtualized environment on the host machines. The virtualization or virtualized environment facilitates cloud-based computing. One or more compute instances may be created, executed, and managed on a host machine by a hypervisor on that host machine. The hypervisor on a host machine enables the physical computing resources of the host machine (e.g., compute, memory, and networking resources) to be shared between the various compute instances executed by the host machine.

[0103] For example, as depicted in FIG. **2**, host machines **202** and **208** execute hypervisors **260** and **266**, respectively. These hypervisors may be implemented using software, firmware, or hardware, or combinations thereof. Typically, a hypervisor is a process or a software layer that sits on top of the host machine's operating system (OS), which in turn executes on the hardware processors of the host machine. The hypervisor provides a virtualized environment by enabling the physical computing resources (e.g., processing resources such as processors/cores, memory resources, networking resources) of the host machine to be shared among the various virtual machine compute instances executed by the host machine. For example, in FIG. **2**, hypervisor **260** may sit on top of the OS of host machine **202** and enables the computing resources (e.g., processing, memory, and networking resources) of host machine **202** to be shared

between compute instances (e.g., virtual machines) executed by host machine **202**. A virtual machine can have its own operating system (referred to as a guest operating system), which may be the same as or different from the OS of the host machine. The operating system of a virtual machine executed by a host machine may be the same as or different from the operating system of another virtual machine executed by the same host machine. A hypervisor thus enables multiple operating systems to be executed alongside each other while sharing the same computing resources of the host machine. The host machines depicted in FIG. **2** may have the same or different types of hypervisors.

[0104] A compute instance can be a virtual machine instance or a bare metal instance. In FIG. **2**, compute instances **268** on host machine **202** and **274** on host machine **208** are examples of virtual machine instances. Host machine **206** is an example of a bare metal instance that is provided to a customer.

[0105] In certain instances, an entire host machine may be provisioned to a single customer, and all of the one or more compute instances (either virtual machines or bare metal instance) hosted by that host machine belong to that same customer. In other instances, a host machine may be shared between multiple customers (i.e., multiple tenants). In such a multi-tenancy scenario, a host machine may host virtual machine compute instances belonging to different customers. These compute instances may be members of different VCNs of different customers. In certain embodiments, a bare metal compute instance is hosted by a bare metal server without a hypervisor. When a bare metal compute instance is provisioned, a single customer or tenant maintains control of the physical CPU, memory, and network interfaces of the host machine hosting the bare metal instance and the host machine is not shared with other customers or tenants.

[0106] As previously described, each compute instance that is part of a VCN is associated with a VNIC that enables the compute instance to become a member of a subnet of the VCN. The VNIC associated with a compute instance facilitates the communication of packets or frames to and from the compute instance. A VNIC is associated with a compute instance when the compute instance is created. In certain embodiments, for a compute instance executed by a host machine, the VNIC associated with that compute instance is executed by an NVD connected to the host machine. For example, in FIG. **2**, host machine **202** executes a virtual machine compute instance **268** that is associated with VNIC **276**, and VNIC **276** is executed by NVD **210** connected to host machine **202**. As another example, bare metal instance **272** hosted by host machine **206** is associated with VNIC **280** that is executed by NVD **212** connected to host machine **206**. As yet another example, VNIC **284** is associated with compute instance **274** executed by host machine **208**, and VNIC **284** is executed by NVD **212** connected to host machine **208**.

[0107] For compute instances hosted by a host machine, an NVD connected to that host machine also executes VCN VRs corresponding to VCNs of which the compute instances are members. For example, in the embodiment depicted in FIG. **2**, NVD **210** executes VCN VR **277** corresponding to the VCN of which compute instance **268** is a member. NVD **212** may also execute one or more VCN VRs **283** corresponding to VCNs corresponding to the compute instances hosted by host machines **206** and **208**.

[0108] A host machine may include one or more network interface cards (NIC) that enable the host machine to be connected to other devices. A NIC on a host machine may provide one or more ports (or interfaces) that enable the host machine to be communicatively connected to another device. For example, a host machine may be connected to an NVD using one or more ports (or interfaces) provided on the host machine and on the NVD. A host machine may also be connected to other devices such as another host machine.

[0109] For example, in FIG. **2**, host machine **202** is connected to NVD **210** using link **220** that extends between a port **234** provided by a NIC **232** of host machine **202** and between a port **236** of NVD **210**. Host machine **206** is connected to NVD **212** using link **224** that extends between a port **246** provided by a NIC **244** of host machine **206** and between a port **248** of NVD **212**. Host machine **208** is connected to NVD **212** using link **226** that extends between a port **252** provided by a NIC **250** of host machine **208** and between a port **254** of NVD **212**.

[0110] The NVDs are in turn connected via communication links to top-of-the-rack (TOR) switches, which are connected to physical network **218** (also referred to as the switch fabric). In certain embodiments, the links between a host machine and an NVD, and between an NVD and a TOR switch are Ethernet links. For example, in FIG. **2**, NVDs **210** and **212** are connected to TOR switches **214** and **216**, respectively, using links **228** and **230**. In certain embodiments, the links **220**, **224**, **226**, **228**, and **230** are Ethernet links. The collection of host machines and NVDs that are connected to a TOR is sometimes referred to as a rack.

[0111] Physical network **218** provides a communication fabric that enables TOR switches to communicate with each other. Physical network **218** can be a multi-tiered network. In certain implementations, physical network **218** is a multi-tiered Clos network of switches, with TOR switches **214** and **216** representing the leaf level nodes of the multi-tiered and multi-node physical switching network **218**. Different Clos network configurations are possible including but not limited to a 2-tier network, a 3-tier network, a 4-tier network, a 5-tier network, and in general a "n"-tiered network. An example of a Clos network is depicted in FIG. **5** and described below.

[0112] Various different connection configurations are possible between host machines and NVDs such as one-to-one configuration, many-to-one configuration, one-to-many configuration, and others. In a one-to-one configuration implementation, each host machine is connected to its own separate NVD. For example, in FIG. **2**, host machine **202** is connected to NVD **210** via NIC **232** of host machine **202**. In a many-to-one configuration, multiple host machines are connected to one NVD. For example, in FIG. **2**, host machines **206** and **208** are connected to the same NVD **212** via NICs **244** and **250**, respectively.

[0113] In a one-to-many configuration, one host machine is connected to multiple NVDs. FIG. **3** shows an example within CSPI **300** where a host machine is connected to multiple NVDs. As shown in FIG. **3**, host machine **302** comprises a network interface card (NIC) **304** that includes multiple ports **306** and **308**. Host machine **300** is connected to a first NVD **310** via port **306** and link **320** and connected to a second NVD **312** via port **308** and link **322**. Ports **306** and **308** may be Ethernet ports and the links **320** and **322** between host machine **302** and NVDs **310** and **312** may be Ethernet links. NVD **310** is in turn connected to a first TOR

switch **314** and NVD **312** is connected to a second TOR switch **316**. The links between NVDs **310** and **312**, and TOR switches **314** and **316** may be Ethernet links. TOR switches **314** and **316** represent the Tier-**0** switching devices in multi-tiered physical network **318**.

[0114] The arrangement depicted in FIG. **3** provides two separate physical network paths to and from physical switch network **318** to host machine **302**: a first path traversing TOR switch **314** to NVD **310** to host machine **302**, and a second path traversing TOR switch **316** to NVD **312** to host machine **302**. The separate paths provide for enhanced availability (referred to as high availability) of host machine **302**. If there are problems in one of the paths (e.g., a link in one of the paths goes down) or devices (e.g., a particular NVD is not functioning), then the other path may be used for communications to/from host machine **302**.

[0115] In the configuration depicted in FIG. **3**, the host machine is connected to two different NVDs using two different ports provided by a NIC of the host machine. In other embodiments, a host machine may include multiple NICs that enable connectivity of the host machine to multiple NVDs.

[0116] Referring back to FIG. **2**, an NVD is a physical device or component that performs one or more network and/or storage virtualization functions. An NVD may be any device with one or more processing units (e.g., CPUs, Network Processing Units (NPUs), FPGAs, packet processing pipelines, etc.), memory including cache, and ports. The various virtualization functions may be performed by software/firmware executed by the one or more processing units of the NVD.

[0117] An NVD may be implemented in various different forms. For example, in certain embodiments, an NVD is implemented as an interface card referred to as a smartNIC or an intelligent MC with an embedded processor onboard. A smartNIC is a separate device from the NICs on the host machines. In FIG. **2**, the NVDs **210** and **212** may be implemented as smartNICs that are connected to host machines **202**, and host machines **206** and **208**, respectively.

[0118] A smartNIC is however just one example of an NVD implementation. Various other implementations are possible. For example, in some other implementations, an NVD or one or more functions performed by the NVD may be incorporated into or performed by one or more host machines, one or more TOR switches, and other components of CSPI **200**. For example, an NVD may be embodied in a host machine where the functions performed by an NVD are performed by the host machine. As another example, an NVD may be part of a TOR switch, or a TOR switch may be configured to perform functions performed by an NVD that enables the TOR switch to perform various complex packet transformations that are used for a public cloud. A TOR that performs the functions of an NVD is sometimes referred to as a smart TOR. In yet other implementations, where virtual machines (VMs) instances, but not bare metal (BM) instances, are offered to customers, functions performed by an NVD may be implemented inside a hypervisor of the host machine. In some other implementations, some of the functions of the NVD may be offloaded to a centralized service running on a fleet of host machines.

[0119] In certain embodiments, such as when implemented as a smartNIC as shown in FIG. **2**, an NVD may comprise multiple physical ports that enable it to be connected to one or more host machines and to one or more TOR switches. A port on an NVD can be classified as a host-facing port (also referred to as a "south port") or a network-facing or TOR-facing port (also referred to as a "north port"). A host-facing port of an NVD is a port that is used to connect the NVD to a host machine. Examples of host-facing ports in FIG. **2** include port **236** on NVD **210**, and ports **248** and **254** on NVD **212**. A network-facing port of an NVD is a port that is used to connect the NVD to a TOR switch. Examples of network-facing ports in FIG. **2** include port **256** on NVD **210**, and port **258** on NVD **212**. As shown in FIG. **2**, NVD **210** is connected to TOR switch **214** using link **228** that extends from port **256** of NVD **210** to the TOR switch **214**. Likewise, NVD **212** is connected to TOR switch **216** using link **230** that extends from port **258** of NVD **212** to the TOR switch **216**.

[0120] An NVD receives packets and frames from a host machine (e.g., packets and frames generated by a compute instance hosted by the host machine) via a host-facing port and, after performing the necessary packet processing, may forward the packets and frames to a TOR switch via a network-facing port of the NVD. An NVD may receive packets and frames from a TOR switch via a network-facing port of the NVD and, after performing the necessary packet processing, may forward the packets and frames to a host machine via a host-facing port of the NVD.

[0121] In certain embodiments, there may be multiple ports and associated links between an NVD and a TOR switch. These ports and links may be aggregated to form a link aggregator group of multiple ports or links (referred to as a LAG). Link aggregation allows multiple physical links between two endpoints (e.g., between an NVD and a TOR switch) to be treated as a single logical link. All the physical links in a given LAG may operate in full-duplex mode at the same speed. LAGs help increase the bandwidth and reliability of the connection between two endpoints. If one of the physical links in the LAG goes down, traffic is dynamically and transparently reassigned to one of the other physical links in the LAG. The aggregated physical links deliver higher bandwidth than each individual link. The multiple ports associated with a LAG are treated as a single logical port. Traffic can be load-balanced across the multiple physical links of a LAG. One or more LAGs may be configured between two endpoints. The two endpoints may be between an NVD and a TOR switch, between a host machine and an NVD, and the like.

[0122] An NVD implements or performs network virtualization functions. These functions are performed by software/firmware executed by the NVD. Examples of network virtualization functions include without limitation: packet encapsulation and de-capsulation functions; functions for creating a VCN network; functions for implementing network policies such as VCN security list (firewall) functionality; functions that facilitate the routing and forwarding of packets to and from compute instances in a VCN; and the like. In certain embodiments, upon receiving a packet, an NVD is configured to execute a packet processing pipeline for processing the packet and determining how the packet is to be forwarded or routed. As part of this packet processing pipeline, the NVD may execute one or more virtual functions associated with the overlay network such as executing VNICs associated with compute instances in the VCN, executing a Virtual Router (VR) associated with the VCN, the encapsulation and decapsulation of packets to facilitate forwarding or routing in the virtual network, execution of

certain gateways (e.g., the Local Peering Gateway), the implementation of Security Lists, Network Security Groups, network address translation (NAT) functionality (e.g., the translation of Public IP to Private IP on a host by host basis), throttling functions, and other functions.

[0123] In certain embodiments, the packet processing data path in an NVD may comprise multiple packet pipelines, each composed of a series of packet transformation stages. In certain implementations, upon receiving a packet, the packet is parsed and classified to a single pipeline. The packet is then processed in a linear fashion, one stage after another, until the packet is either dropped or sent out over an interface of the NVD. These stages provide basic functional packet processing building blocks (e.g., validating headers, enforcing throttle, inserting new Layer-2 headers, enforcing L4 firewall, VCN encapsulation/decapsulation, etc.) so that new pipelines can be constructed by composing existing stages, and new functionality can be added by creating new stages and inserting them into existing pipelines.

[0124] An NVD may perform both control plane and data plane functions corresponding to a control plane and a data plane of a VCN. Examples of a VCN Control Plane are also depicted in FIGS. **12**, **13**, **14**, and **15** (see references **1216**, **1316**, **1416**, and **1516**) and described below. Examples of a VCN Data Plane are depicted in FIGS. **12**, **13**, **14**, and **15** (see references **1218**, **1318**, **1418**, and **1518**) and described below. The control plane functions include functions used for configuring a network (e.g., setting up routes and route tables, configuring VNICs, etc.) that controls how data is to be forwarded. In certain embodiments, a VCN Control Plane is provided that computes all the overlay-to-substrate mappings centrally and publishes them to the NVDs and to the virtual network edge devices such as various gateways such as the DRG, the SGW, the IGW, etc. Firewall rules may also be published using the same mechanism. In certain embodiments, an NVD only gets the mappings that are relevant for that NVD. The data plane functions include functions for the actual routing/forwarding of a packet based upon configuration set up using control plane. A VCN data plane is implemented by encapsulating the customer's network packets before they traverse the substrate network. The encapsulation/decapsulation functionality is implemented on the NVDs. In certain embodiments, an NVD is configured to intercept all network packets in and out of host machines and perform network virtualization functions.

[0125] As indicated above, an NVD executes various virtualization functions including VNICs and VCN VRs. An NVD may execute VNICs associated with the compute instances hosted by one or more host machines connected to the VNIC. For example, as depicted in FIG. **2**, NVD **210** executes the functionality for VNIC **276** that is associated with compute instance **268** hosted by host machine **202** connected to NVD **210**. As another example, NVD **212** executes VNIC **280** that is associated with bare metal compute instance **272** hosted by host machine **206** and executes VNIC **284** that is associated with compute instance **274** hosted by host machine **208**. A host machine may host compute instances belonging to different VCNs, which belong to different customers, and the NVD connected to the host machine may execute the VNICs (i.e., execute VNICs-relate functionality) corresponding to the compute instances.

[0126] An NVD also executes VCN Virtual Routers corresponding to the VCNs of the compute instances. For example, in the embodiment depicted in FIG. **2**, NVD **210** executes VCN VR **277** corresponding to the VCN to which compute instance **268** belongs. NVD **212** executes one or more VCN VRs **283** corresponding to one or more VCNs to which compute instances hosted by host machines **206** and **208** belong. In certain embodiments, the VCN VR corresponding to that VCN is executed by all the NVDs connected to host machines that host at least one compute instance belonging to that VCN. If a host machine hosts compute instances belonging to different VCNs, an NVD connected to that host machine may execute VCN VRs corresponding to those different VCNs.

[0127] In addition to VNICs and VCN VRs, an NVD may execute various software (e.g., daemons) and include one or more hardware components that facilitate the various network virtualization functions performed by the NVD. For purposes of simplicity, these various components are grouped together as "packet processing components" shown in FIG. **2**. For example, NVD **210** comprises packet processing components **286** and NVD **212** comprises packet processing components **288**. For example, the packet processing components for an NVD may include a packet processor that is configured to interact with the NVD's ports and hardware interfaces to monitor all packets received by and communicated using the NVD and store network information. The network information may, for example, include network flow information identifying different network flows handled by the NVD and per flow information (e.g., per flow statistics). In certain embodiments, network flows information may be stored on a per VNIC basis. The packet processor may perform packet-by-packet manipulations as well as implement stateful NAT and L4 firewall (FW). As another example, the packet processing components may include a replication agent that is configured to replicate information stored by the NVD to one or more different replication target stores. As yet another example, the packet processing components may include a logging agent that is configured to perform logging functions for the NVD. The packet processing components may also include software for monitoring the performance and health of the NVD and, also possibly of monitoring the state and health of other components connected to the NVD.

[0128] FIG. **1** shows the components of an example virtual or overlay network including a VCN, subnets within the VCN, compute instances deployed on subnets, VNICs associated with the compute instances, a VR for a VCN, and a set of gateways configured for the VCN. The overlay components depicted in FIG. **1** may be executed or hosted by one or more of the physical components depicted in FIG. **2**. For example, the compute instances in a VCN may be executed or hosted by one or more host machines depicted in FIG. **2**. For a compute instance hosted by a host machine, the VNIC associated with that compute instance is typically executed by an NVD connected to that host machine (i.e., the VNIC functionality is provided by the NVD connected to that host machine). The VCN VR function for a VCN is executed by all the NVDs that are connected to host machines hosting or executing the compute instances that are part of that VCN. The gateways associated with a VCN may be executed by one or more different types of NVDs. For example, certain gateways may be executed by smartNICs, while others may be executed by one or more host machines or other implementations of NVDs.

[0129] As described above, a compute instance in a customer VCN may communicate with various different end-

points, where the endpoints can be within the same subnet as the source compute instance, in a different subnet but within the same VCN as the source compute instance, or with an endpoint that is outside the VCN of the source compute instance. These communications are facilitated using VNICs associated with the compute instances, the VCN VRs, and the gateways associated with the VCNs.

[0130] For communications between two compute instances on the same subnet in a VCN, the communication is facilitated using VNICs associated with the source and destination compute instances. The source and destination compute instances may be hosted by the same host machine or by different host machines. A packet originating from a source compute instance may be forwarded from a host machine hosting the source compute instance to an NVD connected to that host machine. On the NVD, the packet is processed using a packet processing pipeline, which can include execution of the VNIC associated with the source compute instance. Since the destination endpoint for the packet is within the same subnet, execution of the VNIC associated with the source compute instance results in the packet being forwarded to an NVD executing the VNIC associated with the destination compute instance, which then processes and forwards the packet to the destination compute instance. The VNICs associated with the source and destination compute instances may be executed on the same NVD (e.g., when both the source and destination compute instances are hosted by the same host machine) or on different NVDs (e.g., when the source and destination compute instances are hosted by different host machines connected to different NVDs). The VNICs may use routing/forwarding tables stored by the NVD to determine the next hop for the packet.

[0131] For a packet to be communicated from a compute instance in a subnet to an endpoint in a different subnet in the same VCN, the packet originating from the source compute instance is communicated from the host machine hosting the source compute instance to the NVD connected to that host machine. On the NVD, the packet is processed using a packet processing pipeline, which can include execution of one or more VNICs, and the VR associated with the VCN. For example, as part of the packet processing pipeline, the NVD executes or invokes functionality corresponding to the VNIC (also referred to as executes the VNIC) associated with source compute instance. The functionality performed by the VNIC may include looking at the VLAN tag on the packet. Since the packet's destination is outside the subnet, the VCN VR functionality is next invoked and executed by the NVD. The VCN VR then routes the packet to the NVD executing the VNIC associated with the destination compute instance. The VNIC associated with the destination compute instance then processes the packet and forwards the packet to the destination compute instance. The VNICs associated with the source and destination compute instances may be executed on the same NVD (e.g., when both the source and destination compute instances are hosted by the same host machine) or on different NVDs (e.g., when the source and destination compute instances are hosted by different host machines connected to different NVDs).

[0132] If the destination for the packet is outside the VCN of the source compute instance, then the packet originating from the source compute instance is communicated from the host machine hosting the source compute instance to the NVD connected to that host machine. The NVD executes the VNIC associated with the source compute instance. Since the destination end point of the packet is outside the VCN, the packet is then processed by the VCN VR for that VCN. The NVD invokes the VCN VR functionality, which may result in the packet being forwarded to an NVD executing the appropriate gateway associated with the VCN. For example, if the destination is an endpoint within the customer's on-premise network, then the packet may be forwarded by the VCN VR to the NVD executing the DRG gateway configured for the VCN. The VCN VR may be executed on the same NVD as the NVD executing the VNIC associated with the source compute instance or by a different NVD. The gateway may be executed by an NVD, which may be a smartNIC, a host machine, or other NVD implementation. The packet is then processed by the gateway and forwarded to a next hop that facilitates communication of the packet to its intended destination endpoint. For example, in the embodiment depicted in FIG. **2**, a packet originating from compute instance **268** may be communicated from host machine **202** to NVD **210** over link **220** (using NIC **232**). On NVD **210**, VNIC **276** is invoked since it is the VNIC associated with source compute instance **268**. VNIC **276** is configured to examine the encapsulated information in the packet and determine a next hop for forwarding the packet with the goal of facilitating communication of the packet to its intended destination endpoint, and then forward the packet to the determined next hop.

[0133] A compute instance deployed on a VCN can communicate with various different endpoints. These endpoints may include endpoints that are hosted by CSPI **200** and endpoints outside CSPI **200**. Endpoints hosted by CSPI **200** may include instances in the same VCN or other VCNs, which may be the customer's VCNs, or VCNs not belonging to the customer.

[0134] Communications between endpoints hosted by CSPI **200** may be performed over physical network **218**. A compute instance may also communicate with endpoints that are not hosted by CSPI **200** or are outside CSPI **200**. Examples of these endpoints include endpoints within a customer's on-premise network or data center, or public endpoints accessible over a public network such as the Internet. Communications with endpoints outside CSPI **200** may be performed over public networks (e.g., the Internet) (not shown in FIG. **2**) or private networks (not shown in FIG. **2**) using various communication protocols.

[0135] The architecture of CSPI **200** depicted in FIG. **2** is merely an example and is not intended to be limiting. Variations, alternatives, and modifications are possible in alternative embodiments. For example, in some implementations, CSPI **200** may have more or fewer systems or components than those shown in FIG. **2**, may combine two or more systems, or may have a different configuration or arrangement of systems. The systems, subsystems, and other components depicted in FIG. **2** may be implemented in software (e.g., code, instructions, program) executed by one or more processing units (e.g., processors, cores) of the respective systems, using hardware, or combinations thereof. The software may be stored on a non-transitory storage medium (e.g., on a memory device).

[0136] FIG. **4** depicts connectivity between a host machine and an NVD for providing I/O virtualization for supporting multitenancy according to certain embodiments. As depicted in FIG. **4**, host machine **402** executes a hypervisor **404** that provides a virtualized environment. Host

machine **402** executes two virtual machine instances, VM**1** **406** belonging to customer/tenant #**1** and VM**2** **408** belonging to customer/tenant #**2**. Host machine **402** comprises a physical NIC **410** that is connected to an NVD **412** via link **414**. Each of the compute instances is attached to a VNIC that is executed by NVD **412**. In the embodiment in FIG. **4**, VM**1** **406** is attached to VNIC-VM**1** **420** and VM**2** **408** is attached to VNIC-VM**2** **422**.

[0137] As shown in FIG. **4**, NIC **410** comprises two logical NICs, logical NIC A **416** and logical NIC B **418**. Each virtual machine is attached to and configured to work with its own logical NIC. For example, VM**1** **406** is attached to logical NIC A **416** and VM**2** **408** is attached to logical NIC B **418**. Even though host machine **402** comprises only one physical NIC **410** that is shared by the multiple tenants, due to the logical NICs, each tenant's virtual machine believes they have their own host machine and NIC.

[0138] In certain embodiments, each logical NIC is assigned its own VLAN ID. Thus, a specific VLAN ID is assigned to logical NIC A **416** for Tenant #**1** and a separate VLAN ID is assigned to logical NIC B **418** for Tenant #**2**. When a packet is communicated from VM**1** **406**, a tag assigned to Tenant #**1** is attached to the packet by the hypervisor and the packet is then communicated from host machine **402** to NVD **412** over link **414**. In a similar manner, when a packet is communicated from VM**2** **408**, a tag assigned to Tenant #**2** is attached to the packet by the hypervisor and the packet is then communicated from host machine **402** to NVD **412** over link **414**. Accordingly, a packet **424** communicated from host machine **402** to NVD **412** has an associated tag **426** that identifies a specific tenant and associated VM. On the NVD, for a packet **424** received from host machine **402**, the tag **426** associated with the packet is used to determine whether the packet is to be processed by VNIC-VM**1** **420** or by VNIC-VM**2** **422**. The packet is then processed by the corresponding VNIC. The configuration depicted in FIG. **4** enables each tenant's compute instance to believe that they own their own host machine and NIC. The setup depicted in FIG. **4** provides for I/O virtualization for supporting multi-tenancy.

[0139] FIG. **5** depicts a simplified block diagram of a physical network **500** according to certain embodiments. The embodiment depicted in FIG. **5** is structured as a Clos network. A Clos network is a particular type of network topology designed to provide connection redundancy while maintaining high bisection bandwidth and maximum resource utilization. A Clos network is a type of non-blocking, multistage or multi-tiered switching network, where the number of stages or tiers can be two, three, four, five, etc. The embodiment depicted in FIG. **5** is a 3-tiered network comprising tiers **1**, **2**, and **3**. The TOR switches **504** represent Tier-**0** switches in the Clos network. One or more NVDs are connected to the TOR switches. Tier-**0** switches are also referred to as edge devices of the physical network. The Tier-**0** switches are connected to Tier-**1** switches, which are also referred to as leaf switches. In the embodiment depicted in FIG. **5**, a set of "n" Tier-**0** TOR switches are connected to a set of "n" Tier-**1** switches and together form a pod. Each Tier-**0** switch in a pod is interconnected to all the Tier-**1** switches in the pod, but there is no connectivity of switches between pods. In certain implementations, two pods are referred to as a block. Each block is served by or connected to a set of "n" Tier-**2** switches (sometimes referred to as spine switches). There can be several blocks in the physical network topology. The Tier-**2** switches are in turn connected to "n" Tier-**3** switches (sometimes referred to as super-spine switches). Communication of packets over physical network **500** is typically performed using one or more Layer-3 communication protocols. Typically, all the layers of the physical network, except for the TORs layer are n-ways redundant thus allowing for high availability. Policies may be specified for pods and blocks to control the visibility of switches to each other in the physical network so as to enable scaling of the physical network.

[0140] A feature of a Clos network is that the maximum hop count to reach from one Tier-**0** switch to another Tier-**0** switch (or from an NVD connected to a Tier-**0**-switch to another NVD connected to a Tier-**0** switch) is fixed. For example, in a 3-Tiered Clos network at most seven hops are needed for a packet to reach from one NVD to another NVD, where the source and target NVDs are connected to the leaf tier of the Clos network. Likewise, in a 4-tiered Clos network, at most nine hops are needed for a packet to reach from one NVD to another NVD, where the source and target NVDs are connected to the leaf tier of the Clos network. Thus, a Clos network architecture maintains consistent latency throughout the network, which is important for communication within and between data centers. A Clos topology scales horizontally and is cost effective. The bandwidth/throughput capacity of the network can be easily increased by adding more switches at the various tiers (e.g., more leaf and spine switches) and by increasing the number of links between the switches at adjacent tiers.

[0141] In certain embodiments, each resource within CSPI is assigned a unique identifier called a Cloud Identifier (CID). This identifier is included as part of the resource's information and can be used to manage the resource, for example, via a Console or through APIs. An example syntax for a CID is:

[0142] ocid1.<RESOURCE TYPE>.<REALM>.[REGION][.FUTURE USE].<UNIQUE ID>

where,

ocid1: The literal string indicating the version of the CID;

resource type: The type of resource (for example, instance, volume, VCN, subnet, user, group, and so on);

realm: The realm the resource is in. Example values are "c1" for the commercial realm, "c2" for the Government Cloud realm, or "c3" for the Federal Government Cloud realm, etc. Each realm may have its own domain name;

region: The region the resource is in. If the region is not applicable to the resource, this part might be blank;

future use: Reserved for future use.

unique ID: The unique portion of the ID. The format may vary depending on the type of resource or service.

Multi-Cloud Introduction

[0143] FIG. **6** depicts a simplified high-level diagram of a distributed environment **600** comprising multiple cloud environments provided by different cloud service providers (CSPs) wherein the cloud environments include a particular cloud environment that provides specialized infrastructure that enables one or more cloud services provided by that particular cloud environment to be used by customers of other cloud environments according to certain embodiments. As depicted in FIG. **6**, various different cloud environments (also referred to as "clouds") may be provided by different cloud service providers (CSPs), each cloud environment or cloud offering one or more cloud services that can be

subscribed to by one or more customers of that cloud environment. The set of cloud services offered by a cloud environment provided by a CSP may include one or more different types of cloud services including but not restricted to Software-as-a-Service (SaaS) services, Infrastructure-as-a-Service (IaaS) services, Platform-as-a-Service (PaaS) services, Database-as-a-Service (DBaaS) services, and others. Examples of cloud environments provided by various CSPs include Oracle® Cloud Infrastructure (OCI) provided by Oracle Corporation, Microsoft® Azure provided by Microsoft Corporation, Google Cloud™ provided by Google LLC, Amazon Web Services (AWS®) provided by Amazon Corporation, and others. The cloud services offered by a particular cloud environment may be different from the set of cloud services offered by another cloud environment.

[0144] In a typical cloud environment, a CSP provides cloud service infrastructure (CSPI) that is used to provide the one or more cloud services that are offered by that cloud environment to its customers. The CSPI provided by a CSP may include various types of hardware and software resources including compute resources, memory resources, networking resources, consoles for accessing the cloud services, and others. A customer of a cloud environment provided by a CSP may subscribe to one or more of the cloud services offered by that cloud environment. Various subscription models may be offered by the CSP to its customers. After a customer subscribes to a cloud service provided by a cloud environment, one or more users may be associated with the subscribing customer and these users can use the cloud service subscribed to by the customer. In certain implementations, when a customer subscribes to a cloud service provided by a particular cloud environment, a customer account or customer tenancy is created for that customer. One or more users can then be associated with the customer tenancy and these users can then use the services subscribed to by the customer under the customer tenancy. Information regarding the services subscribed to by a customer, the users associated with the customer tenancy, etc. is usually stored within the cloud environment and associated with the customer tenancy.

[0145] For example, three different cloud environments provided by three different CSPs are depicted in FIG. **6**. These include a Cloud Environment A (cloud A) **610** provided by a CSP A, a Cloud Environment B (cloud B) **640** provided by a CSP B, and a Cloud Environment C (cloud C) **660** provided by a CSP C. Cloud A **610** includes infrastructure CSPI_A **612** provided by CSP A, and this infrastructure may be used to provide a set of services "Services A" **614** offered by cloud A **610**. One or more customers (e.g., Cust_A**1** **616-1**, Cust_A**2** **616-2**) may subscribe to one or more services from Services A **614** provided by cloud A **610**. One or more users **618-1** may be associated with Customer A**1** **616-1** and can use the services subscribed to by customer A**1** **616-1** in cloud A **610**. In a similar manner, one or more users **618-2** may be associated with customer A**2** **616-2** and can use the services subscribed to by customer A**2** **616-2** in cloud A **610**. In various use cases, the services subscribed to by customer A**1** **616-1** may be different from the services subscribed to by customer A**2** **616-2**.

[0146] As depicted in FIG. **6**, cloud B **640** includes infrastructure CSPI_B **642** provided by CSP B, and this infrastructure may be used to provide a set of services "Services B" **644** offered by cloud B **640**. One or more customers (e.g., Cust_B**1** **646-1**) may subscribe to one or more services from Services B **644**. One or more users **648-1** may be associated with Customer B**1** **646-1** and can use the services subscribed to by customer B**1** **646-1** in cloud B **640**.

[0147] As depicted in FIG. **6**, cloud C **660** includes infrastructure CSPI_C **662** provided by CSP C, and this infrastructure may be used to provide a set of services "Services C" **664** offered by cloud C **660**. One or more customers (e.g., Cust_C**1** **666-1**) may subscribe to one or more services from Services C **664**. One or more users **668-1** may be associated with Customer C**1** **666-1** and can use the services subscribed to by customer C**1** **666-1** in cloud C **660**. It is to be noted that Services A **614**, Services B **644**, and Services C **664** can be different from each other.

[0148] In existing cloud implementations, each cloud provides a closed ecosystem for its subscribing customers and associated users. As a result, a customer of a cloud environment and it associated users are restricted to using the services offered by the cloud that the customer subscribes to. For example, customer B**1** **646-1** and its users **648-1** are restricted to using services B **644** provided by cloud B **640** and cannot use their account in cloud B **640** to access services from a different cloud environment, such as a services from services A **614** offered by cloud A **610** or a service from Services C **664** offered by cloud C **660**. The teachings described herein overcome this limitation. As described in this disclosure, various techniques are described that enable a link to be created between two cloud environments that enables a service provided by a first cloud environment provided by a first CSP to be used by a customer (and associated users) of a second different cloud environment provided by a second different CSP, using the customer's account in the second cloud environment.

[0149] For example, in the embodiment depicted in FIG. **6**, infrastructure CSPI_A **612** provided by CSP A, in addition to other infrastructure **620**, includes special infrastructure **622** (referred to as multi-cloud enabling infrastructure **622** or MEI **622** or multi-cloud infrastructure **622**) that enables one or more services **614** offered by cloud A to be used by customers and associated users of other clouds, such as clouds B **640** and C **660**, using the customer accounts in those other clouds. In certain implementations, customers of clouds B and C do not have to open separate accounts with cloud A to use one or more of services **614** offered by cloud A **610**. A customer B**1** **646-1** of cloud B **640** and an associated user **648-1** can use their customer account or tenancy in cloud B **640** to use one or more services **614** provided by cloud A **610**. As another example, a customer C**1** **666-1** of cloud C **660** and an associated user **668-1** can use their customer account or tenancy in cloud C **660** to use one or more services **614** provided by cloud A **610**.

[0150] In certain implementations, MEI **622** enables links to be created between cloud A **610** and other clouds, where these links can be used by customers of the other clouds and their associated users to access and make use of services provided by cloud A **610**. This is symbolically shown in FIG. **6** as a link **670** created between cloud A **610** and cloud B **640**, and a link **672** created between cloud A **610** and cloud C **660**. Via link **670**, a customer of cloud B **640** can access or use one or more services **614** provided by cloud A **610**. Likewise, via link **672**, a customer of cloud C **660** can access or use one or more services **614** provided by cloud A **610**.

[0151] There are different ways in which MEI **612** may be implemented. In certain embodiments, MEI **612** may include components that enable links to be established with

different clouds. For example, in FIG. **6**, MEI **622** includes an infrastructure component **624** that is responsible for enabling link **670** with cloud B **640**, and an infrastructure component **626** for enabling link **672** with cloud C **660**. In a similar manner, MEI **622** may include other components that enable and facilitate links with other clouds. In some implementations, a component of MEI **622** may also facilitate links with multiple different clouds.

[0152] There are several reasons why a customer of one cloud may want or desire to use a cloud service provided by a different cloud. Using FIG. **6** as an example, there are multiple reasons why a customer B**1** **646-1** of cloud B **640** may want to use a cloud service **614** provided by cloud A **610**. In one use case scenario, this may happen because cloud A **610** offers a cloud service with functionality that is not provided by cloud B **640**. As another use case scenario, clouds A and B may offer a similar service, but the service provided by cloud A **610** may be better (e.g., more features/functionality, faster, etc.) that the corresponding service offered by cloud B **640**. As yet another use case scenario, customer B**1** **646-1** of cloud B **640** may want to use a cloud service provided by cloud A **610** because the service is provided at a cheaper price point than by cloud B **640**. In some cases, there may be geographical restrictions or other reasons why customer B**1** **646-1** of cloud B **640** might want to use a cloud service provided by cloud A **610**. For example, cloud A **610** may offer the desired service in a geographical area that is not serviced by cloud B **640**, or the particular service is not provided by cloud B **640** in a geographical area in which the customer desires the service. Several other use case scenarios are also possible as to why a customer of one cloud might want to use a service provided by a different cloud.

[0153] In certain embodiments, MEI **622** provides capabilities and performs functions for creating the link between cloud A **610** and another cloud, and via the link, enabling a user associated with a customer of the other cloud to, in a seamless manner, access and use, from the other cloud itself, a service provided by cloud A **610**. For example, MEI **622** enables a user **648-1** associated with customer B**1** **646-1** of cloud **640** to access a service from services A **614** provided by cloud A **610** in a seamless manner. In certain implementations, user interfaces (e.g., a console) may be provided that user **648-1** can access from within cloud B **640** that enable the user to see a list of services **614** offered by cloud A **610** and to select a particular service that the user **648-1** desires to access. In response to the user selection, MEI **622** is responsible for performing processing that establishes link **670** between clouds A and B to enable access to the requested service. The processing for setting up link **670** is performed substantially automatically by MEI **622**. Customer B**1** **646-1** or associated users **648-1** do not have worry about performing any system, networking, or other configuration changes that are needed to facilitate the creation, maintenance, and usage of link **670** between clouds A **610** and B **640**. No burden is placed on the users or the customers in the creation of the link between the clouds. The link is created in a fast and efficient manner using the techniques described in this disclosure.

[0154] MEI **622** may use various techniques to make the creation and use of the link seamless to users and customers and thus provide for an enhanced user experience. In certain implementations, MEI **622** causes the user interfaces (e.g., graphical user interfaces GUIs, etc.) and process flows that a customer B**1** and associated users **648-1** interact with, such as for requesting a service from cloud A **610** and for accessing the requested service from cloud A **610**, to be substantially similar to the interfaces and process flows that the customer/user would experience in cloud B **640**. In this manner, the customer or user, who may be accustomed to the interfaces and process flows of cloud B **640**, does not have to learn new interfaces and process flows to access a service **614** from cloud A **610**. MEI **622** may present different interfaces and process flows for users of different cloud environments. For example, a first set of user interfaces and process flows that are substantially similar to the user interfaces and flows of cloud B may be presented to a user from cloud B **640**, while a different set of user interfaces and process flows that are substantially similar to the user interfaces and flows of cloud C may be presented to a user accessing cloud A **610** from cloud C **660**. This is done to simplify and consequently enhance a user's experience for accessing services **614** of cloud A **610** from other clouds.

[0155] As another example, each cloud environment typically includes an identify management system that is configured to provide security for the cloud environment. The identity management system is configured to protect resources in the cloud environment, including resources provided by the CSP and resources of subscribing cloud customers that are deployed in the cloud environment. Functions performed by the identity management system include, for example, managing identity credentials (e.g., usernames, passwords, etc.) associated with the cloud's subscribing customers and associated users, using the identity credentials to regulate users' access to cloud resources and services based upon permission/access policies configured for the cloud environment, and other functions. Different clouds may use different identity management systems and associated techniques. For example, the identity management system and associated procedures in cloud A **610** may be completely different from the identity management system and associated procedures in cloud B **640**, which in turn may be completely different from the identity management system and associated procedures in cloud C **660**. In certain implementations, in spite of these differences in identity management systems and associated procedures between different cloud environments, the techniques described herein enable a user associated with a customer of a first cloud to access a cloud service provided by a different cloud using the same identity credentials associated with the customer and the user in the first cloud.

[0156] For example, in the embodiment depicted in FIG. **6**, cloud B **640** provided by CSP B may include an identity management system that assigns or allocates identity credentials to its subscribing customers and associated users, such as customer B**1** **646-1** and associated users **648-1**. These identity credentials are associated with the tenancy created for customer B**1** **646-1** in cloud B **640**. In certain implementations, MEI **622** provided by cloud A **610** enables a user **648-1** associated with cloud B customer B**1** **646-1** to access a service from services A **614** in cloud A **610** using identity credentials associated with users **648-1** and customer B**1** **646-1** in cloud B **640**. This greatly enhances the user experience for users **648-1** since they do not have to create new identity credentials that are specific to cloud A **610** just for the purpose of accessing a service **614** in cloud A **610**. The MEI **622** facilitates such access.

[0157] As an example, a customer B1 of cloud B **640** may select to use a service, such as a Database-as-a Service (DBaaS), from the set of services **614** provided by cloud A **610**. In response to such a selection, MEI **622** causes a link **670** to be automatically created between cloud A **610** and cloud B **640** to enable users **648-1** associated with customer B1 **646-1** to use the DBaaS service provided by cloud A **610**. The automatic setup of link **670** is facilitated by MEI **622**. After link **670** has been set up, a user **668-1** can use the DBaaS service in cloud A **610** via cloud B **640**. As part of using this service, user **668-1** can, via cloud B **640** send a request to cloud A **610** to create a database resource. In response, CSPI_A **612** may create the requested database in cloud A **610**. In certain implementations, the created database may be provisioned in a virtual network (e.g., a virtual cloud network or VCN) created for customer B1 in cloud A **610** and is accessible to user **668-1** via cloud B **640**. User **668-1** may then send, from cloud B **640**, requests to cloud A **610** to use the provisioned database. These requests may include, for example, requests to write data to the database, to update data stored in the database, to delete data in the database, to delete the database, to create additional databases, and the like. In some use cases, these requests may originate from a user **668-1** via cloud B **640** or from a service **644** provided by cloud B **640**. In this manner, MEI **622** provided by cloud A **610** enables a user associated with a customer of a different cloud provided by a different CSP to seamlessly access a service provided by cloud A **610**.

[0158] Distributed environment **600** depicted in FIG. **6** is merely an example and is not intended to unduly limit the scope of claimed embodiments. Many variations, alternatives, and modifications are possible. For example, in alternative embodiments, distributed environment **600** may have more or fewer cloud environments. The cloud environments may also have more or fewer systems and components or may have a different configuration or arrangement of the systems and components. The systems and components depicted in FIG. **6** may be implemented in software (e.g., code, instructions, program) executed by one or more processing units (e.g., processors, cores) of the respective systems, using hardware, or combinations thereof. The software may be stored on a non-transitory storage medium (e.g., on a memory device).

Multi Cloud Control Plane (MCCP)

[0159] FIG. **7** depicts a high-level architecture of a Multi-Cloud Control Plane (MCCP) according to some embodiments. As shown in FIG. **7**, the high-level architecture **700** includes a first cloud environment provided by a first cloud services provider (e.g., OCI) **720** and a second cloud environment provided by a second cloud services provider **710** (i.e., Azure). The first cloud environment **720** includes a first cloud infrastructure **720**A that provides users of the first cloud environment **720** with a plurality of services. Additionally, the first cloud environment **720** includes a multi-cloud infrastructure **720**B that provisions for capabilities to deliver services of the first cloud infrastructure **720**A (e.g., Oracle Cloud Infrastructure (OCI)) to users of other cloud environment (e.g., the second cloud infrastructure **710**A). The multi-cloud infrastructure **720**B allows users to access services (e.g., Oracle PaaS services) on other clouds with a user experience as close as possible to that of the native cloud environments of the users, while providing simple integration between the cloud environments.

[0160] The second cloud infrastructure **710**A includes a second cloud portal **711**, an active directory **712**, a resource manager **713**, a customer subscription **715**, a subscription of the first cloud provider **717**. The second cloud portal **711** is a centralized access point where customers of the second environment **710** can login and manage their cloud deployments and instances. It is noted that the second cloud portal may provide options for both monitoring and operating services provided by the second cloud infrastructure. The active directory **712** is a service provided by the second cloud infrastructure **710**A that that provides administrators with the ability to manage end-user identities and access privileges. Its services may include core directory, access management, and identity protection. The resource manager **713** is a deployment and management service of the second cloud infrastructure i.e., a management layer that provides users to perform operations (e.g., create, update, delete, etc.,) with respect to resources deployed in the customer subscription **715**. It is noted that the customer subscription may also be referred to as a virtual network (VNET) where customer applications are deployed and executed. The subscription of the first cloud provider **717** in the second cloud infrastructure **710**A includes an express route and a hub and spoke VNET that provision for network connections (e.g., from on-premises locations, from external cloud environments) to be established with the second cloud infrastructure **710**A. It is noted that such connections may not be routed through the public internet, thereby providing users with more reliability, faster speeds, consistent latency, and higher security.

[0161] The first cloud infrastructure **720**A includes a control plane **724**, a customer tenancy **726**, and a multi-cloud infrastructure **720**B. The control plane **724** of the first cloud infrastructure **720**A is a native control plane of the first cloud environment that provides management and orchestration across the cloud environment. It is here where configuration baselines are set, user and role access provisioned, and applications reside so they can be executed with related services. The multi-cloud infrastructure **720**B includes a multi-cloud platform data plane **722** and multi-cloud platform data plane **728**. As stated previously, the multi-cloud infrastructure **720**B provisions for users of other cloud environments (e.g., the second cloud environment **710**) to access services provided by the first cloud environment with a user experience as close as possible to that of the native cloud environments of the users (e.g., the second cloud environment **710**), while providing simple integration between the cloud environments.

[0162] The MCCP architecture of FIG. **7** further includes a multi-cloud console **721** (different than the second cloud portal **711**) that permits users authenticated in the second cloud infrastructure **710** to perform control plane operations on resources of the first cloud infrastructure **720** that are exposed via the multi-cloud infrastructure **720**B. In some implementations, as shown in FIG. **7**, all user **705** requests transmitted to the multi-cloud console **721** are directed to the multi-cloud infrastructure included in the first cloud environment. It is appreciated that the user **705** can transmit requests (e.g., CRUD requests) with respect to resources provided by the first cloud infrastructure directly to the multi-cloud console **721**. The multi-cloud console **721** is configured to process requests that have a syntax or format similar to that as used locally in the second cloud infrastructure. In other words, the multi-cloud console **721** has a

similar look-and-feel as well as uses terminology that is similar to the second cloud portal **711** included in the second cloud infrastructure **710**A. In some implementations, a link (e.g., a weblink) may be provided in the second cloud console **711** that directs users to the multi-cloud console **721**.

[0163] The multi-cloud infrastructure **720**B included in the first cloud infrastructure **720**A includes a plurality of microservices such as an authority module **722**A, a proxy module **722**B, a platform services module **722**C, a cloud-link adaptor **722**D, a pool of adaptors **722**E including adaptor **1**, adaptor **2**, adaptor **3**, and adaptor **4**, and a network link adaptor **722**F. The pool of adaptors **722**E can include adaptors such as an Exa-data cloud service adaptor, an autonomous database-shared adaptor, an autonomous database-dedicated adaptor, and a virtual machine database adaptor.

[0164] Each of the adaptors included in the pool of adaptors **722**E is responsible for exposing a set of unique underlying resources (provided by the first cloud infrastructure **720**A) to users of other cloud environments (e.g., second cloud environment). Specifically, each of the adaptors in the pool of adaptors **722**E maps to a particular product or resource offered by the first cloud infrastructure **720**A. It is noted that the actual resources are created by the native control plane **724** of the first cloud infrastructure. For instance, with respect to database as a service (DBaaS), the DBaaS control plane included in the control plane **724** is configured to instantiate Exa-database resources in the customer tenancy **726** of the first cloud environment.

[0165] The incoming request received by the multi-cloud infrastructure **720**B is processed by the authority module **722**A for performing authentication and access control. Each request includes a token associated with the account of the user in the second cloud infrastructure. The authority module extracts the token and validates the token in conjunction with the active directory **712** (i.e., the identity provider system of the second cloud infrastructure **710**A). Upon successful validation, the authority module **722**A may check roles (i.e., set of privileges) associated with the user. It is noted that a role may be associated with one or more tasks/operations that are permitted for the role. According to one embodiment, the authority module **722**A is responsible for authenticating incoming requests to MCCP and authorizing if the user is allowed to perform the requested operation based on the roles associated with the token. In some implementations, the authority module **722**A may perform the authentication process described above by taking advantage of a custom authentication feature of a service platform (i.e., SPLAT associated with the first cloud infrastructure). SPLAT accepts an incoming request and forwards it to the authority module **722**A, which further parse the incoming request to determine an authorization decision and returns a success or failure message back to SPLAT. On success, the request is passed by SPLAT to the routing proxy **722**B, whereas on failure, SPLAT returns an error response directly to the caller.

[0166] The proxy module **722**B (also referred to as a routing proxy module) included in the multi-cloud infrastructure **720**B is a component that receives an incoming request from the multi-cloud console **721** and routes the request to a particular adaptor included in the pool of adaptors **722**E. By one embodiment, the proxy module **722**B accepts pre-authenticated requests from a service platform (i.e., SPLAT) of the first cloud infrastructure and routes the requests to the appropriate adaptor based on path information included in the incoming request. In some implementations, the proxy module **722**B extracts an identifier (from the incoming request) corresponding to a provider of the service and routes the request to the appropriate adaptor in the pool of adaptors **722**E. For example, referring to an exemplary request depicted in FIG. **10**, it is noted that the service **1010** corresponds to an Exa-database infrastructure service. Thus, such a request is forwarded to a database adaptor included in the pool of adaptors **722**E.

[0167] The cloud-link adaptor **722**D included in the multi-cloud infrastructure **720**B is responsible for handling lifecycle operations of resources provided by the first cloud infrastructure. The cloud-link adaptor **722**D is configured to create a mapping (or a relationship created at a sign-up process) between an active directory tenant of the second cloud infrastructure (and its associated subscriptions) and a corresponding tenancy/account of the user in the first cloud infrastructure. In other words, the cloud-link adaptor **722**D generates a mapping of a first identifier associated with the tenancy of the user in the first cloud infrastructure to a second identifier associated with the account of the user in the second cloud infrastructure.

[0168] In some implementations, the cloud-link adaptor **722**D performs translation between external cloud identifiers (e.g., second identifier associated with the account of the user in the second cloud infrastructure) and a first identifier (associated with the tenancy of the user in the first cloud infrastructure) to enable operations going through the multi-cloud control plane **722** to map to the appropriate underlying resource in the first cloud infrastructure. In some embodiments, the cloud-link adaptor generates a data object to store the above-described mapping information. Additionally, the cloud-link adaptor **722**D also generates a resource-principal that is associated with the data object. The resource-principal is assigned one or more permissions based on the token (and associated roles thereof) included in the request. Access to downstream services provided by the first cloud infrastructure is achieved by the user from the second cloud infrastructure based on the resource-principal. The cloud-link adaptor **722**D may store the data object and the associated resource-principal in a root compartment of a tenancy of the user in the first cloud infrastructure. Alternatively, or additionally, the cloud-link adaptor **722**D may also locally persist the data object and the resource-principal on the platform services module **722**C of the multi-cloud infrastructure for seamless access by other adaptors included in the multi-cloud infrastructure.

[0169] The network link module (also referred to as a network adaptor) **722**F is responsible for creating a network link between the customer subscription **715** (in the second cloud infrastructure) and the corresponding customer tenancy/account (in the first cloud infrastructure) **726**. By some embodiments, the network link module **722**F obtains a token (from the platform services module **722**C) and creates (1) a first peering relationship (in the first cloud environment) between the multi-cloud platform data plane **728** and the customer tenancy **726**, and (2) a second peering relationship (in the second cloud environment) between the customer subscription **715** and the subscription of the first cloud services provider **717** included in the second cloud infrastructure.

[0170] The network link module **722**F is also configured to establish network connectivity between the first cloud

environment and the second cloud environment i.e., the network link module **722**F can configure an interconnect **719** to communicatively couple the two cloud environments. It is appreciated that upon forming the network link between the two cloud environments, applications that are executed in the customer's subscription (e.g., in a VNET of the second cloud infrastructure) are able to access resources e.g., Exa-database resource that is deployed in the customer tenancy **726** of the first cloud infrastructure. Further, as shown in FIG. **7**, within the tenancy **726**, there is provided a functionality of telemetry. Such a functionality relates to maintaining logs, metrics, and other performance parameters related to the resources deployed in the customer tenancy and their respective usages. According to some embodiments, MCCP mirrors the logs and metrics associated with different resources in the first cloud environment and publishes the metrics, logs, events etc., for instance in a dashboard (e.g., in an application insights module included in the customer subscription **715** of the second cloud environment) for further processing.

[0171] By some embodiments, the platform services module **722**C included in multi-cloud infrastructure is configured to store credentials associated with services of the first cloud infrastructure provided to the second cloud infrastructure. The platform services module **722**C provides, for instance, tokens/resource principals for the different adaptors included in the pool of adaptors **722**E so that the adaptors can communicate with native control plane **724** of the first cloud infrastructure. By some embodiments, the platform services module **722**C exposes APIs that are called by different adaptors to perform tasks such as:

[0172] Vending a minimally scoped access token (issued by the second cloud infrastructure) to adaptors. For example, the network adaptor **722**F requires an access token to perform the above-described network peering operations.

[0173] Providing a resource principal that adaptors will use to call downstream services to create resources in customer tenancies of the first cloud infrastructure.

[0174] Triggering replication of observability data (logs, metrics, events) from the first cloud infrastructure to the second cloud infrastructure.

[0175] As stated previously, the pool of adaptors includes a plurality of adaptors, each of which is responsible for exposing a set of unique underlying resources of the first cloud infrastructure to the users of the second cloud infrastructure i.e., each adaptor maps to a particular product or resource offered by the first cloud environment. For instance, the Exa-database adaptor acts as a proxy for the users of the second cloud infrastructure to create and utilize Exa-database resources. Exa-database is a pre-configured combination of hardware and software that provides an infrastructure for executing databases. By some embodiments, Exa-database comprises a stack of resources: (a) Exadata infrastructure (i.e., hardware), (b) VM cloud cluster, (c) container databases, and (d) pluggable databases. According to some embodiments, the multi-cloud infrastructure provides the ability (for users of the second cloud infrastructure) to analyze each of the levels of stacked infrastructure. Moreover, the MCCP provides flexibility for a user to simply issue a create command (via the multi-cloud console **721**) for a workflow, where after the MCCP performs automatic creation of individual resources at each level of the stack. It is appreciated that although the pool of adaptors **722**F as depicted in FIG. **7** includes four different adaptors, it is in no way limiting the scope of the MCCP architecture **700**. The MCCP architecture may include other adaptors, for example, a dedicated adaptor directed for use by a specific cloud service provider based on requirements of the cloud services provider.

[0176] FIGS. **8**A and **8**B depict exemplary flow diagrams for linking two user accounts in different cloud environments, according to some embodiments. The two user accounts may correspond to a first user account (e.g., tenancy) in a first cloud infrastructure and a second user account in a second cloud infrastructure. FIG. **8**A depicts the process of linking the two user accounts, wherein the tenancy of the user is initially created in the first cloud infrastructure and then linked to the account of the user in the second cloud infrastructure. FIG. **8**B depicts the process of linking the two user accounts, wherein the tenancy of the user in the first cloud infrastructure is already created i.e., the tenancy already exists.

[0177] FIG. **8**A depicts a data flow that is executed when a user representing a customer, such as a system administrator makes a call from the second cloud infrastructure to the multi-cloud infrastructure (included in the first cloud infrastructure) for signing up for services provided in the first cloud infrastructure. A special console (referred to herein as a multi-cloud console) may be provided for users of the second cloud infrastructure to open accounts within the first cloud infrastructure and to link the account of the user in the first cloud infrastructure to the account of the user in the second cloud infrastructure. It is noted that linking the accounts in the first and second cloud infrastructures, enables the user to utilize (from the second cloud infrastructure), one or more services provided by the first cloud infrastructure. In certain implementations, the user signs up for the services using the multi-cloud console. In response to the sign-up, a URL may be sent to the user that enables the user to log into the multi-cloud console. The multi-cloud console exposes UIs and APIs that are similar to the UIs and APIs of the second cloud infrastructure.

[0178] The multi-cloud console may provide various UIs (e.g., GUIs) that provide user-selectable options that enable a user of the second cloud infrastructure to open an account in the first cloud infrastructure and to further link the user accounts in the first and second cloud infrastructures. For example, multi-cloud console may provide a sign-up UI, which enables a user to create an account/tenancy in the first cloud infrastructure and to link the user's account (in the first cloud infrastructure) to the user's account in the second cloud infrastructure. Once the processing triggered responsive to the signup/link request is complete the user's accounts in the respective cloud infrastructures are linked together. As part of the processing, the multi-cloud console enables a user (e.g., a system administrator) to log into the second cloud infrastructure, and request: (a) creation of an account for the user (in the first cloud infrastructure) and to link the user's accounts; or (b) for an account that the user already has in the first cloud infrastructure, to request the user's first cloud infrastructure account to be linked to the user's second cloud infrastructure account.

[0179] Accordingly, in certain use cases, there are two possibilities: (a) the user already has an existing account or tenancy in the first cloud infrastructure and now, via the multi-cloud console sign-up UI, the user requests a link to be created between the user's accounts (details pertaining to

this processing is described next with reference to FIG. **8**B), or (b) the user requests both the creation of a new account in the first cloud infrastructure and the linking of the newly created account with the user's account in the second cloud infrastructure. Details pertaining to this processing is described next with reference to FIG. **8**A. It is appreciated that linking of the accounts enables a user to, via the second cloud, use resources in the first cloud. For example, via the second cloud, a user can request a resource to be created or provisioned in the first cloud, utilize and manage resources in the first cloud, delete resources in the first cloud, and the like.

[0180] As shown in FIG. **8**A, in step **1**, in response to a user's input provided to multi-cloud console (e.g., sign-up UI of the multi-cloud console) requesting a new account for the user to be created in the first cloud infrastructure and linked to the user's account in the second cloud infrastructure, a call is made by the multi-cloud console to accounts services (in the first cloud infrastructure) to create a new account. It is noted that the call includes a token that is generated by second cloud infrastructure. The token generated by the second cloud infrastructure and included in the call to the accounts services enables the account or tenancy created in the first cloud infrastructure to be linked to the user's account in the second cloud infrastructure.

[0181] At step **2**, as part of the processing for setting up the new account for the user, accounts service may make a call to the authority/proxy module included in the multi-cloud control plane (e.g., authority module **722**A included in the multi-cloud infrastructure of FIG. **7**) to validate the token. The authority/proxy module validates the token (as described previously with reference to FIG. **7**) and further processing may continue only upon successful validation of the token. Upon successful validation of the token, accounts service creates a new account for the user in the first cloud infrastructure. As part of creating the new account, a native user may be created and associated with the newly created account. However, note that this native user's credentials are not used. Rather, the user's identity in the second cloud infrastructure is used for managing the account and its resources (from the second cloud infrastructure) in the first cloud infrastructure.

[0182] After the new account has been successfully created by accounts services in the first cloud infrastructure, at step **3**, accounts services makes a call to the cloud-link adaptor (included in the multi-cloud infrastructure) to create a link (also referred to as a cloud-link) between the user's account in the second cloud infrastructure and the newly created account in the first cloud infrastructure. In certain implementations, the cloud-link adaptor exposes APIs to account services and to multi-cloud console. These APIs may be called by account services (or by the multi-cloud console) to request linking of the accounts. It is noted that in some implementations, there is no token included in the call of step **3**, since the call requesting the linkage is not made by the user but is rather initiated by accounts services. In this case, cloud-link adaptor does not do another authentication that would require another token because it relies upon accounts services having already performed the necessary authentication for the user as part of the processing for setting up the account using the token received in step **1**.

[0183] In some implementations, the processing performed in step **3** by the cloud-link adaptor for linking the two accounts comprises:

[0184] (a) cloud-link adaptor creates a data object (also referred to herein as a cloud-link resource object for storing metadata information identifying the two accounts being linked. For example, the data object stores metadata information including a mapping of a first identifier associated with the tenancy (i.e., account) created in the first cloud infrastructure and a second identifier associated with the account of the user with the second cloud service provider.

[0185] (b) cloud-link adaptor creates a new compartment for storing and containing resources on the first cloud infrastructure side that the user can/would manage using the multi-cloud console. In some implementations, the cloud-link resource object is created at the root of the customer's account in the first cloud infrastructure.

[0186] (c) cloud-link adaptor creates a new resource-principal (referred to herein as a cloud-link resource principal) for a resource that is desired to be used by the user of the second cloud infrastructure.

[0187] (d) cloud-link adaptor may perform one or more federation setups that facilitate linking of a domain in the first cloud infrastructure to an active directory (e.g., Active Directory **712** of the second cloud infrastructure as shown in FIG. **7**). The process of federating accounts of the first cloud infrastructure and the second cloud infrastructure allows users/groups of users in the second cloud infrastructure to be authenticated in first cloud infrastructure, and users/groups from the first cloud infrastructure to be authenticated into the second cloud infrastructure.

[0188] In certain implementations, permissions are associated with the cloud-link resource principal based upon the user's credentials/token in the account of the second cloud infrastructure. Consent for setting up the resource principal is provided by the user when the user requests a new account using the multi-cloud console or requests the user's account in the first cloud infrastructure to be linked to the user's account in the second cloud infrastructure. Further, as shown in step **4**, the cloud-link resource principal is transmitted to the downstream service to enable the user to utilize the downstream service(s) (e.g., one or more services provided by the first cloud infrastructure) from the second cloud infrastructure.

[0189] Turning to FIG. **8**B, there is depicted processing related to linking an existing account or tenancy in the first cloud infrastructure to an account of the user in the second cloud infrastructure. As shown in FIG. **8**B, the user, via the sign-up UI provided by the multi-cloud console, requests the user's accounts in the first cloud infrastructure and the second cloud infrastructure to be linked. In response, in step **1**, the multi-cloud console makes a call to the cloud-link adaptor to link the accounts. Such a call may be made using one of the APIs exposed by the cloud-link adaptor to the sign-up UI. In certain implementations, the information passed to the cloud-link adaptor in step **1**, includes information identifying the user's account in the second cloud infrastructure and also the user's account in the first cloud infrastructure, a token issued by the second cloud infrastructure, etc.

[0190] At step **2**, the cloud-link adaptor makes a call to the authority/proxy module included in the multi-cloud infrastructure to authenticate the token received in step **1**. As part of this authentication, the authority/proxy module determines whether the user making the request has sufficient authority on the second cloud infrastructure side to make the linkage request. As part of the validation, roles and permis-

sions set up on the second cloud infrastructure side may be checked. In response to the user being successfully validated, the cloud-link adaptor retrieves from the data object previously created for the user, the resource-principal associated with a resource that is desired to be utilized by the user. Further, as shown in step **3**, the cloud-link resource principal is transmitted to the downstream service to enable the user to utilize the downstream service(s) (e.g., one or more services provided by the first cloud infrastructure) from the second cloud infrastructure.

[0191] FIG. **9** depicts an exemplary system diagram illustrating components of a multi-cloud control plane (MCCP) according to some embodiments. The MCCP **900** includes a service platform (SPLAT) **910**, a routing proxy **915**, a cloud-link adaptor **920**, a database adaptor **925**, a network adaptor **930**, and an MCCP platform **935**. Upon the user successfully completing the sign-up process as described above with reference to FIGS. **8**A and **8**B, the user may utilize the multi-cloud console **905** to issue commands to access, create, or update a resource in the tenancy of the user in the first cloud infrastructure. For sake of illustration, in what follows, there is described a scenario of the user utilizing the multi-cloud console to issue a request to create an Exa-database resource.

[0192] In some implementations, the user accesses the multi-cloud console **905** and provides login information e.g., credentials of the user in the second cloud infrastructure. The multi-cloud console **905** provides a plurality of options e.g., create a resource, access a resource, update a resource etc. Such options may be provided to the user in the form of selectable icons (e.g., buttons) in the multi-cloud console **905**. Upon the user performing a selection (e.g., to create a resource), an API call is triggered to the service platform **910**. It is appreciated that the request made to the service platform **910** is not a native call with respect to the first cloud infrastructure. Rather, the call is a REST type call including an authorization header that comprises a token associated with the user in the second cloud infrastructure.

[0193] The REST call including the token is further forwarded to the routing proxy module **915** that performs authentication and access control operations. According to some embodiments, the routing proxy module **915** performs an authentication operation by extracting the token included in the REST call. The routing proxy module **915** validates the token by comparing a signature (used to sign the request) with a publicly available signature of the second cloud infrastructure to ensure that the request originates from a valid customer associated with the second cloud infrastructure. Additionally, the routing proxy module **915** may also check roles i.e., privileges associated with the token e.g., whether the role corresponds to an Exadata DB administrator or the like. Based on the role, the routing proxy module **915** may route the request to an appropriate adaptor included in the MCCP framework **900**.

[0194] According to one embodiment, the routing proxy module **915** compares the role (associated with the token) to a preconfigured list of roles that is published and assigned (as part of the API specification) for each of the adaptors. For example, if the role associated with the token corresponds to an 'Exadata DB administrator', then the request may be comprehended as one being of creating an Exa-database and thus the request is forwarded to the database adaptor **925**. Additionally, by some embodiments, the routing proxy module **915** may analyze information included in the REST call such as a provider ID, resource type requested, etc., and based on the analyzed information, the routing proxy module **915** may forward the request to the appropriate adaptor.

[0195] In some implementations, the request obtained by the routing proxy module **915** may not include information identifying the tenancy of the user in the first cloud infrastructure where the resource is to be deployed. Thus, the routing proxy module **915** communicates with the cloud-link adaptor **920** to obtain mapping information of the user's account in the second cloud infrastructure to the tenancy of the user in the first cloud infrastructure. If the mapping information exists, then the routing proxy module **915** obtains the information pertaining to the tenancy of the user in the first cloud infrastructure and passes the information to the database adaptor **925**. In this manner, the database adaptor **925** is aware of the tenancy of the user in the first cloud infrastructure where the resource is to be created/deployed. However, if the cloud-link adaptor **920** determines that no mapping information exists, then the routing proxy module **915** may simply issue, as a response to the request to create the database resource, an 'unauthorized-access' message that is transmitted back to the user.

[0196] It is noted that in some implementations, the cloud-link adaptor **920** creates a data object (referred to herein as a cloud-link resource object) for storing metadata information identifying the two accounts being linked. For example, the data object stores metadata information including a mapping of a first identifier associated with the tenancy (i.e., account) in the first cloud infrastructure and a second identifier associated with the account of the user with the second cloud service provider. Additionally, the cloud-link adaptor **920** also creates a resource-principal (referred to herein as a cloud-link resource principal) for a resource (e.g., database) that is desired to be created/managed by the user of the second cloud infrastructure. The cloud-link adaptor **920** may maintain the data object as well as the resource-principal within a root compartment of the tenancy of the user in the first cloud infrastructure. In some embodiments, the cloud-link adaptor **920** may also locally persist the data object and/or the resource principal in the MCCP platform **935**.

[0197] In some embodiments, the database adaptor **925** may communicate with (or instruct) the network adaptor **930** to create a network link between the user's account in the second cloud infrastructure and the tenancy of the user in the first cloud infrastructure. For instance, the network adaptor **930** may obtain from the native services in the second cloud infrastructure module **945**, a token associated with the user and create: (1) a first peering relationship (in the first cloud environment) between a data plane of the MCCP and the tenancy of the user in the first cloud infrastructure, and (2) a second peering relationship (in the second cloud environment) between the user's account and a subscription of the first cloud provider included in the second cloud infrastructure.

[0198] The network adaptor **930** is also configured to establish network connectivity between the first cloud infrastructure and the second cloud infrastructure i.e., the network adaptor **930** can configure an interconnect (e.g., interconnect **719** of FIG. **7**) that communicatively couples the two cloud environments. It is appreciated that upon forming the network link between the tenancy of the user in the first cloud infrastructure and the account of the user in the second cloud infrastructure, applications that are executed in the

user's subscription/account are able to access resources e.g., Exa-database deployed in the tenancy of the first cloud infrastructure. Furthermore, the creation of the peering relationships provisions for metrics e.g., database usage metrics to be accessible in the second cloud infrastructure e.g., in a dashboard application that is executed in the subscription of the user in the second cloud infrastructure.

[0199] In some implementations, the database adaptor **925** may obtain the resource principal that is locally persisted in the MCCP platform **935**. The database adaptor **925** may transmit a request (including the resource-principal) to one or more downstream services included in the first cloud infrastructure **940** to create the resources in the tenancy of the user in the first cloud infrastructure. In other words, the downstream services included in the first cloud infrastructure **940** utilizes the identity i.e., resource principal obtained from the MCCP platform **935** to create/deploy the required resources e.g., Exa-database in the tenancy of the user in the first cloud infrastructure. Upon the user issuing the request to create the Exa-database, the user may intermittently poll the MCCP **900** to obtain a status of the request. Upon the downstream services of the first cloud infrastructure **940** creating the resource in the tenancy of the user in the first cloud infrastructure, and the network adaptor **930** establishing the peering relationships, the MCCP **900** may notify the user regarding a successful completion of the request.

[0200] FIG. **10** depicts an exemplary request received by a multi-cloud infrastructure, according to some embodiments. Specifically, FIG. **10** depicts a request **1000** that received by the multi-cloud infrastructure from the multi-cloud console. The request **1000** includes metadata information required by the multi-cloud infrastructure to create a resource in a tenancy of the user in the first cloud infrastructure. The metadata information may include: (a) information identifying a subscription (e.g., an account) of the user (as well as a resource group information) in the second cloud infrastructure **1005**, (b) information identifying a provider of the service **1010**, and (c) a type of resource **1015** that is desired to be utilized by the user of the second cloud infrastructure.

[0201] In some implementations, the request **1000** is received by the proxy module (e.g., proxy **722**B of FIG. **7**) of the multi-cloud infrastructure. Upon receiving the request (e.g., request to create an Exa-database as shown in FIG. **10**), the proxy module may validate the user based on a token generated by the second cloud infrastructure as described previously. Upon successful validation, in some implementations, the proxy module passes the information obtained in the request to a corresponding adaptor (e.g., corresponding to the requested service) included in the pool of adaptors included in the multi-cloud infrastructure. For example, the request **1000** of FIG. **10** may be directed by the proxy module to a database adaptor included in the multi-cloud infrastructure. In turn, the database adaptor upon receiving the request may make a call to the cloud-link adaptor of the multi-cloud infrastructure in order to obtain mapping information related to mapping between the account of the user in the second cloud infrastructure to the tenancy associated with the user in the first cloud infrastructure.

[0202] It is noted that if the mapping information does not exist, the cloud-link adaptor rejects the user's request **1000**. In contrast, if the mapping information exists, the cloud-link adaptor provides the mapping information (as well as the resource-principal associated with the resource) to the database adaptor, whereafter, the database adaptor issues a request to the downstream service e.g., database-as-a-service (DBaaS), to execute the request.

[0203] FIG. **11** illustrates an exemplary flowchart depicting steps performed by a multi-cloud infrastructure, according to certain embodiments. The processing depicted in FIG. **11** may be implemented in software (e.g., code, instructions, program) executed by one or more processing units (e.g., processors, cores) of the respective systems, hardware, or combinations thereof. The software may be stored on a non-transitory storage medium (e.g., on a memory device). The method presented in FIG. **11** and described below is intended to be illustrative and non-limiting. Although FIG. **11** depicts the various processing steps occurring in a particular sequence or order, this is not intended to be limiting. In certain alternative embodiments, the steps may be performed in some different order or some steps may also be performed in parallel.

[0204] The process commences in step **1105**, where a first cloud services provider provides, using a first cloud infrastructure, a set of more of more cloud services. In step **1110**, a multi-cloud infrastructure is provided within the first cloud infrastructure. The multi-cloud infrastructure enables a user associated with an account with a second cloud services provider to use, from a second cloud infrastructure, a first service from the set of one or more cloud services. In other words, the multi-cloud infrastructure forms a gateway for users of other cloud services providers to utilize the one or more cloud services provided by the first cloud infrastructure from their native cloud environments. It is appreciated that the first service may correspond to creating and utilizing a database resource that is deployed in the first cloud infrastructure (e.g., in a tenancy associated with the user and created in the first cloud infrastructure).

[0205] The process then moves to step **1115**, where the multi-cloud infrastructure creates a link between the account (of the user) with the second cloud services provider and a tenancy created in the first cloud infrastructure for enabling the user to use the first service. In some implementations, the multi-cloud infrastructure generates a data object that stores metadata information corresponding to the link. The metadata information may include a mapping of a first identifier associated with the tenancy created in the first cloud infrastructure and a second identifier associated with the account (of the user) with the second cloud services provider.

Examples of Cloud Infrastructure

[0206] As noted above, infrastructure as a service (IaaS) is one particular type of cloud computing. IaaS can be configured to provide virtualized computing resources over a public network (e.g., the Internet). In an IaaS model, a cloud computing provider can host the infrastructure components (e.g., servers, storage devices, network nodes (e.g., hardware), deployment software, platform virtualization (e.g., a hypervisor layer), or the like). In some cases, an IaaS provider may also supply a variety of services to accompany those infrastructure components (e.g., billing, monitoring, logging, security, load balancing and clustering, etc.). Thus, as these services may be policy-driven, IaaS users may be able to implement policies to drive load balancing to maintain application availability and performance.

[0207] In some instances, IaaS customers may access resources and services through a wide area network (WAN),

such as the Internet, and can use the cloud provider's services to install the remaining elements of an application stack. For example, the user can log in to the IaaS platform to create virtual machines (VMs), install operating systems (OSs) on each VM, deploy middleware such as databases, create storage buckets for workloads and backups, and even install enterprise software into that VM. Customers can then use the provider's services to perform various functions, including balancing network traffic, troubleshooting application issues, monitoring performance, managing disaster recovery, etc.

[0208] In most cases, a cloud computing model will require the participation of a cloud provider. The cloud provider may, but need not be, a third-party service that specializes in providing (e.g., offering, renting, selling) IaaS. An entity might also opt to deploy a private cloud, becoming its own provider of infrastructure services.

[0209] In some examples, IaaS deployment is the process of putting a new application, or a new version of an application, onto a prepared application server or the like. It may also include the process of preparing the server (e.g., installing libraries, daemons, etc.). This is often managed by the cloud provider, below the hypervisor layer (e.g., the servers, storage, network hardware, and virtualization). Thus, the customer may be responsible for handling (OS), middleware, and/or application deployment (e.g., on self-service virtual machines (e.g., that can be spun up on demand) or the like.

[0210] In some examples, IaaS provisioning may refer to acquiring computers or virtual hosts for use, and even installing needed libraries or services on them. In most cases, deployment does not include provisioning, and the provisioning may need to be performed first.

[0211] In some cases, there are two different challenges for IaaS provisioning. First, there is the initial challenge of provisioning the initial set of infrastructure before anything is running. Second, there is the challenge of evolving the existing infrastructure (e.g., adding new services, changing services, removing services, etc.) once everything has been provisioned. In some cases, these two challenges may be addressed by enabling the configuration of the infrastructure to be defined declaratively. In other words, the infrastructure (e.g., what components are needed and how they interact) can be defined by one or more configuration files. Thus, the overall topology of the infrastructure (e.g., what resources depend on which, and how they each work together) can be described declaratively. In some instances, once the topology is defined, a workflow can be generated that creates and/or manages the different components described in the configuration files.

[0212] In some examples, an infrastructure may have many interconnected elements. For example, there may be one or more virtual private clouds (VPCs) (e.g., a potentially on-demand pool of configurable and/or shared computing resources), also known as a core network. In some examples, there may also be one or more security group rules provisioned to define how the security of the network will be set up and one or more virtual machines (VMs). Other infrastructure elements may also be provisioned, such as a load balancer, a database, or the like. As more and more infrastructure elements are desired and/or added, the infrastructure may incrementally evolve.

[0213] In some instances, continuous deployment techniques may be employed to enable deployment of infrastructure code across various virtual computing environments. Additionally, the described techniques can enable infrastructure management within these environments. In some examples, service teams can write code that is desired to be deployed to one or more, but often many, different production environments (e.g., across various different geographic locations, sometimes spanning the entire world). However, in some examples, the infrastructure on which the code will be deployed must first be set up. In some instances, the provisioning can be done manually, a provisioning tool may be utilized to provision the resources, and/or deployment tools may be utilized to deploy the code once the infrastructure is provisioned.

[0214] FIG. **12** is a block diagram **1200** illustrating an example pattern of an IaaS architecture, according to at least one embodiment. Service operators **1202** can be communicatively coupled to a secure host tenancy **1204** that can include a virtual cloud network (VCN) **1206** and a secure host subnet **1208**. In some examples, the service operators **1202** may be using one or more client computing devices, which may be portable handheld devices (e.g., an iPhone®, cellular telephone, an iPad®, computing tablet, a personal digital assistant (PDA)) or wearable devices (e.g., a Google Glass® head mounted display), running software such as Microsoft Windows Mobile®, and/or a variety of mobile operating systems such as iOS, Windows Phone, Android, BlackBerry 8, Palm OS, and the like, and being Internet, e-mail, short message service (SMS), Blackberry®, or other communication protocol enabled. Alternatively, the client computing devices can be general purpose personal computers including, by way of example, personal computers and/or laptop computers running various versions of Microsoft Windows®, Apple Macintosh®, and/or Linux operating systems. The client computing devices can be workstation computers running any of a variety of commercially available UNIX® or UNIX-like operating systems, including without limitation the variety of GNU/Linux operating systems, such as for example, Google Chrome OS. Alternatively, or in addition, client computing devices may be any other electronic device, such as a thin-client computer, an Internet-enabled gaming system (e.g., a Microsoft Xbox gaming console with or without a Kinect® gesture input device), and/or a personal messaging device, capable of communicating over a network that can access the VCN **1206** and/or the Internet.

[0215] The VCN **1206** can include a local peering gateway (LPG) **1210** that can be communicatively coupled to a secure shell (SSH) VCN **1212** via an LPG **1210** contained in the SSH VCN **1212**. The SSH VCN **1212** can include an SSH subnet **1214**, and the SSH VCN **1212** can be communicatively coupled to a control plane VCN **1216** via the LPG **1210** contained in the control plane VCN **1216**. Also, the SSH VCN **1212** can be communicatively coupled to a data plane VCN **1218** via an LPG **1210**. The control plane VCN **1216** and the data plane VCN **1218** can be contained in a service tenancy **1219** that can be owned and/or operated by the IaaS provider.

[0216] The control plane VCN **1216** can include a control plane demilitarized zone (DMZ) tier **1220** that acts as a perimeter network (e.g., portions of a corporate network between the corporate intranet and external networks). The DMZ-based servers may have restricted responsibilities and help keep security breaches contained. Additionally, the DMZ tier **1220** can include one or more load balancer (LB)

subnet(s) **1222**, a control plane app tier **1224** that can include app subnet(s) **1226**, a control plane data tier **1228** that can include database (DB) subnet(s) **1230** (e.g., frontend DB subnet(s) and/or backend DB subnet(s)). The LB subnet(s) **1222** contained in the control plane DMZ tier **1220** can be communicatively coupled to the app subnet(s) **1226** contained in the control plane app tier **1224** and an Internet gateway **1234** that can be contained in the control plane VCN **1216**, and the app subnet(s) **1226** can be communicatively coupled to the DB subnet(s) **1230** contained in the control plane data tier **1228** and a service gateway **1236** and a network address translation (NAT) gateway **1238**. The control plane VCN **1216** can include the service gateway **1236** and the NAT gateway **1238**.

[0217] The control plane VCN **1216** can include a data plane mirror app tier **1240** that can include app subnet(s) **1226**. The app subnet(s) **1226** contained in the data plane mirror app tier **1240** can include a virtual network interface controller (VNIC) **1242** that can execute a compute instance **1244**. The compute instance **1244** can communicatively couple the app subnet(s) **1226** of the data plane mirror app tier **1240** to app subnet(s) **1226** that can be contained in a data plane app tier **1246**.

[0218] The data plane VCN **1218** can include the data plane app tier **1246**, a data plane DMZ tier **1248**, and a data plane data tier **1250**. The data plane DMZ tier **1248** can include LB subnet(s) **1222** that can be communicatively coupled to the app subnet(s) **1226** of the data plane app tier **1246** and the Internet gateway **1234** of the data plane VCN **1218**. The app subnet(s) **1226** can be communicatively coupled to the service gateway **1236** of the data plane VCN **1218** and the NAT gateway **1238** of the data plane VCN **1218**. The data plane data tier **1250** can also include the DB subnet(s) **1230** that can be communicatively coupled to the app subnet(s) **1226** of the data plane app tier **1246**.

[0219] The Internet gateway **1234** of the control plane VCN **1216** and of the data plane VCN **1218** can be communicatively coupled to a metadata management service **1252** that can be communicatively coupled to public Internet **1254**. Public Internet **1254** can be communicatively coupled to the NAT gateway **1238** of the control plane VCN **1216** and of the data plane VCN **1218**. The service gateway **1236** of the control plane VCN **1216** and of the data plane VCN **1218** can be communicatively couple to cloud services **1256**.

[0220] In some examples, the service gateway **1236** of the control plane VCN **1216** or of the data plane VCN **1218** can make application programming interface (API) calls to cloud services **1256** without going through public Internet **1254**. The API calls to cloud services **1256** from the service gateway **1236** can be one-way: the service gateway **1236** can make API calls to cloud services **1256**, and cloud services **1256** can send requested data to the service gateway **1236**. But, cloud services **1256** may not initiate API calls to the service gateway **1236**.

[0221] In some examples, the secure host tenancy **1204** can be directly connected to the service tenancy **1219**, which may be otherwise isolated. The secure host subnet **1208** can communicate with the SSH subnet **1214** through an LPG **1210** that may enable two-way communication over an otherwise isolated system. Connecting the secure host subnet **1208** to the SSH subnet **1214** may give the secure host subnet **1208** access to other entities within the service tenancy **1219**.

[0222] The control plane VCN **1216** may allow users of the service tenancy **1219** to set up or otherwise provision desired resources. Desired resources provisioned in the control plane VCN **1216** may be deployed or otherwise used in the data plane VCN **1218**. In some examples, the control plane VCN **1216** can be isolated from the data plane VCN **1218**, and the data plane mirror app tier **1240** of the control plane VCN **1216** can communicate with the data plane app tier **1246** of the data plane VCN **1218** via VNICs **1242** that can be contained in the data plane mirror app tier **1240** and the data plane app tier **1246**.

[0223] In some examples, users of the system, or customers, can make requests, for example create, read, update, or delete (CRUD) operations, through public Internet **1254** that can communicate the requests to the metadata management service **1252**. The metadata management service **1252** can communicate the request to the control plane VCN **1216** through the Internet gateway **1234**. The request can be received by the LB subnet(s) **1222** contained in the control plane DMZ tier **1220**. The LB subnet(s) **1222** may determine that the request is valid, and in response to this determination, the LB subnet(s) **1222** can transmit the request to app subnet(s) **1226** contained in the control plane app tier **1224**. If the request is validated and requires a call to public Internet **1254**, the call to public Internet **1254** may be transmitted to the NAT gateway **1238** that can make the call to public Internet **1254**. Memory that may be desired to be stored by the request can be stored in the DB subnet(s) **1230**.

[0224] In some examples, the data plane mirror app tier **1240** can facilitate direct communication between the control plane VCN **1216** and the data plane VCN **1218**. For example, changes, updates, or other suitable modifications to configuration may be desired to be applied to the resources contained in the data plane VCN **1218**. Via a VNIC **1242**, the control plane VCN **1216** can directly communicate with, and can thereby execute the changes, updates, or other suitable modifications to configuration to, resources contained in the data plane VCN **1218**.

[0225] In some embodiments, the control plane VCN **1216** and the data plane VCN **1218** can be contained in the service tenancy **1219**. In this case, the user, or the customer, of the system may not own or operate either the control plane VCN **1216** or the data plane VCN **1218**. Instead, the IaaS provider may own or operate the control plane VCN **1216** and the data plane VCN **1218**, both of which may be contained in the service tenancy **1219**. This embodiment can enable isolation of networks that may prevent users or customers from interacting with other users', or other customers', resources. Also, this embodiment may allow users or customers of the system to store databases privately without needing to rely on public Internet **1254**, which may not have a desired level of security, for storage.

[0226] In other embodiments, the LB subnet(s) **1222** contained in the control plane VCN **1216** can be configured to receive a signal from the service gateway **1236**. In this embodiment, the control plane VCN **1216** and the data plane VCN **1218** may be configured to be called by a customer of the IaaS provider without calling public Internet **1254**. Customers of the IaaS provider may desire this embodiment since database(s) that the customers use may be controlled by the IaaS provider and may be stored on the service tenancy **1219**, which may be isolated from public Internet **1254**.

[0227] FIG. **13** is a block diagram **1300** illustrating another example pattern of an IaaS architecture, according to at least one embodiment. Service operators **1302** (e.g., service operators **1202** of FIG. **12**) can be communicatively coupled to a secure host tenancy **1304** (e.g., the secure host tenancy **1204** of FIG. **12**) that can include a virtual cloud network (VCN) **1306** (e.g., the VCN **1206** of FIG. **12**) and a secure host subnet **1308** (e.g., the secure host subnet **1208** of FIG. **12**). The VCN **1306** can include a local peering gateway (LPG) **1310** (e.g., the LPG **1210** of FIG. **12**) that can be communicatively coupled to a secure shell (SSH) VCN **1312** (e.g., the SSH VCN **1212** of FIG. **12**) via an LPG **1310** contained in the SSH VCN **1312**. The SSH VCN **1312** can include an SSH subnet **1314** (e.g., the SSH subnet **1214** of FIG. **12**), and the SSH VCN **1312** can be communicatively coupled to a control plane VCN **1316** (e.g., the control plane VCN **1216** of FIG. **12**) via an LPG **1310** contained in the control plane VCN **1316**. The control plane VCN **1316** can be contained in a service tenancy **1319** (e.g., the service tenancy **1219** of FIG. **12**), and the data plane VCN **1318** (e.g., the data plane VCN **1218** of FIG. **12**) can be contained in a customer tenancy **1321** that may be owned or operated by users, or customers, of the system.

[0228] The control plane VCN **1316** can include a control plane DMZ tier **1320** (e.g. the control plane DMZ tier **1220** of FIG. **12**) that can include LB subnet(s) **1322** (e.g. LB subnet(s) **1222** of FIG. **12**), a control plane app tier **1324** (e.g. the control plane app tier **1224** of FIG. **12**) that can include app subnet(s) **1326** (e.g. app subnet(s) **1226** of FIG. **12**), a control plane data tier **1328** (e.g. the control plane data tier **1228** of FIG. **12**) that can include database (DB) subnet(s) **1330** (e.g. similar to DB subnet(s) **1230** of FIG. **12**). The LB subnet(s) **1322** contained in the control plane DMZ tier **1320** can be communicatively coupled to the app subnet(s) **1326** contained in the control plane app tier **1324** and an Internet gateway **1334** (e.g. the Internet gateway **1234** of FIG. **12**) that can be contained in the control plane VCN **1316**, and the app subnet(s) **1326** can be communicatively coupled to the DB subnet(s) **1330** contained in the control plane data tier **1328** and a service gateway **1336** (e.g. the service gateway of FIG. **12**) and a network address translation (NAT) gateway **1338** (e.g. the NAT gateway **1238** of FIG. **12**). The control plane VCN **1316** can include the service gateway **1336** and the NAT gateway **1338**.

[0229] The control plane VCN **1316** can include a data plane mirror app tier **1340** (e.g., the data plane mirror app tier **1240** of FIG. **12**) that can include app subnet(s) **1326**. The app subnet(s) **1326** contained in the data plane mirror app tier **1340** can include a virtual network interface controller (VNIC) **1342** (e.g., the VNIC of **1242**) that can execute a compute instance **1344** (e.g., similar to the compute instance **1244** of FIG. **12**). The compute instance **1344** can facilitate communication between the app subnet(s) **1326** of the data plane mirror app tier **1340** and the app subnet(s) **1326** that can be contained in a data plane app tier **1346** (e.g., the data plane app tier **1246** of FIG. **12**) via the VNIC **1342** contained in the data plane mirror app tier **1340** and the VNIC **1342** contained in the data plane app tier **1346**.

[0230] The Internet gateway **1334** contained in the control plane VCN **1316** can be communicatively coupled to a metadata management service **1352** (e.g., the metadata management service **1252** of FIG. **12**) that can be communicatively coupled to public Internet **1354** (e.g., public Internet **1254** of FIG. **12**). Public Internet **1354** can be communicatively coupled to the NAT gateway **1338** contained in the control plane VCN **1316**. The service gateway **1336** contained in the control plane VCN **1316** can be communicatively couple to cloud services **1356** (e.g., cloud services **1256** of FIG. **12**).

[0231] In some examples, the data plane VCN **1318** can be contained in the customer tenancy **1321**. In this case, the IaaS provider may provide the control plane VCN **1316** for each customer, and the IaaS provider may, for each customer, set up a unique compute instance **1344** that is contained in the service tenancy **1319**. Each compute instance **1344** may allow communication between the control plane VCN **1316**, contained in the service tenancy **1319**, and the data plane VCN **1318** that is contained in the customer tenancy **1321**. The compute instance **1344** may allow resources, which are provisioned in the control plane VCN **1316** that is contained in the service tenancy **1319**, to be deployed or otherwise used in the data plane VCN **1318** that is contained in the customer tenancy **1321**.

[0232] In other examples, the customer of the IaaS provider may have databases that live in the customer tenancy **1321**. In this example, the control plane VCN **1316** can include the data plane mirror app tier **1340** that can include app subnet(s) **1326**. The data plane mirror app tier **1340** can reside in the data plane VCN **1318**, but the data plane mirror app tier **1340** may not live in the data plane VCN **1318**. That is, the data plane mirror app tier **1340** may have access to the customer tenancy **1321**, but the data plane mirror app tier **1340** may not exist in the data plane VCN **1318** or be owned or operated by the customer of the IaaS provider. The data plane mirror app tier **1340** may be configured to make calls to the data plane VCN **1318** but may not be configured to make calls to any entity contained in the control plane VCN **1316**. The customer may desire to deploy or otherwise use resources in the data plane VCN **1318** that are provisioned in the control plane VCN **1316**, and the data plane mirror app tier **1340** can facilitate the desired deployment, or other usage of resources, of the customer.

[0233] In some embodiments, the customer of the IaaS provider can apply filters to the data plane VCN **1318**. In this embodiment, the customer can determine what the data plane VCN **1318** can access, and the customer may restrict access to public Internet **1354** from the data plane VCN **1318**. The IaaS provider may not be able to apply filters or otherwise control access of the data plane VCN **1318** to any outside networks or databases. Applying filters and controls by the customer onto the data plane VCN **1318**, contained in the customer tenancy **1321**, can help isolate the data plane VCN **1318** from other customers and from public Internet **1354**.

[0234] In some embodiments, cloud services **1356** can be called by the service gateway **1336** to access services that may not exist on public Internet **1354**, on the control plane VCN **1316**, or on the data plane VCN **1318**. The connection between cloud services **1356** and the control plane VCN **1316** or the data plane VCN **1318** may not be live or continuous. Cloud services **1356** may exist on a different network owned or operated by the IaaS provider. Cloud services **1356** may be configured to receive calls from the service gateway **1336** and may be configured to not receive calls from public Internet **1354**. Some cloud services **1356** may be isolated from other cloud services **1356**, and the control plane VCN **1316** may be isolated from cloud ser-

vices **1356** that may not be in the same region as the control plane VCN **1316**. For example, the control plane VCN **1316** may be located in "Region **1**," and cloud service "Deployment **12**," may be located in Region **1** and in "Region **2**." If a call to Deployment **12** is made by the service gateway **1336** contained in the control plane VCN **1316** located in Region **1**, the call may be transmitted to Deployment **12** in Region **1**. In this example, the control plane VCN **1316**, or Deployment **12** in Region **1**, may not be communicatively coupled to, or otherwise in communication with, Deployment **12** in Region **2**.

[0235] FIG. **14** is a block diagram **1400** illustrating another example pattern of an IaaS architecture, according to at least one embodiment. Service operators **1402** (e.g., service operators **1202** of FIG. **12**) can be communicatively coupled to a secure host tenancy **1404** (e.g., the secure host tenancy **1204** of FIG. **12**) that can include a virtual cloud network (VCN) **1406** (e.g., the VCN **1206** of FIG. **12**) and a secure host subnet **1408** (e.g., the secure host subnet **1208** of FIG. **12**). The VCN **1406** can include an LPG **1410** (e.g., the LPG **1210** of FIG. **12**) that can be communicatively coupled to an SSH VCN **1412** (e.g., the SSH VCN **1212** of FIG. **12**) via an LPG **1410** contained in the SSH VCN **1412**. The SSH VCN **1412** can include an SSH subnet **1414** (e.g., the SSH subnet **1214** of FIG. **12**), and the SSH VCN **1412** can be communicatively coupled to a control plane VCN **1416** (e.g. the control plane VCN **1216** of FIG. **12**) via an LPG **1410** contained in the control plane VCN **1416** and to a data plane VCN **1418** (e.g. the data plane **1218** of FIG. **12**) via an LPG **1410** contained in the data plane VCN **1418**. The control plane VCN **1416** and the data plane VCN **1418** can be contained in a service tenancy **1419** (e.g., the service tenancy **1219** of FIG. **12**).

[0236] The control plane VCN **1416** can include a control plane DMZ tier **1420** (e.g. the control plane DMZ tier **1220** of FIG. **12**) that can include load balancer (LB) subnet(s) **1422** (e.g. LB subnet(s) **1222** of FIG. **12**), a control plane app tier **1424** (e.g. the control plane app tier **1224** of FIG. **12**) that can include app subnet(s) **1426** (e.g. similar to app subnet(s) **1226** of FIG. **12**), a control plane data tier **1428** (e.g. the control plane data tier **1228** of FIG. **12**) that can include DB subnet(s) **1430**. The LB subnet(s) **1422** contained in the control plane DMZ tier **1420** can be communicatively coupled to the app subnet(s) **1426** contained in the control plane app tier **1424** and to an Internet gateway **1434** (e.g. the Internet gateway **1234** of FIG. **12**) that can be contained in the control plane VCN **1416**, and the app subnet(s) **1426** can be communicatively coupled to the DB subnet(s) **1430** contained in the control plane data tier **1428** and to a service gateway **1436** (e.g. the service gateway of FIG. **12**) and a network address translation (NAT) gateway **1438** (e.g. the NAT gateway **1238** of FIG. **12**). The control plane VCN **1416** can include the service gateway **1436** and the NAT gateway **1438**.

[0237] The data plane VCN **1418** can include a data plane app tier **1446** (e.g., the data plane app tier **1246** of FIG. **12**), a data plane DMZ tier **1448** (e.g., the data plane DMZ tier **1248** of FIG. **12**), and a data plane data tier **1450** (e.g., the data plane data tier **1250** of FIG. **12**). The data plane DMZ tier **1448** can include LB subnet(s) **1422** that can be communicatively coupled to trusted app subnet(s) **1460** and untrusted app subnet(s) **1462** of the data plane app tier **1446** and the Internet gateway **1434** contained in the data plane VCN **1418**. The trusted app subnet(s) **1460** can be communicatively coupled to the service gateway **1436** contained in the data plane VCN **1418**, the NAT gateway **1438** contained in the data plane VCN **1418**, and DB subnet(s) **1430** contained in the data plane data tier **1450**. The untrusted app subnet(s) **1462** can be communicatively coupled to the service gateway **1436** contained in the data plane VCN **1418** and DB subnet(s) **1430** contained in the data plane data tier **1450**. The data plane data tier **1450** can include DB subnet(s) **1430** that can be communicatively coupled to the service gateway **1436** contained in the data plane VCN **1418**.

[0238] The untrusted app subnet(s) **1462** can include one or more primary VNICs **1464**(**1**)-(N) that can be communicatively coupled to tenant virtual machines (VMs) **1466**(**1**)-(N). Each tenant VM **1466**(**1**)-(N) can be communicatively coupled to a respective app subnet **1467**(**1**)-(N) that can be contained in respective container egress VCNs **1468**(**1**)-(N) that can be contained in respective customer tenancies **1470**(**1**)-(N). Respective secondary VNICs **1472**(**1**)-(N) can facilitate communication between the untrusted app subnet (s) **1462** contained in the data plane VCN **1418** and the app subnet contained in the container egress VCNs **1468**(**1**)-(N). Each container egress VCNs **1468**(**1**)-(N) can include a NAT gateway **1438** that can be communicatively coupled to public Internet **1454** (e.g., public Internet **1254** of FIG. **12**).

[0239] The Internet gateway **1434** contained in the control plane VCN **1416** and contained in the data plane VCN **1418** can be communicatively coupled to a metadata management service **1452** (e.g., the metadata management system **1252** of FIG. **12**) that can be communicatively coupled to public Internet **1454**. Public Internet **1454** can be communicatively coupled to the NAT gateway **1438** contained in the control plane VCN **1416** and contained in the data plane VCN **1418**. The service gateway **1436** contained in the control plane VCN **1416** and contained in the data plane VCN **1418** can be communicatively couple to cloud services **1456**.

[0240] In some embodiments, the data plane VCN **1418** can be integrated with customer tenancies **1470**. This integration can be useful or desirable for customers of the IaaS provider in some cases such as a case that may desire support when executing code. The customer may provide code to run that may be destructive, may communicate with other customer resources, or may otherwise cause undesirable effects. In response to this, the IaaS provider may determine whether to run code given to the IaaS provider by the customer.

[0241] In some examples, the customer of the IaaS provider may grant temporary network access to the IaaS provider and request a function to be attached to the data plane tier app **1446**. Code to run the function may be executed in the VMs **1466**(**1**)-(N), and the code may not be configured to run anywhere else on the data plane VCN **1418**. Each VM **1466**(**1**)-(N) may be connected to one customer tenancy **1470**. Respective containers **1471**(**1**)-(N) contained in the VMs **1466**(**1**)-(N) may be configured to run the code. In this case, there can be a dual isolation (e.g., the containers **1471**(**1**)-(N) running code, where the containers **1471**(**1**)-(N) may be contained in at least the VM **1466**(**1**)-(N) that are contained in the untrusted app subnet(s) **1462**), which may help prevent incorrect or otherwise undesirable code from damaging the network of the IaaS provider or from damaging a network of a different customer. The containers **1471**(**1**)-(N) may be communicatively coupled to the customer tenancy **1470** and may be configured to transmit or receive data from the customer tenancy **1470**. The

containers **1471**(**1**)-(N) may not be configured to transmit or receive data from any other entity in the data plane VCN **1418**. Upon completion of running the code, the IaaS provider may kill or otherwise dispose of the containers **1471**(**1**)-(N).

[0242] In some embodiments, the trusted app subnet(s) **1460** may run code that may be owned or operated by the IaaS provider. In this embodiment, the trusted app subnet(s) **1460** may be communicatively coupled to the DB subnet(s) **1430** and be configured to execute CRUD operations in the DB subnet(s) **1430**. The untrusted app subnet(s) **1462** may be communicatively coupled to the DB subnet(s) **1430**, but in this embodiment, the untrusted app subnet(s) may be configured to execute read operations in the DB subnet(s) **1430**. The containers **1471**(**1**)-(N) that can be contained in the VM **1466**(**1**)-(N) of each customer and that may run code from the customer may not be communicatively coupled with the DB subnet(s) **1430**.

[0243] In other embodiments, the control plane VCN **1416** and the data plane VCN **1418** may not be directly communicatively coupled. In this embodiment, there may be no direct communication between the control plane VCN **1416** and the data plane VCN **1418**. However, communication can occur indirectly through at least one method. An LPG **1410** may be established by the IaaS provider that can facilitate communication between the control plane VCN **1416** and the data plane VCN **1418**. In another example, the control plane VCN **1416** or the data plane VCN **1418** can make a call to cloud services **1456** via the service gateway **1436**. For example, a call to cloud services **1456** from the control plane VCN **1416** can include a request for a service that can communicate with the data plane VCN **1418**.

[0244] FIG. **15** is a block diagram **1500** illustrating another example pattern of an IaaS architecture, according to at least one embodiment. Service operators **1502** (e.g., service operators **1202** of FIG. **12**) can be communicatively coupled to a secure host tenancy **1504** (e.g., the secure host tenancy **1204** of FIG. **12**) that can include a virtual cloud network (VCN) **1506** (e.g., the VCN **1206** of FIG. **12**) and a secure host subnet **1508** (e.g., the secure host subnet **1208** of FIG. **12**). The VCN **1506** can include an LPG **1510** (e.g., the LPG **1210** of FIG. **12**) that can be communicatively coupled to an SSH VCN **1512** (e.g., the SSH VCN **1212** of FIG. **12**) via an LPG **1510** contained in the SSH VCN **1512**. The SSH VCN **1512** can include an SSH subnet **1514** (e.g., the SSH subnet **1214** of FIG. **12**), and the SSH VCN **1512** can be communicatively coupled to a control plane VCN **1516** (e.g. the control plane VCN **1216** of FIG. **12**) via an LPG **1510** contained in the control plane VCN **1516** and to a data plane VCN **1518** (e.g. the data plane **1218** of FIG. **12**) via an LPG **1510** contained in the data plane VCN **1518**. The control plane VCN **1516** and the data plane VCN **1518** can be contained in a service tenancy **1519** (e.g., the service tenancy **1219** of FIG. **12**).

[0245] The control plane VCN **1516** can include a control plane DMZ tier **1520** (e.g. the control plane DMZ tier **1220** of FIG. **12**) that can include LB subnet(s) **1522** (e.g. LB subnet(s) **1222** of FIG. **12**), a control plane app tier **1524** (e.g. the control plane app tier **1224** of FIG. **12**) that can include app subnet(s) **1526** (e.g. app subnet(s) **1226** of FIG. **12**), a control plane data tier **1528** (e.g. the control plane data tier **1228** of FIG. **12**) that can include DB subnet(s) **1530** (e.g. DB subnet(s) **1430** of FIG. **14**). The LB subnet(s) **1522** contained in the control plane DMZ tier **1520** can be communicatively coupled to the app subnet(s) **1526** contained in the control plane app tier **1524** and to an Internet gateway **1534** (e.g. the Internet gateway **1234** of FIG. **12**) that can be contained in the control plane VCN **1516**, and the app subnet(s) **1526** can be communicatively coupled to the DB subnet(s) **1530** contained in the control plane data tier **1528** and to a service gateway **1536** (e.g. the service gateway of FIG. **12**) and a network address translation (NAT) gateway **1538** (e.g. the NAT gateway **1238** of FIG. **12**). The control plane VCN **1516** can include the service gateway **1536** and the NAT gateway **1538**.

[0246] The data plane VCN **1518** can include a data plane app tier **1546** (e.g., the data plane app tier **1246** of FIG. **12**), a data plane DMZ tier **1548** (e.g., the data plane DMZ tier **1248** of FIG. **12**), and a data plane data tier **1550** (e.g., the data plane data tier **1250** of FIG. **12**). The data plane DMZ tier **1548** can include LB subnet(s) **1522** that can be communicatively coupled to trusted app subnet(s) **1560** (e.g., trusted app subnet(s) **1460** of FIG. **14**) and untrusted app subnet(s) **1562** (e.g. untrusted app subnet(s) **1462** of FIG. **14**) of the data plane app tier **1546** and the Internet gateway **1534** contained in the data plane VCN **1518**. The trusted app subnet(s) **1560** can be communicatively coupled to the service gateway **1536** contained in the data plane VCN **1518**, the NAT gateway **1538** contained in the data plane VCN **1518**, and DB subnet(s) **1530** contained in the data plane data tier **1550**. The untrusted app subnet(s) **1562** can be communicatively coupled to the service gateway **1536** contained in the data plane VCN **1518** and DB subnet(s) **1530** contained in the data plane data tier **1550**. The data plane data tier **1550** can include DB subnet(s) **1530** that can be communicatively coupled to the service gateway **1536** contained in the data plane VCN **1518**.

[0247] The untrusted app subnet(s) **1562** can include primary VNICs **1564**(**1**)-(N) that can be communicatively coupled to tenant virtual machines (VMs) **1566**(**1**)-(N) residing within the untrusted app subnet(s) **1562**. Each tenant VM **1566**(**1**)-(N) can run code in a respective container **1567**(**1**)-(N) and be communicatively coupled to an app subnet **1526** that can be contained in a data plane app tier **1546** that can be contained in a container egress VCN **1568**. Respective secondary VNICs **1572**(**1**)-(N) can facilitate communication between the untrusted app subnet(s) **1562** contained in the data plane VCN **1518** and the app subnet contained in the container egress VCN **1568**. The container egress VCN can include a NAT gateway **1538** that can be communicatively coupled to public Internet **1554** (e.g., public Internet **1254** of FIG. **12**).

[0248] The Internet gateway **1534** contained in the control plane VCN **1516** and contained in the data plane VCN **1518** can be communicatively coupled to a metadata management service **1552** (e.g., the metadata management system **1252** of FIG. **12**) that can be communicatively coupled to public Internet **1554**. Public Internet **1554** can be communicatively coupled to the NAT gateway **1538** contained in the control plane VCN **1516** and contained in the data plane VCN **1518**. The service gateway **1536** contained in the control plane VCN **1516** and contained in the data plane VCN **1518** can be communicatively couple to cloud services **1556**.

[0249] In some examples, the pattern illustrated by the architecture of block diagram **1500** of FIG. **15** may be considered an exception to the pattern illustrated by the architecture of block diagram **1400** of FIG. **14** and may be desirable for a customer of the IaaS provider if the IaaS

provider cannot directly communicate with the customer (e.g., a disconnected region). The respective containers **1567**(**1**)-(N) that are contained in the VMs **1566**(**1**)-(N) for each customer can be accessed in real-time by the customer. The containers **1567**(**1**)-(N) may be configured to make calls to respective secondary VNICs **1572**(**1**)-(N) contained in app subnet(s) **1526** of the data plane app tier **1546** that can be contained in the container egress VCN **1568**. The secondary VNICs **1572**(**1**)-(N) can transmit the calls to the NAT gateway **1538** that may transmit the calls to public Internet **1554**. In this example, the containers **1567**(**1**)-(N) that can be accessed in real-time by the customer can be isolated from the control plane VCN **1516** and can be isolated from other entities contained in the data plane VCN **1518**. The containers **1567**(**1**)-(N) may also be isolated from resources from other customers.

[0250] In other examples, the customer can use the containers **1567**(**1**)-(N) to call cloud services **1556**. In this example, the customer may run code in the containers **1567**(**1**)-(N) that requests a service from cloud services **1556**. The containers **1567**(**1**)-(N) can transmit this request to the secondary VNICs **1572**(**1**)-(N) that can transmit the request to the NAT gateway that can transmit the request to public Internet **1554**. Public Internet **1554** can transmit the request to LB subnet(s) **1522** contained in the control plane VCN **1516** via the Internet gateway **1534**. In response to determining the request is valid, the LB subnet(s) can transmit the request to app subnet(s) **1526** that can transmit the request to cloud services **1556** via the service gateway **1536**.

[0251] It should be appreciated that IaaS architectures **1200**, **1300**, **1400**, **1500** depicted in the figures may have other components than those depicted. Further, the embodiments shown in the figures are only some examples of a cloud infrastructure system that may incorporate an embodiment of the disclosure. In some other embodiments, the IaaS systems may have more or fewer components than shown in the figures, may combine two or more components, or may have a different configuration or arrangement of components.

[0252] In certain embodiments, the IaaS systems described herein may include a suite of applications, middleware, and database service offerings that are delivered to a customer in a self-service, subscription-based, elastically scalable, reliable, highly available, and secure manner. An example of such an IaaS system is the Oracle Cloud Infrastructure (OCI) provided by the present assignee.

[0253] FIG. **16** illustrates an example computer system **1600**, in which various embodiments may be implemented. The system **1600** may be used to implement any of the computer systems described above. As shown in the figure, computer system **1600** includes a processing unit **1604** that communicates with a number of peripheral subsystems via a bus subsystem **1602**. These peripheral subsystems may include a processing acceleration unit **1606**, and I/O subsystem **1608**, a storage subsystem **1618** and a communications subsystem **1624**. Storage subsystem **1618** includes tangible computer-readable storage media **1622** and a system memory **1610**.

[0254] Bus subsystem **1602** provides a mechanism for letting the various components and subsystems of computer system **1600** communicate with each other as intended. Although bus subsystem **1602** is shown schematically as a single bus, alternative embodiments of the bus subsystem may utilize multiple buses. Bus subsystem **1602** may be any of several types of bus structures including a memory bus or memory controller, a peripheral bus, and a local bus using any of a variety of bus architectures. For example, such architectures may include an Industry Standard Architecture (ISA) bus, Micro Channel Architecture (MCA) bus, Enhanced ISA (EISA) bus, Video Electronics Standards Association (VESA) local bus, and Peripheral Component Interconnect (PCI) bus, which can be implemented as a Mezzanine bus manufactured to the IEEE P1386.1 standard.

[0255] Processing unit **1604**, which can be implemented as one or more integrated circuits (e.g., a conventional microprocessor or microcontroller), controls the operation of computer system **1600**. One or more processors may be included in processing unit **1604**. These processors may include single core or multicore processors. In certain embodiments, processing unit **1604** may be implemented as one or more independent processing units **1632** and/or **1634** with single or multicore processors included in each processing unit. In other embodiments, processing unit **1604** may also be implemented as a quad-core processing unit formed by integrating two dual-core processors into a single chip.

[0256] In various embodiments, processing unit **1604** can execute a variety of programs in response to program code and can maintain multiple concurrently executing programs or processes. At any given time, some or all of the program code to be executed can be resident in processor(s) **1604** and/or in storage subsystem **1618**. Through suitable programming, processor(s) **1604** can provide various functionalities described above. Computer system **1600** may additionally include a processing acceleration unit **1606**, which can include a digital signal processor (DSP), a special-purpose processor, and/or the like.

[0257] I/O subsystem **1608** may include user interface input devices and user interface output devices. User interface input devices may include a keyboard, pointing devices such as a mouse or trackball, a touchpad or touch screen incorporated into a display, a scroll wheel, a click wheel, a dial, a button, a switch, a keypad, audio input devices with voice command recognition systems, microphones, and other types of input devices. User interface input devices may include, for example, motion sensing and/or gesture recognition devices such as the Microsoft Kinect® motion sensor that enables users to control and interact with an input device, such as the Microsoft Xbox® 360 game controller, through a natural user interface using gestures and spoken commands. User interface input devices may also include eye gesture recognition devices such as the Google Glass® blink detector that detects eye activity (e.g., 'blinking' while taking pictures and/or making a menu selection) from users and transforms the eye gestures as input into an input device (e.g., Google Glass®). Additionally, user interface input devices may include voice recognition sensing devices that enable users to interact with voice recognition systems (e.g., Siri® navigator), through voice commands.

[0258] User interface input devices may also include, without limitation, three dimensional (3D) mice, joysticks or pointing sticks, gamepads and graphic tablets, and audio/visual devices such as speakers, digital cameras, digital camcorders, portable media players, webcams, image scanners, fingerprint scanners, barcode reader 3D scanners, 3D printers, laser rangefinders, and eye gaze tracking devices. Additionally, user interface input devices may include, for

example, medical imaging input devices such as computed tomography, magnetic resonance imaging, position emission tomography, medical ultrasonography devices. User interface input devices may also include, for example, audio input devices such as MIDI keyboards, digital musical instruments and the like.

[0259] User interface output devices may include a display subsystem, indicator lights, or non-visual displays such as audio output devices, etc. The display subsystem may be a cathode ray tube (CRT), a flat-panel device, such as that using a liquid crystal display (LCD) or plasma display, a projection device, a touch screen, and the like. In general, use of the term "output device" is intended to include all possible types of devices and mechanisms for outputting information from computer system **1600** to a user or other computer. For example, user interface output devices may include, without limitation, a variety of display devices that visually convey text, graphics and audio/video information such as monitors, printers, speakers, headphones, automotive navigation systems, plotters, voice output devices, and modems.

[0260] Computer system **1600** may comprise a storage subsystem **1618** that comprises software elements, shown as being currently located within a system memory **1610**. System memory **1610** may store program instructions that are loadable and executable on processing unit **1604**, as well as data generated during the execution of these programs.

[0261] Depending on the configuration and type of computer system **1600**, system memory **1610** may be volatile (such as random-access memory (RAM)) and/or non-volatile (such as read-only memory (ROM), flash memory, etc.) The RAM typically contains data and/or program modules that are immediately accessible to and/or presently being operated and executed by processing unit **1604**. In some implementations, system memory **1610** may include multiple different types of memory, such as static random-access memory (SRAM) or dynamic random-access memory (DRAM). In some implementations, a basic input/output system (BIOS), containing the basic routines that help to transfer information between elements within computer system **1600**, such as during start-up, may typically be stored in the ROM. By way of example, and not limitation, system memory **1610** also illustrates application programs **1612**, which may include client applications, Web browsers, mid-tier applications, relational database management systems (RDBMS), etc., program data **1614**, and an operating system **1616**. By way of example, operating system **1616** may include various versions of Microsoft Windows®, Apple Macintosh®, and/or Linux operating systems, a variety of commercially available UNIX® or UNIX-like operating systems (including without limitation the variety of GNU/Linux operating systems, the Google Chrome® OS, and the like) and/or mobile operating systems such as iOS, Windows® Phone, Android® OS, BlackBerry® 16 OS, and Palm® OS operating systems.

[0262] Storage subsystem **1618** may also provide a tangible computer-readable storage medium for storing the basic programming and data constructs that provide the functionality of some embodiments. Software (programs, code modules, instructions) that when executed by a processor provide the functionality described above may be stored in storage subsystem **1618**. These software modules or instructions may be executed by processing unit **1604**. Storage subsystem **1618** may also provide a repository for storing data used in accordance with the present disclosure.

[0263] Storage subsystem **1600** may also include a computer-readable storage media reader **1620** that can further be connected to computer-readable storage media **1622**. Together and optionally, in combination with system memory **1610**, computer-readable storage media **1622** may comprehensively represent remote, local, fixed, and/or removable storage devices plus storage media for temporarily and/or more permanently containing, storing, transmitting, and retrieving computer-readable information.

[0264] Computer-readable storage media **1622** containing code, or portions of code, can also include any appropriate media known or used in the art, including storage media and communication media, such as but not limited to, volatile and non-volatile, removable and non-removable media implemented in any method or technology for storage and/or transmission of information. This can include tangible computer-readable storage media such as RAM, ROM, electronically erasable programmable ROM (EEPROM), flash memory or other memory technology, CD-ROM, digital versatile disk (DVD), or other optical storage, magnetic cassettes, magnetic tape, magnetic disk storage or other magnetic storage devices, or other tangible computer readable media. This can also include nontangible computer-readable media, such as data signals, data transmissions, or any other medium which can be used to transmit the desired information, and which can be accessed by computing system **1600**.

[0265] By way of example, computer-readable storage media **1622** may include a hard disk drive that reads from or writes to non-removable, nonvolatile magnetic media, a magnetic disk drive that reads from or writes to a removable, nonvolatile magnetic disk, and an optical disk drive that reads from or writes to a removable, nonvolatile optical disk such as a CD ROM, DVD, and Blu-Ray® disk, or other optical media. Computer-readable storage media **1622** may include, but is not limited to, Zip® drives, flash memory cards, universal serial bus (USB) flash drives, secure digital (SD) cards, DVD disks, digital video tape, and the like. Computer-readable storage media **1622** may also include, solid-state drives (SSD) based on non-volatile memory such as flash-memory based SSDs, enterprise flash drives, solid state ROM, and the like, SSDs based on volatile memory such as solid-state RAM, dynamic RAM, static RAM, DRAM-based SSDs, magneto resistive RAM (MRAM) SSDs, and hybrid SSDs that use a combination of DRAM and flash memory based SSDs. The disk drives and their associated computer-readable media may provide non-volatile storage of computer-readable instructions, data structures, program modules, and other data for computer system **1600**.

[0266] Communications subsystem **1624** provides an interface to other computer systems and networks. Communications subsystem **1624** serves as an interface for receiving data from and transmitting data to other systems from computer system **1600**. For example, communications subsystem **1624** may enable computer system **1600** to connect to one or more devices via the Internet. In some embodiments communications subsystem **1624** can include radio frequency (RF) transceiver components for accessing wireless voice and/or data networks (e.g., using cellular telephone technology, advanced data network technology, such as 3G, 4G or EDGE (enhanced data rates for global evolu-

tion), Wi-Fi (IEEE 802.11 family standards, or other mobile communication technologies, or any combination thereof), global positioning system (GPS) receiver components, and/or other components. In some embodiments communications subsystem **1624** can provide wired network connectivity (e.g., Ethernet) in addition to or instead of a wireless interface.

[0267] In some embodiments, communications subsystem **1624** may also receive input communication in the form of structured and/or unstructured data feeds **1626**, event streams **1628**, event updates **1630**, and the like on behalf of one or more users who may use computer system **1600**.

[0268] By way of example, communications subsystem **1624** may be configured to receive data feeds **1626** in real-time from users of social networks and/or other communication services such as Twitter® feeds, Facebook® updates, web feeds such as Rich Site Summary (RSS) feeds, and/or real-time updates from one or more third party information sources.

[0269] Additionally, communications subsystem **1624** may also be configured to receive data in the form of continuous data streams, which may include event streams **1628** of real-time events and/or event updates **1630** that may be continuous or unbounded in nature with no explicit end. Examples of applications that generate continuous data may include, for example, sensor data applications, financial tickers, network performance measuring tools (e.g., network monitoring and traffic management applications), click-stream analysis tools, automobile traffic monitoring, and the like.

[0270] Communications subsystem **1624** may also be configured to output the structured and/or unstructured data feeds **1626**, event streams **1628**, event updates **1630**, and the like to one or more databases that may be in communication with one or more streaming data source computers coupled to computer system **1600**.

[0271] Computer system **1600** can be one of various types, including a handheld portable device (e.g., an iPhone® cellular phone, an iPad® computing tablet, a PDA), a wearable device (e.g., a Google Glass® head mounted display), a PC, a workstation, a mainframe, a kiosk, a server rack, or any other data processing system.

[0272] Due to the ever-changing nature of computers and networks, the description of computer system **1600** depicted in the figure is intended only as a specific example. Many other configurations having more or fewer components than the system depicted in the figure are possible. For example, customized hardware might also be used and/or particular elements might be implemented in hardware, firmware, software (including applets), or a combination. Further, connection to other computing devices, such as network input/output devices, may be employed. Based on the disclosure and teachings provided herein, a person of ordinary skill in the art will appreciate other ways and/or methods to implement the various embodiments.

[0273] Although specific embodiments have been described, various modifications, alterations, alternative constructions, and equivalents are also encompassed within the scope of the disclosure. Embodiments are not restricted to operation within certain specific data processing environments but are free to operate within a plurality of data processing environments. Additionally, although embodiments have been described using a particular series of transactions and steps, it should be apparent to those skilled in the art that the scope of the present disclosure is not limited to the described series of transactions and steps. Various features and aspects of the above-described embodiments may be used individually or jointly.

[0274] Further, while embodiments have been described using a particular combination of hardware and software, it should be recognized that other combinations of hardware and software are also within the scope of the present disclosure. Embodiments may be implemented only in hardware, or only in software, or using combinations thereof. The various processes described herein can be implemented on the same processor or different processors in any combination. Accordingly, where components or modules are described as being configured to perform certain operations, such configuration can be accomplished, e.g., by designing electronic circuits to perform the operation, by programming programmable electronic circuits (such as microprocessors) to perform the operation, or any combination thereof. Processes can communicate using a variety of techniques including but not limited to conventional techniques for inter process communication, and different pairs of processes may use different techniques, or the same pair of processes may use different techniques at different times.

[0275] The specification and drawings are, accordingly, to be regarded in an illustrative rather than a restrictive sense. It will, however, be evident that additions, subtractions, deletions, and other modifications and changes may be made thereunto without departing from the broader spirit and scope as set forth in the claims. Thus, although specific disclosure embodiments have been described, these are not intended to be limiting. Various modifications and equivalents are within the scope of the following claims.

[0276] The use of the terms "a" and "an" and "the" and similar referents in the context of describing the disclosed embodiments (especially in the context of the following claims) are to be construed to cover both the singular and the plural, unless otherwise indicated herein or clearly contradicted by context. The terms "comprising," "having," "including," and "containing" are to be construed as open-ended terms (i.e., meaning "including, but not limited to,") unless otherwise noted. The term "connected" is to be construed as partly or wholly contained within, attached to, or joined together, even if there is something intervening. Recitation of ranges of values herein are merely intended to serve as a shorthand method of referring individually to each separate value falling within the range, unless otherwise indicated herein and each separate value is incorporated into the specification as if it were individually recited herein. All methods described herein can be performed in any suitable order unless otherwise indicated herein or otherwise clearly contradicted by context. The use of any and all examples, or exemplary language (e.g., "such as") provided herein, is intended merely to better illuminate embodiments and does not pose a limitation on the scope of the disclosure unless otherwise claimed. No language in the specification should be construed as indicating any non-claimed element as essential to the practice of the disclosure.

[0277] Disjunctive language such as the phrase "at least one of X, Y, or Z," unless specifically stated otherwise, is intended to be understood within the context as used in general to present that an item, term, etc., may be either X, Y, or Z, or any combination thereof (e.g., X, Y, and/or Z). Thus, such disjunctive language is not generally intended to,

and should not, imply that certain embodiments require at least one of X, at least one of Y, or at least one of Z to each be present.

[0278] Preferred embodiments of this disclosure are described herein, including the best mode known for carrying out the disclosure. Variations of those preferred embodiments may become apparent to those of ordinary skill in the art upon reading the foregoing description. Those of ordinary skill should be able to employ such variations as appropriate and the disclosure may be practiced otherwise than as specifically described herein. Accordingly, this disclosure includes all modifications and equivalents of the subject matter recited in the claims appended hereto as permitted by applicable law. Moreover, any combination of the above-described elements in all possible variations thereof is encompassed by the disclosure unless otherwise indicated herein.

[0279] All references, including publications, patent applications, and patents, cited herein are hereby incorporated by reference to the same extent as if each reference were individually and specifically indicated to be incorporated by reference and were set forth in its entirety herein. In the foregoing specification, aspects of the disclosure are described with reference to specific embodiments thereof, but those skilled in the art will recognize that the disclosure is not limited thereto. Various features and aspects of the above-described disclosure may be used individually or jointly. Further, embodiments can be utilized in any number of environments and applications beyond those described herein without departing from the broader spirit and scope of the specification. The specification and drawings are, accordingly, to be regarded as illustrative rather than restrictive.

What is claimed is:

1. A method comprising:

providing, using a first cloud infrastructure provided by a first cloud services provider, a set of one or more cloud services;

providing, within the first cloud infrastructure, a multi-cloud infrastructure that enables a user associated with an account with a second cloud services provider to use, from a second cloud infrastructure, a first service from the set of one or more cloud services; and

creating, using the multi-cloud infrastructure, a link between the account with the second cloud service provider and a tenancy created in the first cloud infrastructure for enabling using the first service by the user.

2. The method of claim **1**, wherein the first service corresponds to creating and utilizing a database resource that is deployed in the tenancy created in the first cloud infrastructure.

3. The method of claim **1**, wherein the multi-cloud infrastructure includes a multi-cloud control plane hosting a cloud-link adaptor, a network link adaptor, and a pool of adaptors, each of which corresponds to a specific service in the set of one or more cloud services provided by the first cloud services provider.

4. The method of claim **1**, further comprising:

receiving, by the multi-cloud infrastructure, a request to utilize the first service provided by the first cloud services provider, the request being forwarded to the multi-cloud infrastructure from a multi-cloud console, and wherein the request includes a token associated with the account of the user in the second cloud infrastructure.

5. The method of claim **4**, further comprising:

validating, by the multi-cloud infrastructure, the request to utilize the first service based on the token, the validating including determining a role associated with the user in the second cloud infrastructure.

6. The method of claim **5**, further comprising:

generating, by the multi-cloud infrastructure, a data object that stores metadata information corresponding to the link, the metadata information including a mapping of a first identifier associated with the tenancy created in the first cloud infrastructure and a second identifier associated with the account with the second cloud service provider.

7. The method of claim **6**, further comprising:

responsive to a successful validation, generating by the multi-cloud infrastructure, a resource principal to be associated with the data object.

8. The method of claim **7**, wherein a first adaptor included in a pool of adaptors and corresponding to the first service utilizes the resource principal to invoke the first service provided by the first cloud service provider.

9. The method of claim **1**, further comprising:

generating, by the multi-cloud infrastructure, a communication link that interconnects the tenancy in the first cloud infrastructure to a customer subscription including the account in the second cloud infrastructure, wherein metric information associated with a performance of a resource deployed in the first cloud infrastructure and corresponding to the first service, is transmitted via the communication link from the first cloud infrastructure to the second cloud infrastructure.

10. The method of claim **1**, wherein the first cloud infrastructure is different than the second cloud infrastructure.

11. The method of claim **3**, wherein the pool of adaptors includes:

an Exadata cloud service adaptor,

an autonomous database-shared adaptor,

an autonomous database-dedicated adaptor, and

a virtual machine database adaptor.

12. The method of claim **4**, wherein the multi-cloud console includes an interface that is similar to a user interface associated with a cloud portal of the second cloud services provider.

13. One or more computer readable non-transitory media storing computer-executable instructions that, when executed by one or more processors, cause:

providing, using a first cloud infrastructure provided by a first cloud services provider, a set of one or more cloud services;

providing, within the first cloud infrastructure, a multi-cloud infrastructure that enables a user associated with an account with a second cloud services provider to use, from a second cloud infrastructure, a first service from the set of one or more cloud services; and

creating, using the multi-cloud infrastructure, a link between the account with the second cloud service provider and a tenancy created in the first cloud infrastructure for enabling using the first service by the user.

14. The one or more computer readable non-transitory media storing computer-executable instructions of claim **13**,

wherein the first service corresponds to creating and utilizing a database resource that is deployed in the tenancy created in the first cloud infrastructure.

15. The one or more computer readable non-transitory media storing computer-executable instructions of claim **13**, wherein the multi-cloud infrastructure includes a multi-cloud control plane hosting a cloud-link adaptor, a network link adaptor, and a pool of adaptors, each of which corresponds to a specific service in the set of one or more cloud services provided by the first cloud services provider.

16. The one or more computer readable non-transitory media storing computer-executable instructions of claim **13**, further comprising instructions that, when executed by one or more processors, cause:

receiving, by the multi-cloud infrastructure, a request to utilize the first service provided by the first cloud services provider, the request being forwarded to the multi-cloud infrastructure from a multi-cloud console, and wherein the request includes a token associated with the account of the user in the second cloud infrastructure.

17. The one or more computer readable non-transitory media storing computer-executable instructions of claim **16**, further comprising instructions that, when executed by one or more processors, cause:

validating, by the multi-cloud infrastructure, the request to utilize the first service based on the token, the validating including determining a role associated with the user in the second cloud infrastructure.

18. The one or more computer readable non-transitory media storing computer-executable instructions of claim **17**, further comprising instructions that, when executed by one or more processors, cause:

generating, by the multi-cloud infrastructure, a data object that stores metadata information corresponding to the link, the metadata information including a mapping of a first identifier associated with the tenancy created in the first cloud infrastructure and a second identifier associated with the account with the second cloud service provider.

19. The one or more computer readable non-transitory media storing computer-executable instructions of claim **18**, further comprising instructions that, when executed by one or more processors, cause:

responsive to a successful validation, generating by the multi-cloud infrastructure, a resource principal to be associated with the data object, wherein a first adaptor included in a pool of adaptors and corresponding to the first service utilizes the resource principal to invoke the first service provided by the first cloud service provider.

20. A computing device comprising:

one or more processors; and

a memory including instructions that, when executed with the one or more processors, cause the computing device to, at least:

provide, using a first cloud infrastructure provided by a first cloud services provider, a set of one or more cloud services;

provide, within the first cloud infrastructure, a multi-cloud infrastructure that enables a user associated with an account with a second cloud services provider to use, from a second cloud infrastructure, a first service from the set of one or more cloud services; and

create, using the multi-cloud infrastructure, a link between the account with the second cloud service provider and a tenancy created in the first cloud infrastructure for enabling using the first service by the user.

* * * * *