Jan. 26, 1965 A. G. BODINE, JR 3,166,772

SONIC APPLICATOR FOR SURFACE CLEANING

Filed June 13, 1963 3 Sheets-Sheet 1

FIG. 1.

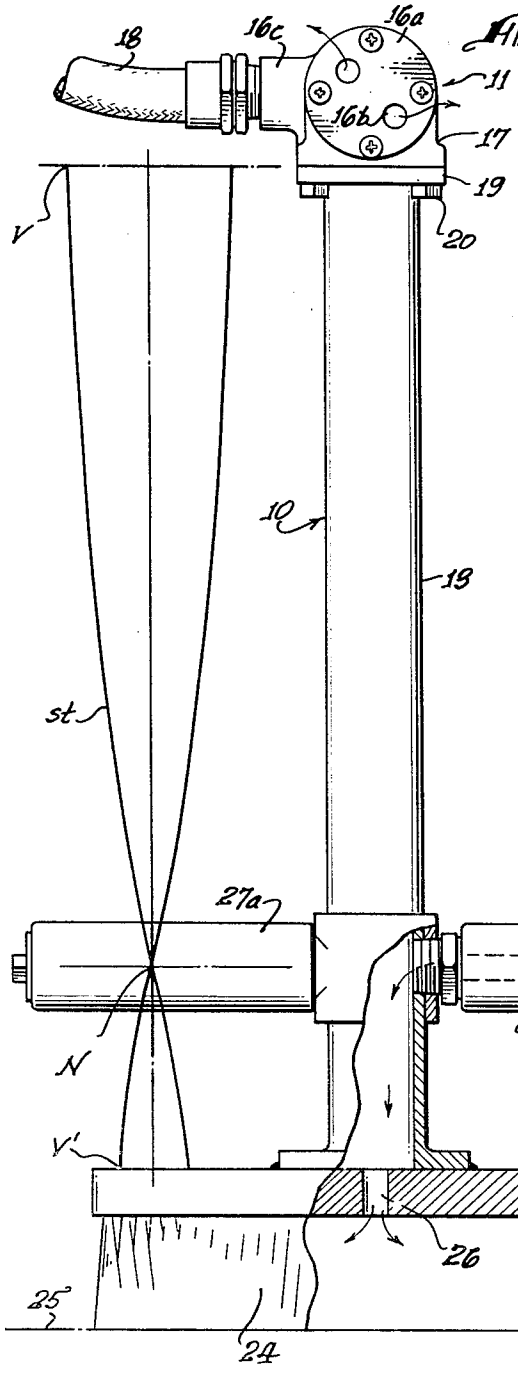

FIG. 3.

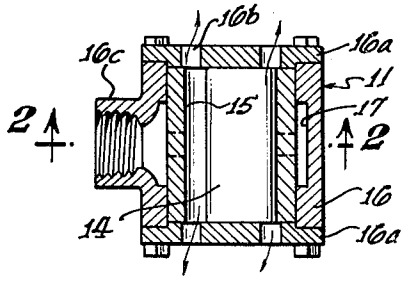

FIG. 2.

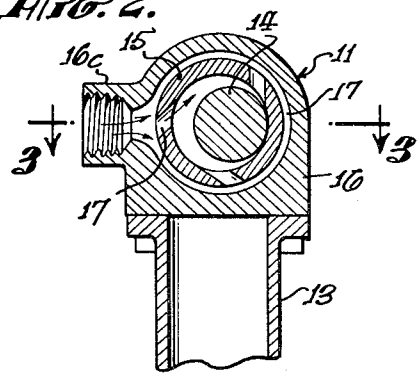

INVENTOR.
ALBERT G. BODINE, JR.,
BY
Forrest J. Lilly
ATTORNEY.

Jan. 26, 1965 A. G. BODINE, JR 3,166,772

SONIC APPLICATOR FOR SURFACE CLEANING

Filed June 13, 1963 3 Sheets-Sheet 2

FIG. 5.

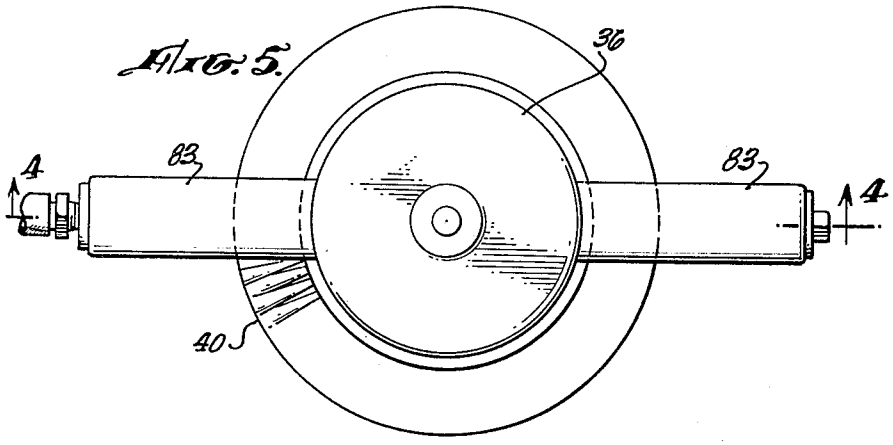

FIG. 4.

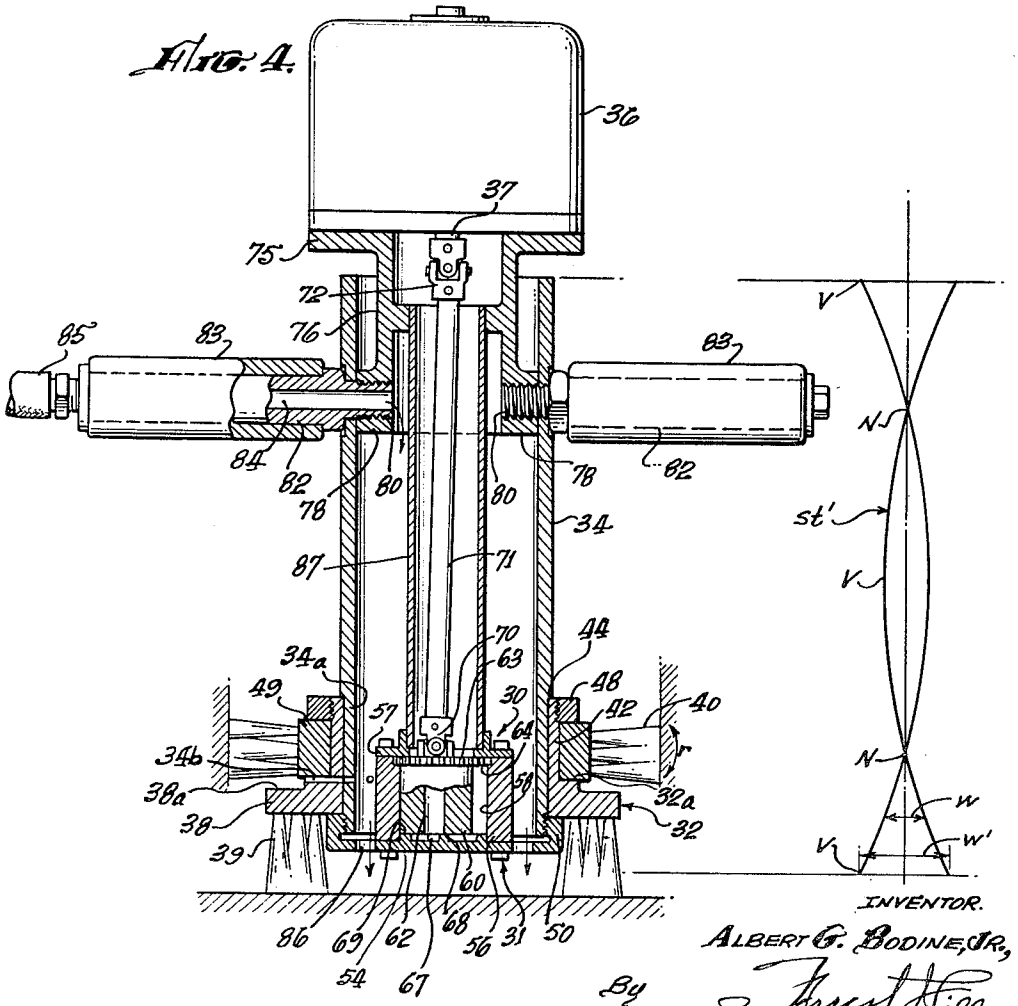

INVENTOR.
ALBERT G. BODINE, JR.,
By Ernest Filby
ATTORNEY

Jan. 26, 1965 A. G. BODINE, JR 3,166,772

SONIC APPLICATOR FOR SURFACE CLEANING

Filed June 13, 1963 3 Sheets-Sheet 3

FIG. 9.

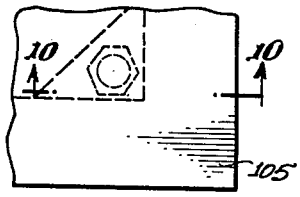

FIG. 10.

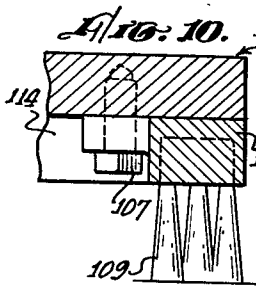

FIG. 11.

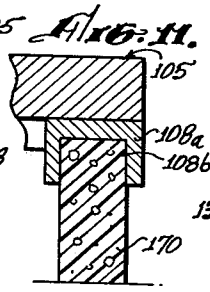

FIG. 8.

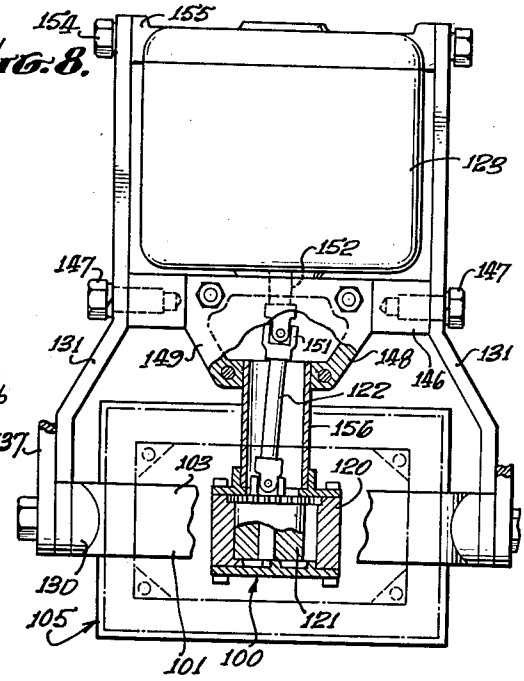

FIG. 6.

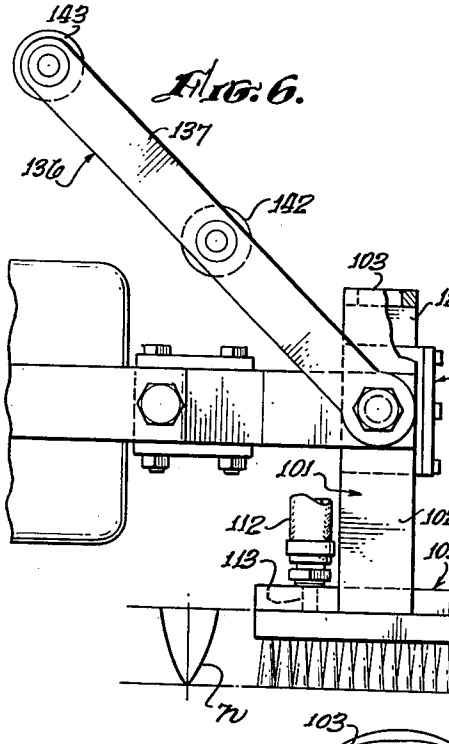

FIG. 7.

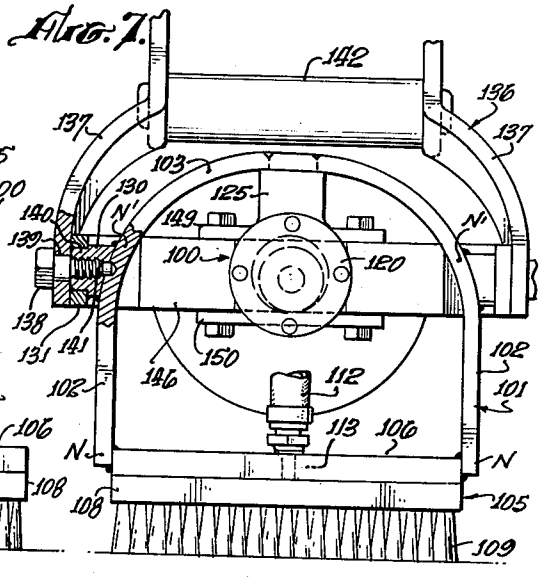

FIG. 12.

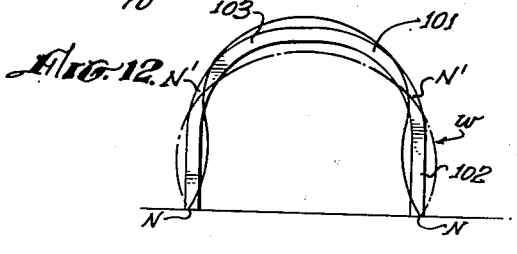

INVENTOR.
ALBERT G. BODINE, JR.,
BY
ATTORNEY

United States Patent Office 3,166,772 Patented Jan. 26, 1965

3,166,772

SONIC APPLICATOR FOR SURFACE CLEANING

Albert G. Bodine, Jr., Los Angeles, Calif.
(7877 Woodley Ave., Van Nuys, Calif.)

Filed June 13, 1963, Ser. No. 287,576
16 Claims. (Cl. 15—22)

This invention relates generally to vibratory brush or scrubber type surface cleaners, and more particularly to such cleaners characterized by vibratory drive of sonic nature, or involving sonic vibration. The device of the invention is herein illustratively described as of a hand-held type, but with no intended implication of limitation thereto. The device of the invention has other adaptations, as, for example, as a sander.

The reference to drive of a sonic nature contemplates a source or generator of vibrations, such as a mechanical generator, sometimes referred to as a sonic oscillator, and an elastically vibratory member acoustically coupled to such generator, and adapted to be set into elastic deformation vibration by virtue of sonic frequency cyclic force received from the generator. The elastically vibratory member can be a distributed constant transmitter of sonic (elastic) wave action characterized for example by a resonant standing wave pattern; or it can be a lumped constant system characterized by both vibratory mass and elasticity, and vibratory at resonance in a predetermined wave pattern; or it can be a combination of these types. In all cases, vibration takes place involving cyclic elastic deformation of elastic members, the expression sonic vibration broadly implying cyclic elastic deformation, as a consequence of sonic wave transmission in an elastic medium, whether in air, liquid, or an elastic solid, rather than audible sound. However, sonic vibration as employed in connection with the invention involves cyclic elastic deformation in physical members which are generally operated at or in the region of resonance, and whose scale is such that the frequency of operation, for resonance, is generally well up in the audible range, as of the order of hundreds of cycles per second, or higher, and thus well above the frequencies used with ordinary vibratory brushes. At these fairly high vibration frequencies, the acceleration of the brush on each vibratory movement or stroke is exceedingly high, and it follows that the scrubbing force exerted against the surface to be cleaned is correspondingly high. Speaking broadly, this is, in fact, a principal advantage of the use of sonic vibrations in the drive of the brush, scrubber, or other applicator. Successful utilization of the principle of sonic vibration, however, presents a number of relatively obscure problems, and it is to the solution of these problems that certain objects of the invention are addressed.

A general object of the invention is accordingly the provision of an effective and powerful sonically driven vibratory brush or the like, and further objects, and corresponding accomplishments, are concerned with the provision of sonic features by which a strong and vigorous sonic scrubbing action is accomplished using a reasonably light-weight but high performance oscillator.

The invention makes use of three elements in combination, a sonic generator or oscillator, an elastically vibratory resonator member acoustically coupled to the generator, and having a resonant frequency at the operating frequency of the generator, and finally, the applicator element, brush, scrubber, sander, or the like, acoustically coupled to the generator and to the resonator member. The resonator member may be acoustically intercoupled between the generator and the applicator, where it is conveniently available for use as an acoustic lever, as will be more fully explained hereinafter. However, the generator and resonator may both be directly acoustically

coupled to the applicator, and be acoustically coupled to each other through the applicator.

The elastically vibratory resonator element functions in both arrangements mentioned in the preceding paragraph to "tune out" the force wasting mass or inertia of the applicator and of the body structure of the generator. Thus, for reasons that will appear more clearly hereinafter, the applicator is preferably made or loaded to be relatively massive and thus of substantial inertia. In addition, the vibratory body structure of the sonic vibration generator is fairly massive and thus affords a substantial inertia. In absence of counter measures, great vibratory force would be required of the generator just to vibrate these inertia members. The elastically vibratory resonator member, however, contributes an amount of elastic stiffness reactance to balance the mass or inertia reactance at a predetermined operating frequency, i.e., at resonance, so that the large vibratory masses mentioned above then vibrate without consumption of force from the generator. This means, of course, that the entire vibratory output force from the generator is available for scrubbing the brush or other applicator against the work surface.

Certain further features of the invention can best be explained in terms of impedance, which is conventionally defined as the ratio of vibratory force magnitude to velocity at any vibrating point in the system. It is also necessary to understand that impedance can be vectorially resolved into a resistive or power consuming component r, and at right angles thereto, two mutually opposed reactive components, a mass reactance component ωm, and an elastic stiffness reactance component

$$\frac{K}{\omega}$$

where ω is the constant $2\pi f$, f is frequency, m is the effective vibratory mass of the system, and K is the constant of elastic stiffness. The equation for impedance Z is

$$Z=\sqrt{r^2+\left(\omega m-\frac{K}{\omega}\right)^2}$$

Resonance, mentioned hereinabove, is attained when

$$\omega m=\frac{K}{\omega}$$

at which time the impedance becomes numerically equal to the frictional resistance r.

In addition to resonance, it is very desirable and important to construct the vibratory system for high "Q," which is a figure of merit of vibratory systems somewhat analogous to flywheel effect in rotational systems. The factor Q may be defined as the ratio of energy stored to energy consumed in the vibratory system per half cycle, and is equal to

$$\frac{\omega m}{r}$$

It will be seen that the higher the vibratory mass m, the higher will be the Q of the system, meaning desirably sharper tuning for resonance, greater energy storage relative to energy expanded, more stability, and reduced tendency to stall. Accordingly, the mass reactive impedance component of the vibratory applicator is made large, by use of a large inertia applicator, or by mass-loading the applicator. The impedance of the applicator, operating against the work surface, is thus large, meaning a large ratio of vibratory force to vibratory velocity (and amplitude). The applicator thus moves very forcefully through a very short vibratory stroke. This vibration is at both high impedance and high Q, and therefore virtually impossible to stall. The large mass reactive impedance provided at the applicator plus that of the vibratory body of the vibration generator are then bal-

anced, at the operating frequency, by use of necessary elastic stiffness in the elastic resonator.

Moreover, for good performance, the combination of vibration generator and elastic resonator are designed for an output impedance characteristic which is of the order of magnitude of the impedance of the applicator, this impedance matching or adjustment being necessary to assure good power delivery to the applicator.

Finally, for those cases in which the elastic resonator is acoustically intercoupled between the generator and the applicator, the aforementioned large mass applicator locates the nearest node in the wave pattern of the resonator close to the applicator, and thus provides for a higher impedance at the coupling point between resonator and applicator than at the coupling point between generator and resonator. This amounts to what is sometimes referred to as an acoustic lever, and sometimes as an impedance matching transformer. It permits a high impedance load to be driven effectively by a generator of lower output impedance. I preferably use an active, relatively light-weight, high performance vibration generator, of low input impedance, and therefore, easily driven, and whose output impedance is substantially elevated. The vibratory force output, at this elevated impedance, is then converted by the acoustic lever effect accomplished by the mass loading of the oscillator to the level of the still higher impedance encountered at the applicator while scrubbing on the work surface.

The preferred vibration generator is of a type delivering a gyratory output force, i.e., a rotating force vector. The output force may be regarded as the resultant of two sinusoidal alternating forces acting at a point in quadrature, i.e., with 90° phase difference. The preferred generator construction involves a gyratory mass element rolling within a circular raceway in a relatively massive generator body. The generator body is thereby subjected to a gyratory force which causes it to tend to gyrate bodily, and to exert a gyratory force on any member to which the body may be coupled. There are many forms of generators capable of delivering such an output, and an elementary form consists simply of an eccentrically weighted flywheel. The preferred generator herein shown is of a type first disclosed in my prior application entitled Vibration Generator for Resonant Loads and Sonic Systems Embodying Same, filed March 21, 1962, Serial No. 181,385.

Such a gyratory generator, i.e., one characterized by a rotating output force vectory, can be applied to produce a very desirable gyratory motion to the applicator, wherein each point on the applicator describes a circular motion path. This circular motion path can be, effectively either in or parallel to the surface to be cleaned, or it can be in a plane at right angles to such surface, or otherwise. In all such cases, the motion path is superior for cleaning effectiveness to simple linear vibration. Still further, and as a particularly novel and valuable performance, the rotating output force vector of the generator can be made to coact perferentially with a particular linear mode of vibration of the resonator, by causing the vibration frequency of the generator to approximate the resonant frequency of the resonator for such mode, with the result that the motion path is modified from circular to an especially effective elliptical form.

A preferred but optional feature of the invention involves, in addition to features of the invention described above, the feeding of a fluid, such as water, with or without abrasive or detergent, into a hollow body region or cavity of the applicator, open on one side to the surface to be cleaned, in such an arrangement and manner that a fluid body is maintained against the latter. This body of cleaning fluid is preferably sonically oscillated, so that a cavitation type cleaning action takes place at the surface to be cleaned. According to one species, I maintain a stream of flowing water to the center of a large sponge or brush mounted in a rigid brush head, so that a body

of water can be maintained between this rigid member and the surface to be cleaned. A special type of sonic wave pattern, only a fraction of a wavelength, is then preferably set up in this body of water, terminating at the surface to be cleaned as a boundary. This rigid member can also comprise the above-mentioned mass member or mass load for the brush, used to produce a large and highly mass-reactive impedance at the brush.

The flowing stream of water tends to wash the dirt away as it is removed from the surface to be cleaned. In some situations, however, a continuous flow may be undesirable. In these situations I prefer to employ a fluid which is more paste-like, so that it will be held within the applicator. Thick soap solutions, or jells, are here effective. These kinds of substances can be applied to the applicator by dipping, or other means, not necessarily requiring a continuous fluid conduit.

It is important to note that this applicator is in all instances located close to the work surface. This causes the resistive impedance to be very high. Therefore the above-described high reactive impedance of the brush member, plus the impedance adjusting features of the oscillator, and in some instances of the elastic member, are the salient features of this invention.

By way of partial summary of some of the foregoing concepts, by use of a fairly high inertia applicator, in a combination with an elastic resonator affording an acoustic lever effect, I can deliver substantial acoustic work right close to the work surface, while still using a light-weight high performance oscillator or generator. The high reactive impedance of the applicator tends to prevent the high resistive impedance at the applicator in operative engagement with the work surface from reducing the overall Q of the system below the necessary level for maintenance of large work output. The acoustic lever effect, afforded when the resonator is intercoupled between the large mass applicator and the generator, is desirable for the reasons stated. However, the advantage of a large mass applicator is still available even when the generator is directly coupled to the applicator, with the resonator acoustically coupled to the two, but not between them. In the latter case, of course, the generator must deliver its output at an output impedance of the order of that of the impedance of the applicator in operative engagement with the work surface. In all cases, a round, or preferably elliptical, motion path for the applicator is of first rank importance, and results in augmented cleaning activity. Broadly, however, other forms of generators, such as purely linear motion types, can be employed in this invention.

The invention will be better understood from the following detailed description of a number of illustrative embodiments thereof, reference for this purpose being had to the accompanying drawings, in which:

FIG. 1 is a side elevational view, with parts broken away to show underlying parts in section;

FIG. 2 is a vertical transverse section through the generator of FIG. 1, being a view taken on section line 2—2 of FIG. 3;

FIG. 3 is a horizontal section taken on line 3—3 of FIG. 2;

FIG. 4 is a vertical medial section of a second embodiment of the invention, being taken in accordance with line 4—4 of FIG. 5;

FIG. 5 is a top plan view of embodiment of FIG. 4;

FIG. 6 is a side elevational view of a third embodiment of the invention;

FIG. 7 is a front elevational view of the embodiment of FIG. 6;

FIG. 8 is a plan view of the embodiment of FIG. 6, with parts broken away and other parts in section;

FIG. 9 is a fragmentary top plan view of portion of the applicator of the embodiment of FIGS. 6 to 8;

FIG. 10 is a detail section taken on line 10—10 of FIG. 9;

FIG. 11 is a view similar to a portion of FIG. 10, but showing a modification; and

FIG. 12 is a diagrammatic view of the bow spring of FIGS. 6 to 8, also showing thereon a wave diagram depicting the vibratory pattern thereof.

With reference first to FIGS. 1–3, which disclose an elementary form of the invention, the cleaner is designated generally at **10**, the sonic vibration generator or oscillator at **11**, the applicator at **12**, and the elastically vibratory resonator at **13**, the latter being acoustically coupled at one end to generator **11**, and at the other to applicator **12**. Thus, in this illustrative case, the resonator is intercoupled between the generator and applicator, and functions as a sonic wave transmitter from the former to the latter. As will appear later, this last mentioned function is not an essential feature of the generic invention, though a characterizing one of the species of FIG. 1. The vibration generator **11** can be any of various types involving a driven cyclically movable mass element confined or constrained by a more massive body whereby the movable mass element exerts a cyclic force on the body. The body will thereby be set into corresponding cyclic movement, but at materially lesser amplitude than that of the cyclic movement of the driven mass element owing to its greater mass. The cyclically movable mass element is one which can be easily driven by a low force but high velocity driving means. As a simple example, I may use a generator or vibrator **11** embodying a mass element which comprises a cylindrical roller **14**, movable orbitally about a cylindrical track of somewhat greater diameter defined by the inside surface of a bearing sleeve **15** set horizontally into a corresponding bore in a body **16**, it being understood that the bore in body **16** is closed at opposite ends by body end plates, such as **16***a*, which engage the ends of sleeve **15**. A channel **17** is sunk into the body **16** around sleeve **15**, and serves to convey air under pressure from an air inlet **16***c* to the entire periphery of the central region of the sleeve **15**. Tangential jet nozzles **17** convey this air into sleeve **15**, and this air, impinging on roller **14**, drives the latter to roll around the inside of sleeve **15** in an orbital path. As suggested in FIGS. 1–3, the body **16**, inclusive of its end plates and sleeve **15**, is considerably more massive than the roller **14**. The air supplied to inlet **16***c* is conveyed via a hose **18** leading from a suitable source of supply and means of pressure regulation, not shown. The pressure of air fed to jet nozzles **17** is regulated to adjust the cyclic speed of the roller about the bore **16** to a condition of resonance, as will be described hereinafter. Spent air escapes via ports **16***b*.

The resonator **13** comprises a normally vertically disposed elastic rod **13**, preferably tubular, as here shown, and composed of a suitable elastic material, such as steel. The vibration generator **11** is acoustically coupled to the upper end of the rod **13**, in this instance by end flange **19** and screws **20** which effect a rigid connection between the end of rod **13** and generator body **16**.

To the lower end of rod **13** is acoustically coupled the applicator **12**, which in this instance consists of brush. This brush may comprise a relatively massive head **22**, into which is set a ring of bristle tufts **23**. As shown, the head **22** is welded to a flange on the lower end of rod **13**. The ring of tufts **23** form a pocket, chamber or cavity **24** on the underside of the brush head, which is closed when the brush is applied to a work surface, such as indicated at **25**. Water is fed to the pocket **24** via a port **26** in the work head, to which water is supplied as presently described. The head member **22** of brush **12** is made relatively massive so as to afford a high reactive mass impedance at the location of the brush head relative to the resistive impedance caused by scrubbing of the brush on the work surface, so as to assure a high Q factor as explained hereinabove. Preferably, the brush head is made to be more massive than the body **16** of generator **11**, in a ratio of, for example, five or six to one.

Rod **13** is equipped, somewhat above brush **12**, at a later described sonic wave node, with a pair of oppositely projecting handles **27***a* and **27***b*. Handle **27***b* has a longitudinal bore **28** affording a water passage opening into the inside of tubular rod **13**, so as to feed the water supply port **26** in brush head **12**. To the outer end of bore **28** in handle **27***b* is coupled a water supply hose **29**.

In operation, roller **14** is driven about the surface of bore **15** constituting a cylindrical track or raceway, at a number of revolutions or cycles per second depending upon the pressure of the air introduced via tangential injection nozzle **17**. As will appear, the roller **14**, spinning about the raceway **15**, exerts a centrifugal force on the body **16**. This centrifugal force tends to produce a gyratory bodily movement of the generator housing **16** through a relatively small amplitude, depending upon the relative masses of the roller **14** and body **16**, and also, of course, upon the centrifugal force developed by the roller **14**. This gyratory force may be resolved into a component of alternating force exerted along a line extending longitudinally of rod **13**, and another component of alternating force at right angles to the first, these two alternating force components being out of phase with one another by 90°, or in other words "in quadrature." It is possible to augment the effect of either of these alternating force components by adjusting the frequency of rotation of the roller **14** to a resonant frequency of the elastic rod or resonator **13**.

Assume first that it is desired to vibrate the brush or other appliance **12** in a direction toward and from the work surface **25**. In such case, it will be necessary to set up a longitudinal wave action in rod **13**, preferably a resonant standing wave, with two velocity nodes V and V' at the ends, and with an intermediate velocity node N, as diagrammed, for example, at *st* in the left hand portion of FIG. 1.

An idealized half-wavelength longitudinally oriented standing wave, with two equal velocity antinodes and a velocity node half way therebetween, would be set up in a uniform longitudinally extended elastic rod without lumped mass terminations, when an alternating force is exerted on one end of the rod, in the longitudinal direction, at a frequency equal to $c/2L$, where c is velocity of sound in the medium of the rod and L is the length of the rod. Under such conditions, the two half-lengths of such a rod alternating elastically elongate and contract, the center point of the rod remaining stationary, and the magnitude of elastic elongation and contraction progressively increasing from the center point to each extremity of the rod. The two half-portions undergo this longitudinal elastic deformation vibration in unison, so as to maintain dynamic balance. The stationary center point of the rod marks the velocity node, and the points at the end of the rod where the longitudinal deformation is at a maximum are referred to as the velocity antinodes. Such idealized behavior is modified in cases such as the present wherein so-called "lumped" masses are connected to the ends of the rod.

In general, either quarter wavelength portion of the idealized half-wavelength rod, from the node at the midpoint to the antinode at the end, may be replaced by a shorter length of rod terminated by a lumped mass of appropriate magnitude, and this may be done without altering the frequency of vibration and with the only effect on the standing wave pattern in the rod being a shortening thereof. Both half portions of the rod may be thus replaced, each by a shorter length of rod and a mass.

Considering the system of FIG. 1, the mass of the generator **11**, terminating the rod **13** at the top, is not large, and for present purposes, may be neglected. However, the mass of the brush head, which terminates the lower end of the rod, is fairly substantially, and must be considered. The standing wave pattern for the elastic rod **13**, with the generator **11** on one end and the fairly massive brush head **22** on the other, is represented in FIG. 1 at *st*. The horizontal width of the diagram

at any point therealong will be understood to represent the amplitude of longitudinal elastic vibration of the corresponding point in the rod 13. From velocity antinode V down to node N (where the handles are attached to the rod 13) is substantially a quarter wavelength (actually a little less owing to the mass of the generator 11). From node N to antinode V', owing to the mass of the brush, the distance is reduced from a quarter wavelength distance to a small fraction thereof. It will be seen that the width of the standing wave diagram *st* is substantially greater at the velocity antinode V than at the velocity antinode V', thus denoting materially greater vibration amplitude (in the longitudinal direction of rod 13) at the coupling point between the generator and rod 13 than at the coupling point between the rod 13 and the applicator. The brush head therefore vibrates at reduced amplitude, as compared with the vibration amplitude of the generator body. For the case of FIG. 1, the vibration frequency can be calculated closely from the equation $f=c/4L'$, where L' is the nearly quarter wavelength distance from V to N. The frequency $f=c/4L'$ is the lower limit of longitudinal resonant sonic operation. The standing wave behavoir represented by the diagram as indicated at *st* in FIG. 1 is a resonance phenomenon obtained when the frequency of the generator 11 approximates the resonance frequency for longitudinal vibration of the rod 13, together with the masses of generator body 16 and applicator 12. This resonance frequency can be easily found by gradually increasing the pressure of the air fed to generator 11.

The brush head 12 is thus sonically vibrated toward and from the work surface 25. Because of the component of alternating force developed by the roller 14 in the direction at right angles to the longitudinal direction of the rod 13, there will also be some degree of lateral vibration in the rod 13 and this will be transmitted to and exhibited by the brush head 12. However, this lateral vibration will be non-resonant in character, and much subdued when compared with the resonantly augmented character of vibration in the longitudinal direction of the rod 13. The resultant of the resonantly augmented longitudinal vibrations and subdued lateral vibrations is a highly desirable elliptical motion path, with the long axis of the ellipse normal to the work surface. The bristles are thereby given an effective "picking" action against the work surface.

As an alternative, by choice of a lower operating frequency, i.e., by driving the ring 14 to spin at speeds below that for longitudinal resonance, a point can easily be reached at which resonance is obtained for the lateral mode of vibration. In this case, a standing wave is again achieved, much as indicated at *st* in FIG. 1, the difference being that points along the rod 13 vibrate laterally, instead of longitudinally. In this case, there is also some degree of longitudinal vibration, but such vibration is at a subdued amplitude as compared with the lateral mode. Here, an elliptical motion path is produced, which is in a vertical plane, with the long axis horizontal, and the short axis vertical. Here also the lower limit formula is again $f=c/4L$, where c is the velocity of lateral wave propagation.

Referring again to FIG. 1, and to the standing wave diagram *st* thereof, and assuming again the longitudinal mode of standing wave vibration, or alternatively, the lateral mode of standing wave vibration, it will be seen that the width of the standing wave diagram at the location of the applicator is relatively narrow, denoting low vibration amplitude, and low vibratory velocity. At the location of the generator 11, on the other hand the standing wave diagram indicates relatively large vibration amplitude (in comparison to that at the applicator), and therefore relatively large vibratory velocity. The cyclic or vibratory force amplitude, on the other hand, is by comparison relatively low at the generator, and relatively high at the applicator. The impedance (ratio of force to velocity) at the applicator is thus considerably amplified over that at the generator. Thus there is an acoustic lever effect, or impedance transformation, from the generator through the resonator to the applicator. Desirably high impedance is gained at the applicator. Because of the large mass of the applicator, in comparison to the frictional resistance caused by the brush scrubbing on the work surface, the "load" on the resonator and generator is highly mass reactive. This in turn means that the scrubbing resistance will not be able to reduce the Q of the system below the level required for stable operation at good work output. The large mass which must be vibrated means, of course, a large mass reactance, and this is an important benefit to the system for the reason just stated. However, this large mass would not be a benefit, if it were not that the system involves a large elastic stiffness reactance, equal at the resonant frequency to the mass reactance. This elastic stiffness reactance derives, of course, from the elastic stiffness factor or constant of the elastically vibratory rod 13. Under the described condition of resonance, no force is consumed in vibrating either the generator housing or the massive brush, over and above that required for scrubbing the brush against the work surface, and that consumed by internal friction.

The generator 11 and rod 13, in combination, are required to have an output impedance of the order of that presented by the massive brush in scrubbing contact with the work surface. The generator 11 can have a lower output impedance, in view of the impedance amplifying property of the rod or resonator 13 loaded as described, and still achieve the impedance match at the brush head by acoustic leverage as described in the preceding paragraph. The movable mass element 14 of the generator moves with low impedance, in view of its relatively small mass but high velocity. This low impedance is transformed, by reason of the greater mass of the generator body, to a higher order generator output impedance.

If the acoustic lever effect is utilized, as by having the mass of the brush head greater than the mass of the generator body, the output impedance magnitude of the generator is then transformed to a higher impedance at the coupling point between the rod 13 and the brush head. The output impedance of the generator thus need not be as high as required at the brush head. If the acoustic lever effect is not employed, as, for example, if the generator mass is large enough to approximate the brush mass, then the generator output impedance, at the coupling point between generator and rod 13, should be of the order of the required output impedance at the brush head.

It will be seen that the device of FIGS. 1–3 conforms, whether operating with a longitudinal standing wave, or a lateral standing wave, to the acoustical features and requirements discussed fully hereinabove and in the introductory part of this specification.

During operation, water is supplied to the brush pocket or cavity 24 via hose 29. Assuming the longitudinal mode of vibration of the brush 12, the head 22 vibrates toward and from the surface to be scrubbed through small amplitude but with high force, like a very short stroke but powerfully driven piston, and acoustically couples to the water in pocket 24. A wave pattern can be thereby set up in this water, with a node or pseudo node at the surface to be cleaned. A large cyclic pressure variation can be thus caused to occur at the work surface, sufficient to accomplish cavitation, and a cavitation-type cleaning. Detergent, and/or abrasive substances, can of course be supplied to the water; and the water serves to carry away the dirt removed from the surface. Alternatively, the brush head can be simply dipped into a cleaning fluid or substance, such as soap suds, a detergent solution, or a thick paste-like cleansing solution or jell of any kind desired.

Attention is next directed to FIGS. 4 and 5, showing a

modified form of the invention. The vibration generator is designated generally by the numeral 30, and is of a gyratory type, as to be explained. The body 31 of this generator is acoustically coupled to the applicator 32, again illustratively a cleaning brush, and in this embodiment of the invention, the generator body 31 and brush 32 are rigid with one another.

A resonator 34 is provided, and is in the form of a vertically disposed elastic tube or cylinder, composed of a material such as steel with good elastic fatigue properties. The lower end of resonator 34 is acoustically coupled with both generator body 31 and the applicator or brush 32, being made rigid therewith, as presently to be described in more particular. An electric drive motor 36, having a vertical drive shaft 37, is mounted above the upper end of the elastic tube 34, co-axially therewith, and is drivingly coupled as presently to be described with the gyratory vibration generator 30.

Considering the applicator 32 in more particular, it comprises, as here shown, a main brush head ring 38, preferably composed of steel, so as to be comparatively massive in character, in accordance with principles described hereinabove, and this brush head ring has downwardly directed bristle tufts 39. Ring 38 fits snugly over the reduced lower extremity 34*a* of tube 34. The brush may comprise merely the ring 38 and the downwardly projecting tufts 39, in which case the ring 38 would be modified to terminate shortly above its upper surface 38*a*. However, provision is here shown for auxiliary laterally disposed brush tufts 40, and for the accommodation thereof, there is formed, integrally with ring 38, an upwardly extending sleeve 42, also slidable on the reduced lower extremity 34*a* of tubing 34, and this sleeve 42 abuts a downwardly facing shoulder 44 at the juncture of tubing 34 with its reduced portion 34*a*. The upper extremity of sleeve 42 is screw-threaded to receive a nut 48, and the latter together with an upwardly facing shoulder 32*a* on ring 32 accommodate a base ring 49 supporting the laterally projecting tufts 40, ring 49 being clamped in place by means of the nut 48. A nut member 50 screwed onto the lower extremity of tube 34 bears upwardly against and supports the lower end of brush head or ring 38, and serves to clamp brush head 38 tightly against shoulder 44.

The aforementioned nut member 50 extends upwardly from the periphery of a plate 54 which forms the base of gyratory generator 30. This generator 30 is of a type more fully disclosed in my aforementioned application Serial No. 181,385. The showing here is somewhat diagrammatic for simplicity. The body 31 of the generator 30 includes the base plate 54, and includes also a cylindrical side wall 56 rising from base plate 54 and secured thereto, as by suitable screws, as well as a top end plate 57. Wall 56 is formed with a vertical cylindrical bore 58 which forms a raceway for a gyratory or orbitally movable inertia mass roller 60, in the general form of a centrally bored cylinder, of a diameter somewhat less than that of the bore 58. Roller 60 is rotatable on a vertical shaft or axle 62 which projects axially from the hub portion of a spur gear 63. The pitch circle of this spur gear 63 is of substantially the same diameter as that of the roller 60. Gear 63 meshes with an internal gear 64 fixed or formed within housing body wall member 56 concentrically with the corresponding raceway bore 58, the pitch circle of this gear 64 being of the same diameter as said bore 58.

The roller 60 is designed to move in an orbital path about the raceway bore 58 as a guide, bearing against the surface of said bore by centrifugal force. In this motion, gear 63 runs in mesh with gear 56. To maintain the roller 60 in proper engagement with the raceway 58 while a generator is at rest, or coming up to speed, the axle 62 of the roller is provided with an axial pin 67 which rides around and is guided by a pin or boss 68 projecting upwardly from the center of plate 54, co-axially with bore 58. As somewhat diagrammatically here shown, the roller 60 rides at its lower end on a bearing face 69 formed on the upper side of plate 54. It will of course be understood that a more sophisticated bearing for the roller 60 will preferably be provided in practice, this being within the skill of the art. The roller 60 is driven through a universal joint coupling 70 connected between a conically gyratory shaft 71 and the hub of spur gear 63. The upper end of shaft 71 is driven through a universal joint coupling 72 from the shaft 37 of the aforementioned drive motor 36.

As here shown, motor 36 is mounted on a base or table 75 formed at the top of a tubular fixture 76 which is received in the upper end portion of tube 34 and is secured or mounted to the latter preferably at or near a level one quarter the length of tube 34 downward from the upper end thereof. Tubular member 76 has two diametrically opposite mounting bosses 78 engaging the inside of tubing 34 and shaped to conform to the curvature thereof, and these bosses 78 are bored and internally threaded to receive threaded mounting studs 80 projecting through diametrically opposed apertures in the sidewall of tube 34 located approximately 25% of the length of the tube down from the upper end thereof. Studs 80 comprise reduced extensions on oppositely extending shafts 82, which mount hand grips 83. The left hand shaft 82, as seen in FIG. 4, is bored to provide a water passage 84, and a water supply hose 85 is coupled to one end of this passage, while the opposite end portion of the passage extends through the corresponding stub 80 and opens inside tube 34. This water is discharged from the bottom of tube 34 through ports 86 in the bottom of ring 50, and through lateral discharge ports 34*b* just under brush tufts 40. Preferably, a housing sleeve 87 is located around shaft 71, between generator top end plate 57 and an internal shoulder formed in fixture 76.

Operation of generator 30 is as follows: rotation of conically gyratory shaft 71 by motor 36 causes spur gear 63 to roll around internal gear 64, shaft 71 moving in a conical gyratory fashion. The inertia roller 60 rolls on the bearing surface afforded by bore 58, moving in an orbital path. The centrifugal force so developed by the roller results in the exertion of a rotating force on the body member 56, the force vector rotating about the axis of raceway 58. The roller 60 turns at nearly the same rate of rotation as the gear 63, with a slight variation or creep therebetween accommodated by the rotatable mounting of said roller on shaft or axle 62. Thus a gyratory force, i.e., a force vector rotating about the vertical axis of the generator body 56, is exerted on said body 56, and this gyratory force is transmitted to body base member 54 and thence to brush head 38, as well as to brush head or ring 49. This gyratory force is also transmitted to the lower extremity of elastic tube 34. Note at this point that this gyratory force, or rotating force vector, operates in a horizontal plane, or better stated, in a plane parallel to the horizontal work surface to be cleaned. Assuring this gyratory force exerted on tube 34 to occur at a cyclic frequency which is equal to or approximately that of the resonance frequency for a lateral mode of elastic standing wave vibration of the tube 34, a gyratory standing wave is thereby set up in said tube, as represented at *st'* to the right of the tube 34 in FIG. 4. In this standing wave diagram, the width of the diagram at any point represents the amplitude of gyratory vibration along the tube. Tube 34 does not rotate bodily, but portions thereof spaced from the nodes N of the gyratory standing wave gyrate elastically in circular paths in horizontal planes by corresponding elastic bending of portions of the tube from the neutral position. The points of maximum bending amplitude are called velocity anti-nodes V, and of course the bending amplitude at the nodes is substantially zero. Ideally, i.e., ignoring mass loading of the lower end of the tube 34, the velocity nodes N would be located at points one-quarter of the length of the tube from each of its ends, and velocity

antinodes V would be located at each extremity of the tube and also at its midpoint. These locations are somewhat modified because of the mass loading of the lower end of the tube by the brush assembly, as will be described presently. The gyratory standing wave obtained is a form of harmonic lateral or transverse elastic vibration, specifically, the resultant of two components of linear transverse harmonic vibration occuring at right angles to one another at 90° phase difference. The resultant gyratory elastic vibration is propagated longitudinally along the tube at the speed of travel of transverse elastic waves.

The brush head ring 38, being located downwardly of the lower node N, has a gyrational amplitude represented by the width of the standing wave diagram as at *w*. The bristle tufts 39, being quite stiff, participate in the gyratory standing wave vibration, and their gyratory vibration amplitude, where they scrub on the surface to be cleaned, is represented at *w'*. It will be appreciated that the motion path of each bristle is a circle in a horizontal or transverse plane. The bristle tufts 40, being at a node of the standing wave, do not participate in the same type of gyratory action, but do have a rocking action, owing to the bending of the tube 34 at the node, as represented by the arrow *r* in FIG. 4. Actually, these tufts 40 have one component of oscillatory motion as indicated by arrow *r*, and another component of oscillatory motion at right angles to arrow *r*, as will be evident from the bending motion undergone by the tube 34 at the node.

It will of course be clear that the brush 32 is the main brush of the machine, and is useful for cleaning either a horizontal or vertical surface. The lateral auxiliary brush will be found useful on walls and in various other evident practical situations, and is illustrative of the fact that the brush or other applicator may be so located relative to a node, as well as at an antinode, or a point therebetween.

The use and operation of the cleaning apparatus of FIGS. 4 and 5 will be understood from the foregoing description. During operation, water is supplied to the brush, through the means described above, and serves functions analogous to those mentioned in connection with FIGS. 1–3. It will be seen that, in the embodiment of FIGS. 4 and 5, the elastically vibratory resonator member or tube 34 is not between the generator and the applicator, and thus does not constitute an acoustic conduit for the sonic wave energy from the generator to the driver. It is, however, acoustically coupled to both the generator and the applicator; and while in this situation, it is incapable of an acoustic lever or impedance transformer function, it does fulfill the function of providing a system capable of resonance, wherein its elastic stiffness reactance counterbalances the mass reactances of the generator and the applicator. Among the advantages thereby gained are the ability to use an applicator, e.g., a brush, of large mass, and therefore one of high mass reactance relative to the frictional resistance encountered by the brush or other applicator, so that a high Q factor is attained, in accordance with earlier explained principles. It will of course be evident that for the case of FIGS. 4 and 5, the generator should have an output impedance of the order of the total of the impedances of the resonator and the brush under working conditions.

Reference is next directed to FIGS. 9 to 12, showing a further modified form of the invention. In this case, there is again the combination of a sonic vibration generator, an elastic resonator, and a relatively massive brush or other applicator, with the resonator acoustically intercoupled between the generator and the applicator, as in the embodiment of FIGS. 1–3.

The sonic vibration generator is designated generally by numeral 100, and is of the same type as that employed in the embodiment of FIGS. 4–5.

The elastic vibratory resonator is in the form of a bow spring bar 101. This bow spring bar is illustratively shaped like an inverted U, having two parallel vertical legs 102 joined by a semi-circular top portion 103.

An applicator or brush assembly is designated generally at 105, and, as here shown, embodies a relatively massive rectangular top plate 106, to the underside of which is fastened, as by screws 107, a rectangular frame 108 carrying downwardly projecting bristle tufts 109. A water supply hose 112 feeds water through a port 113 in plate 105 to the space or cavity 114 inside brush frame 108.

The lower extremities of the legs 102 of bow spring bar 101 are welded to opposite ends of brush assembly plate 106, as clearly shown.

Returning attention to the vibration generator 100, this generator is substantially the same as the generator 30 of FIGS. 4 and 5, and therefore need not be re-explained in complete detail. Suffice it to say that it has a body member 120 formed with a cylindric raceway for an inertia rotor 121, driven in the manner of the generator of FIGS. 4 and 5 from a conically gyratory shaft 122 powered by an electric drive motor 123. Body member 120 is unique in that it has formed, integral therewith, an upwardly extending neck 125 (FIG. 7) abutting the underside of the mid-portion of bow spring 101, and rigidly fixed thereto, for example, as clearly shown in FIGS. 6 and 7. Cyclic gyratory force developed in the body member 120 of generator 100 accordingly is transmitted via neck 125 to the mid-portion of bow spring 101. This gyratory force, when developed at a resonant frequency of the assembly of bow spring bar 101 and brush head assembly 105 mounted on the latter, causes the bow spring bar to vibrate with a wave pattern of the general nature suggested by the wave pattern diagram *w* in FIG. 12. Nodes N are exhibited at the lower extremities of the legs 102, and nodes N' will also be encountered at positions between nodes N and the mid-point of bow spring bar. Between these nodes, the bar flexes back and forth, as indicated with exaggeration in the wave pattern diagram *w* of FIG. 12, wherein the full lines represent one extreme position, and the dot-dash lines represent the other extreme position. It should be apparent that in this action, the lower extremities of the bar legs 102 move cyclically in a vertical direction. To explain, each time the bar 101 passes through its mid position, half way between the two extremes indicated in the diagram, i.e., each time the bar passes through its unflexed position, the bar must lengthen somewhat, and its lower extremity must lower slightly; and conversely, each time the bar flexes to a position such as indicated by the extremes of the wave pattern diagram, the bar is effectively shortened, and its lower extremities must elevate slightly. This vertical vibratory movement is transmitted to the brush head assembly, and accordingly, the brush vibrates vertically with reference to the surface engaged by the bristles. The diagram of FIG. 12 has represented only the effect of the vertical component of the gyratory motion of the coupling point between the generator body and the bow spring bar. The lateral component of this motion causes a lateral vibration of the bow spring bar and the brush as well. The resultant motion of the brush is the resultant of the two components of vibration. By operating the generator at a frequency at which resonance is achieved for the elastic mode depicted in FIG. 12, the vertical component exceeds the lateral component. In result, there is achieved a desirable elliptical path for the bristles of the brush, with the long axis vertical, as discussed in connection with FIGS. 1–3.

The bow spring bar 101 is engaged by the forward extremities of side frame straps 131 whose rearward ends support the aforementioned electric drive motor 123. A handle frame, generally designated at 136, has two side straps 137, whose forward and lower extremities engage over the forward extremities of side frame straps 131, and a shouldered screw 138 on each side extends through an aperture 139 in handle strap 137, then through a tapped mounting ring 140 set into the forward extremity of strap 131, and finally into a tapped bore 141 in mount-

ing boss 130. The screws 138, when tightly set up, secure the side frame straps 131 in a generally horizontally extending position, and the handle straps 137 in an angular position, as illustrated. The handle member 136 is here shown as provided with handle grips 142 and 143 connecting the side straps 137.

The frame straps 131 carry between them a bridge casting 146, secured as by screws 147, and including a central housing portion 148, completed by top and bottom plates 149 and 150. The housing so formed contains a universal joint 151 coupling the aforementioned conically gyratory shaft 122 with the motor shaft indicated at 152. The housing of motor 123 is secured in position between side frame straps 131 by means of screws 154 passing through the rearward extremities of straps 131 and engaging lugs 155 cast on the motor housing. The motor is further supported by a bearing, not shown, for its shaft 152, understood to be mounted in the frame casting 146. A sleeve 156 extending between housing member 148 and the adjacent end plate of vibration generator 100 houses the conically gyratory shaft 122.

Operation of the sonic cleaning machine of FIGS. 6–12 may now be understood. The motor-driven vibration generator 100 sets up a cyclic gyratory motion in the neck member 125 extending upwardly from the generator body, and this gyratory action, transmitted to bow spring bar 101, sets up a principal cyclic flexure in the latter as diagrammatically represented in FIG. 12. In considering the wave pattern of FIG. 12, it will be understood that inward flexure or bowing of the legs 102 is accompanied by upward bowing of the semi-circular top 103, and vice versa. As earlier explained, the cyclic flexure of the bow spring member between the limits indicated, with exaggeration, in FIG. 12, results in vertical vibration of the two nodal points N, and therefore vertical vibration of the applicator 105. As earlier explained, there is also a lateral component of vibration of lesser amplitude, so that the applicator actually describes a vertically elongated elliptical motion path. As in the embodiment of FIG. 1, the large mass of the applicator or brush assembly 105, in comparison with the relatively smaller mass of the generator body, results in an acoustic lever effect, or impedance transformation, between the generator body and the applicator through the bow spring bar 101, so that the applicator assembly vibrates through a relatively small amplitude, but with correlative high force, in response to greater amplitude vibration but lower force application at the point of coupling between the generator body and the bow spring. Also, as earlier mentioned, the vibration generator 100 is driven at a resonant vibration frequency for the spring bar 101 and applicator, so that vibration, in the wave pattern depicted in FIG. 12, is at resonance, with the spring bar 101 acting as a resonator, supplying the necessary elastic stiffness reactance to balance or cancel out the mass rectance of the vibratory system. As earlier explained, there is thereby afforded a system wherein the forces otherwise necessary to vibrate the large masses involved are counteracted by elastic stiffness forces, and the only net force required of the vibration generator in operation is that sufficient to overcome friction between the brush and the surface to be cleaned, and internal friction in the bending portions of the system.

FIG. 11 shows a modification, wherein the bristle tufts 109 are replaced by a ring 170 which may be composed of a sponge, or a substance such as foam rubber or the like. The ring 170 is set and cemented into a suitable cavity 108*b* in mounting ring 108*a* secured to applicator top plate 105, as indicated.

Water is supplied to the cavity 114, and a body of water in contact with the surface to be cleaned is thereby furnished, whether the applicator is of the bristle tuft variety, or the sponge rubber solid ring type of FIG. 11, as the case may be. In either event, the vertically vibratory brush head is capable of setting up a wave pattern in the body of liquid thus provided in contact with the surface to be cleaned, as represented at *n* in FIG. 6. Thereby, a pressure node, or pseudo node, may be created at the surface to be cleaned, affording a pressure variation cycle sufficient to bring about a cavitation type of cleaning.

As mentioned hereinbefore, brush or scrubber type applicators may be employed, intended to work in conjunction with a cleansing fluid. Dry type abrasive applicators are also within the scope of the invention, however, and it is to be understood that an applicator of an abrasive type, such as a sander, or one supporting an emery cloth for application to the work, may also be used.

A number of illustrative applications of the invention have now been shown and described. It will be understood, however, that these are for illustrative purposes only, and that various changes in design, structure and arrangement are within the broad scope of the invention as defined by the attendant claims.

I claim:

1. Apparatus of the character described, comprising: an applicator adapted for frictional rubbing contact with a work surface, a sonic oscillator having a vibratory output means, and an elastically vibratory resonator, said applicator, said oscillator and said resonator being acoustically intercoupled to one another, whereby said applicator and said resonator are vibrated by said oscillator, and means for driving said oscillator at a resonant frequency at which the elasticity reactance of said resonator substantially counteracts the mass reactance of the oscillator, applicator and resonator.

2. The subject matter of claim 1, wherein said applicator has a substantially greater mass than said oscillator.

3. The subject matter of claim 2, wherein the relative vibratory masses of said oscillator, resonator, and applicator are such that during service said acoustically coupled oscillator and resonator in combination have an output impedance of the order of the impedance of said applicator.

4. The subject matter of claim 3, wherein said resonator is intercoupled between said oscillator and said applicator, and wherein, during service, said oscillator has a lower output impedance than the impedance of said applicator, and said resonator between said oscillator and applicator functions to substantially match the impedance of said oscillator to the impedance of said applicator.

5. Apparatus of the character described, comprising: an applicator adapted for frictional rubbing contact with a work surface, a sonic oscillator comprising a body mass having a rotating output force, and an elastically vibratory resonator, said applicator, said oscillator body mass and said resonator being acoustically intercoupled to one another, whereby said applicator and said resonator are vibrated in response to said rotating output force of said oscillator body mass, and means for driving said oscillator at a resonant frequency at which the elasticity reactance of said resonator substantially counteracts the mass reactance of the oscillator, applicator and resonator.

6. The subject matter of claim 5, wherein said applicator has a substantially greater mass than said body mass of said applicator.

7. The subject matter of claim 6, wherein the vibratory masses of said oscillator body mass, said resonator and said applicator are such that during service said acoustically coupled oscillator and resonator in combination have an output impedance of the order of the impedance of said applicator.

8. The subject matter of claim 7, wherein said resonator is intercoupled between said oscillator body mass and said oscillator, and wherein, during service, said oscillator has a lower output impedance than the impedance of said applicator, and said resonator between said oscillator and applicator functions to substantially match the impedance of said oscillator body mass to the impedance of said applicator.

9. The subject matter of claim 5, wherein said resonator comprises an elastic rod coupled at one end to said oscillator body mass and at the opposite end to said applicator.

10. The subject matter of claim 9, wherein said oscillator is so oriented relative to said elastic rod that said rotating output force of said oscillator body mass turns about an axis transverse to said elastic rod.

11. The subject matter of claim 10, wherein the oscillator is driven at a longitudinal resonant standing wave frequency of the vibratory system consisting of said oscillator, elastic rod, and applicator.

12. The subject matter of claim 5, wherein said resonator comprises an elastic tube coupled at one end portion to said applicator and at the same end portion to said body mass of said oscillator.

13. The subject of claim 12, wherein said oscillator body mass is so oriented relative to said elastic rod that

said rotating output force of said oscillator body mass turns about an axis parallel to the axis of said elastic tube.

14. The subject matter, of claim 13, wherein said means for driving said oscillator operates at a frequency establishing a resonant gyrational standing wave in said tube.

15. The subject matter of claim 5, wherein said resonator comprises a bow spring bar in the general form of an inverted U, said body mass of said oscillator is acoustically coupled to said bow spring bar, and said applicator is coupled to the extremities of said bar.

16. The subject matter of claim 1, wherein said applicator has a pocket open to the work surface, and including means for supplying a cleaning liquid to said pocket.

References Cited in the file of this patent

UNITED STATES PATENTS

2,921,372	Bodine	Jan. 19, 1960
3,015,961	Roney	Jan. 9, 1962