H. S. WILSON.

CARBURETER.

APPLICATION FILED FEB. 5, 1913.

1,116,861. Patented Nov. 10, 1914.

Fig. 1

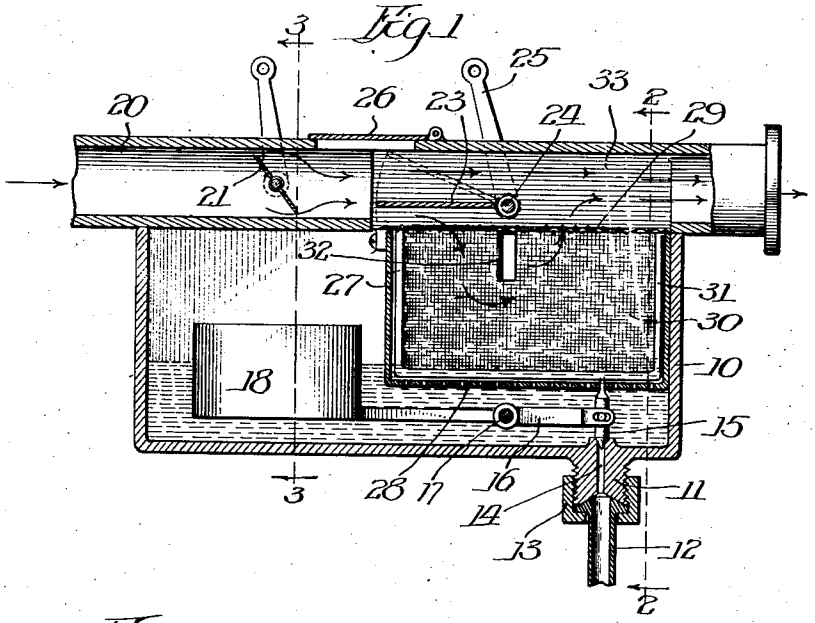

Fig. 2

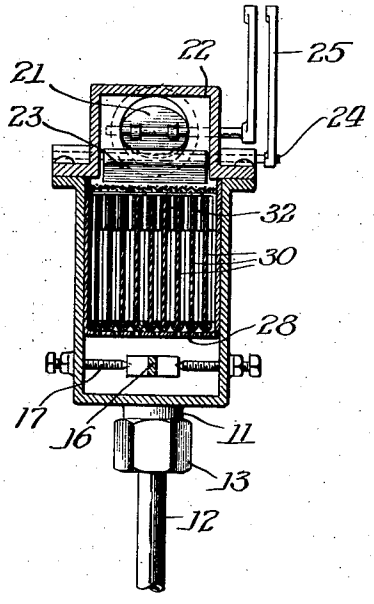

Fig. 3.

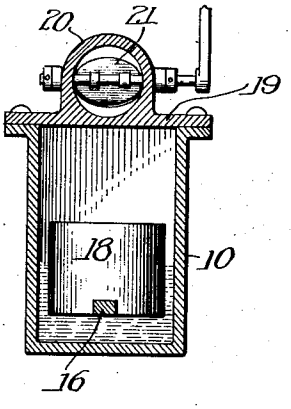

Witnesses:

Fred. C. Davison

Chas. F. Murray

Inventor:

Herbert S. Wilson

By Smithsonian Belt & Fuller

Attys.

UNITED STATES PATENT OFFICE.

HERBERT S. WILSON, OF CHICAGO, ILLINOIS.

CARBURETER.

1,116,861. Specification of Letters Patent. Patented Nov. 10, 1914.

Application filed February 5, 1913. Serial No. 746,270.

To all whom it may concern:

Be it known that I, HERBERT S. WILSON, a citizen of the United States, and resident of Chicago, in the county of Cook and State of Ilinois, have invented certain new and useful Improvements in Carbureters, of which the following is a specification.

My invention relates to carbureters for internal combustion engines.

In all the carbureters with which I am familiar, the supply of combustible fluid to the carbureting or mixing chamber is controlled by means of a needle valve. This is well known to be objectionable in many particulars, one objection being that such a valve must of necessity have a very small opening in order to properly control the supply of fluid and such an opening is easily clogged with small particles of solids which may collect in the fuel container. Furthermore, the adjustment of a needle valve is difficult for the reason that changes in temperature may cause such variation in the fuel supply as will necessitate readjustment.

I have conceived that a valve which shall completely control the supply of combustible fluid to the carbureter is unnecessary and have entirely eliminated the same. In my construction I have provided a chamber through and over which the air for proper mixture may pass, this chamber containing material which constantly holds the combustible fluid, the fluid being maintained in constant readiness for absorption by the air by means of capillary attraction; that is, I prefer to place in the chamber a plurality of strips or sheets of a fibrous, preferably non-combustible material, such as asbestos, the sheets of material being maintained substantially out of contact whereby the incoming air may be permitted to circulate around the sheets and take up the fuel by evaporation as required. In such construction I prefer to locate the throttle valve at a point between the air intake and the carbureting chamber in distinction from those carbureters in which the throttle valve is placed between the carbureting chamber and the engine cylinders.

A theory on which a feature of the present invention rests is that the fuel may be vaporized more easily by passing a portion of the incoming charge of fresh air over the fuel moistened surfaces or preferably over a large area of material which contains the fuel. The fuel thus supplied is actually given off in the form of vapor and small particles of the fuel are not carried in suspension by the force of the incoming charge, depending upon complete vaporization at a later point in the operation. By providing a relatively large area the necessary fuel may be supplied by evaporation in the form of vapor, a much more efficient mixture being secured than is possible by the actual spraying of the fuel into the charge of air. However, if the feature of vaporization by evaporation were alone depended upon the results would be unsatisfactory. It has been found that the mixture which is thus secured is too rich and the variable demands of the present day motor cannot be met. I have found, however, that by providing a deflector at the junction of the air intake and the evaporation chamber I may deflect only a small portion of the incoming charge of air into contact with the fuel moistened surfaces, the remainder of the charge of air passing directly into a mixing chamber where the highly enriched gas may mix with the fresh air to form the proper combustible mixture. Thus variations within wide limits are possible.

In place of the usual needle valve which controls the supply of fluid to the mixing chamber, I provide a simple hinged valve arranged for motion across the path of the incoming air whereby a regulable amount of air is deflected down into the mixing chamber where it may take up the required burden of combustible fuel that will produce with the uncharged air passing over the valves a perfect mixture. The combustible fuel may be maintained at a pre-determined height by means of the usual float controlling the inlet valve.

A carbureter such as just described may be constructed for a fraction of the sum necessary to manufacture a device of the common construction. Furthermore, my carbureter is exceedingly simple, easily controlled by one adjustment and maintains a uniform supply of properly carbureted air irrespective of the position of the throttle.

The invention will be more readily understood by reference to the accompanying drawings, wherein,

Figure 1 is a vertical section through a carbureter constructed in accordance with my invention; Fig. 2 is a transverse section on the line 2—2 of Fig. 1; and Fig. 3 is a similar section on the line 3—3 of Fig. 1.

Referring more particularly to the drawings it will be seen that I employ a casing 10, having an open top and provided with a nipple 11 at the lower end to which may be connected a fuel supply pipe 12, by means of a suitable nut 13. The inlet opening 14 is controlled by a valve 15, secured to a rock arm 16, pivoted at 17, and actuated by means of a float 18. Thereby a uniform level of combustible fluid may be maintained in the chamber 10.

The top of the casing 10 is closed by a cover plate 19, which has formed as a part thereof, a circular pipe 20, in which is pivoted the usual butterfly throttle valve 21. At a point forward of the round portion, the cover plate is enlarged and squared as at 22, within which portion is mounted a flap valve 23, pivoted at 24, and controlled by a lever 25. This flap valve provides the means for controlling the mixture of air and fuel as heretofore described. Also in the member just described and at a point between the throttle valve and the engine cylinders, I provide a back-fire valve 26, which may be merely hinged as shown. Such a valve will normally be maintained tightly on its seat by the partial vacuum within the chamber when the engine is in operation.

Suspended from the cover member 19 is a casing 27, having an open top and a perforated bottom 28. The top of this casing may be advantageously covered with a strip of foraminous material 29. Mounted within the casing 27 are a plurality of strips of a preferably non-combustible absorbent material 30, such as asbestos or cotton or linen, treated with aluminum sulfate, a material being preferred which will not deteriorate by contact with the liquid fuel and which has a high co-efficient of capillarity. These strips of material, in order to be properly supported, are lined on three sides with a stiff material such as shown at 31. These strips are preferably maintained a short distance apart, this distance being controlled by the thickness of the binding material at the edges. It will be seen that the absorbent material has its lower edge constantly projecting into the liquid fuel in the casing 10, and by capillary attraction such fuel is drawn upward, maintaining the material in a saturated condition. The air, as it is drawn in through the intake opening, will pass over and around the saturated strips taking up therefrom a burden of fuel as required. After the portion of air which is directed around the fuel moistened surfaces emerges from the fuel supplying chamber 27, it combines with the uncarbureted air in the mixing chamber 33, which lies just above the fuel supplying chamber.

It may be found desirable in order to insure the proper direction of the charge of air which passes in contact with the fuel moistened surfaces to provide deflectors between the strips of material such as shown in Figs. 1 and 2. These may consist of a single piece of material having downwardly extending legs 32, the legs projecting between the strips of absorbent material. The ends of the pieces of material may be secured to the sides of the evaporating chamber 27.

It is obvious that modifications may be made in the structure herein shown and described, and such modifications as are within the scope of my claims I consider within the spirit of my invention.

I claim:

1. A carbureter comprising a casing having an open top, an air conduit extending across the open top of the casing and in communication with said casing through its open top, a series of absorbent sheets in said casing, means for supplying liquid fuel to the casing, and an air deflector in the air conduit above the open top of the casing.

3. A carbureter comprising a casing having an open top, an air conduit extending across the open top of the casing and in communication with said casing through its open top, a series of absorbent sheets in said casing, means for supplying liquid fuel to the casing, an air deflector in the air conduit above the open top of the casing, and a throttle valve in the air conduit in front of the deflector.

3. A carbureter comprising a casing having an open top, an air conduit extending across the open top of the casing and in communication with said casing through its open top, a series of absorbent sheets in said casing, means for supplying liquid fuel to the casing, an air deflector in the air conduit above the open top of the casing, a throttle valve in the air conduit in front of the deflector, and a back-fire valve between the throttle valve and the deflector.

4. A carbureter comprising a casing, a compartment therein having an open top and a perforate wall affording communication between the casing and the compartment, the casing being provided with an inlet for liquid fuel, a valve controlling the

inlet, a float controlling the valve, a series of upright laterally spaced absorbent sheets in the compartment, an air conduit extending across the casing and communicating through one side with the compartment through its open top, a deflector in the air conduit to direct air from the conduit to the compartment, a throttle valve in the air conduit in front of the deflector, and a back-fire valve for the conduit and located between the throttle valve and the deflector.

HERBERT S. WILSON.

Witnesses:
CHAS. F. MURRAY,
T. D. BUTLER.