(12) UK Patent Application (19) GB (11) 2 071 928 A

(21) Application No **8106568**
(22) Date of filing **3 Mar 1981**
(30) Priority data
(31) **80/08454**
(32) **12 Mar 1980**
(33) **United Kingdom (GB)**
(43) Application published **23 Sep 1981**
(51) **INT CL³ H01R 13/627**
(52) Domestic classification **H2E** CCC **E2A** 413 CAQ
(56) Documents cited
GB 2038568 A
GB 1484627
GB 1411967
GB 973557
GB 639920
GB 577184
EP 0006183 A
(58) Field of search **E2A H2E**

(71) Applicants
AMP Incorporated,
Eisenhower Boulevard,
Harrisburg,
Pennsylvania,
United States of America.
(72) Inventors
Werner Moritz
(74) Agents
R.G. Stuart-Prince,
20 Queensmere,
Slough,
Berkshire, SL1 1YZ.

(54) Electrical connector housing

(57) A housing (12) is provided with a pivotal latching member (21) comprising a pair of parallel arms (22, 22') each having a catch (24, 24') at one end and, at the other end, a finger-engageable release portion (25) extending behind a rear face of the housing. Pivots (23), (23') of the arms snap fit in sockets in the housing and resilient tongues (26), (26') on the housing shell (12) bias the arms (22, 22') to the latching position. Each catch (eg 24', Figure 6) engages with a cooperating latching bar (36') in a second housing (34) compatable with the housing (12) to latch the two housings (12, 34) together. The form of the latching member makes one-hand operation of it possible and hence it is particularly suitable for use in confined spaces. The housing may be used in association with a ballast coil housing for a lighting set (see Figure 7, not shown).

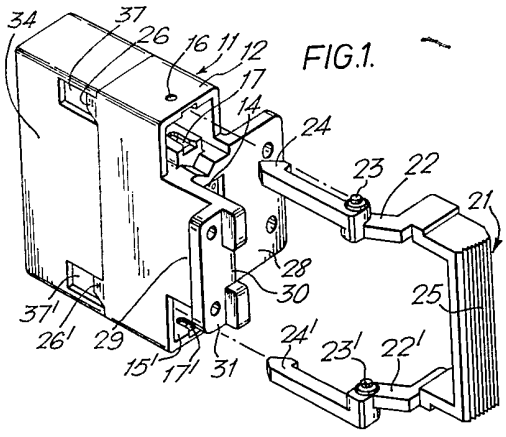

FIG.1.

FIG.6.

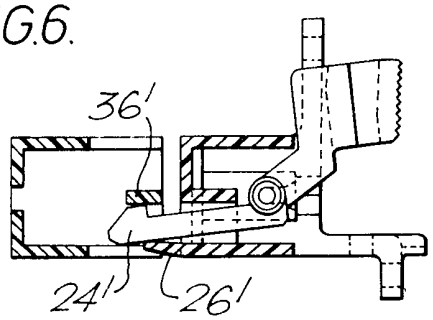

GB 2 071 928 A

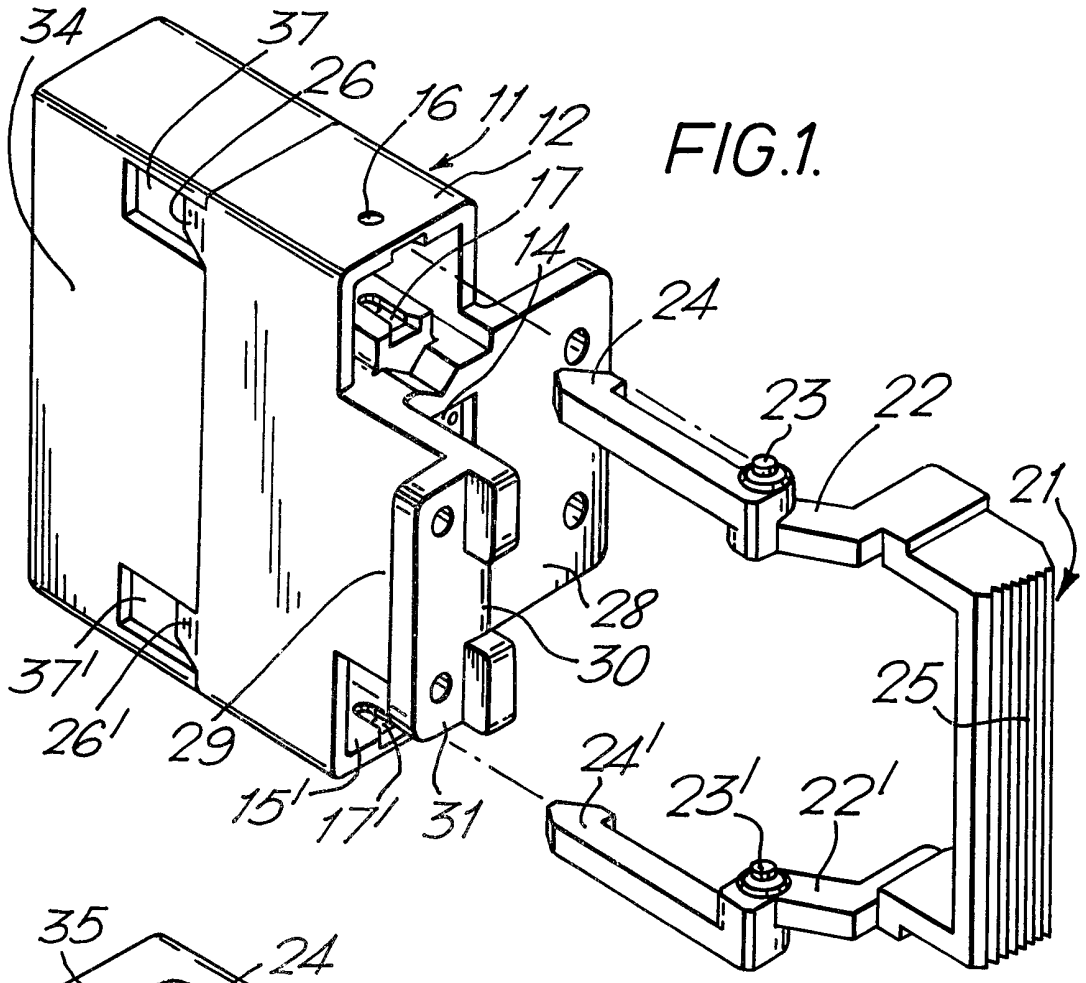
34
37
26
16
11
12
17
14
24
23
22
21
28
30
25
37'
26'
29
15'
17'
31
24'
23'
22'

FIG.1.

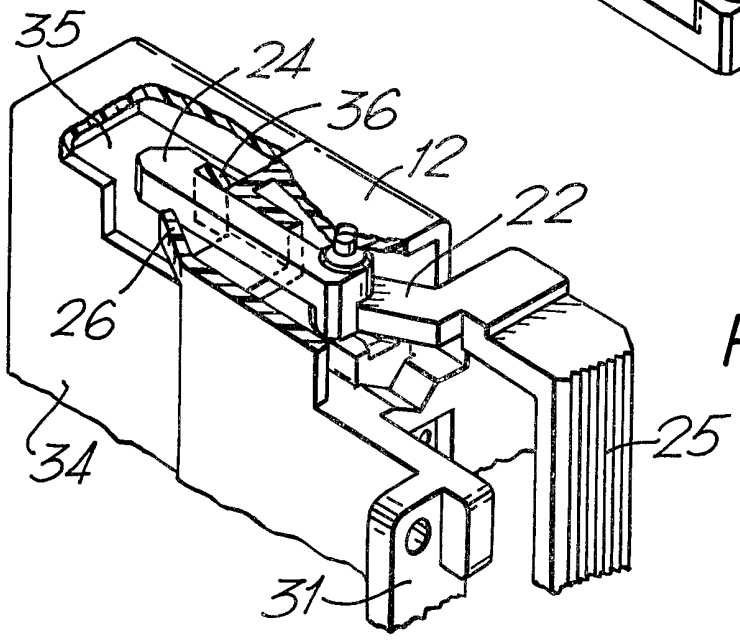
35
24
36
12
22
26
34
25
31

FIG.2.

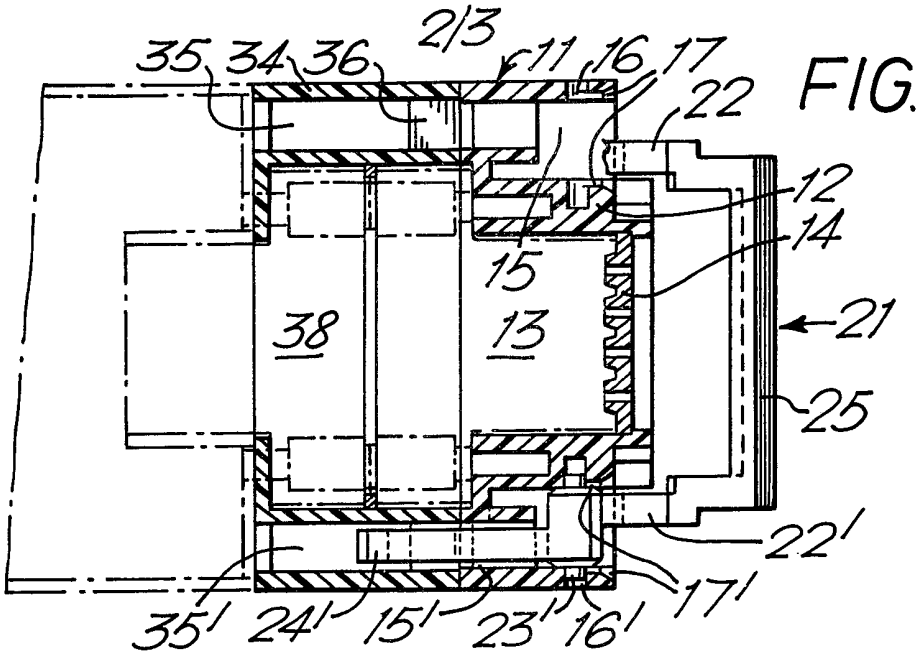

FIG.3.

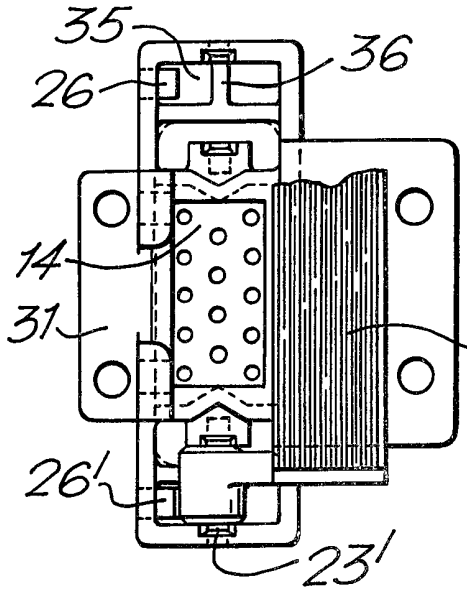

FIG.4.

FIG.8.

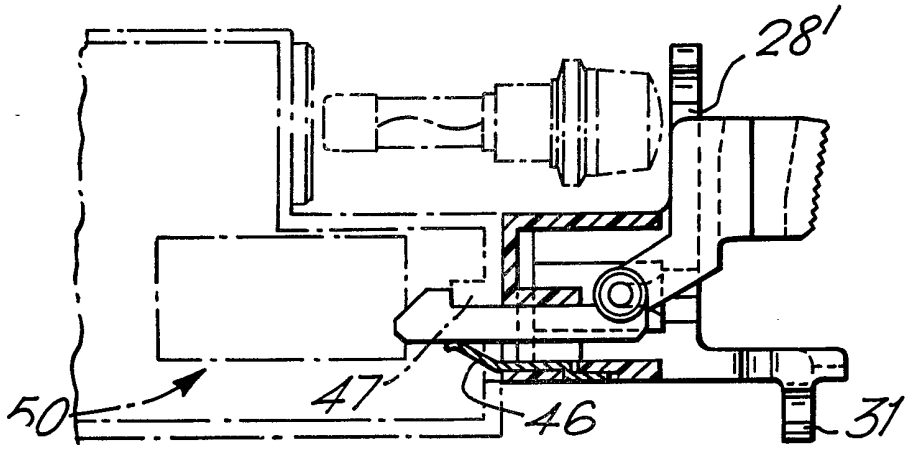

FIG.5.

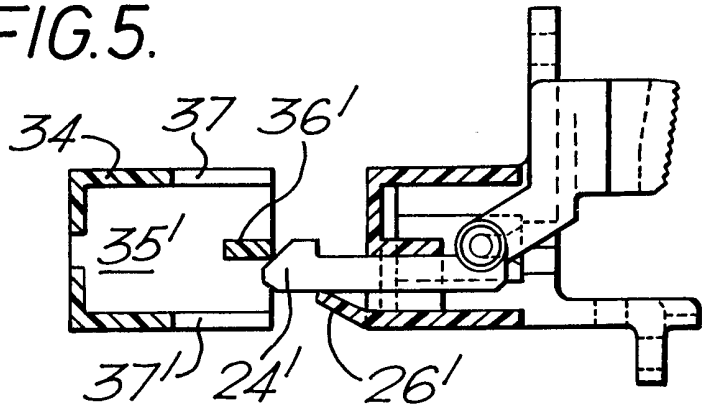

FIG.6.

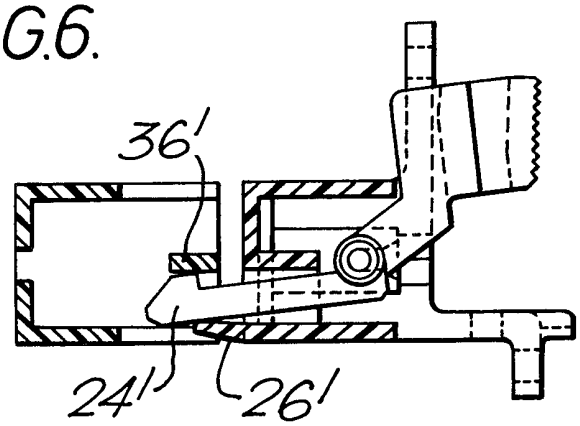

FIG.7.

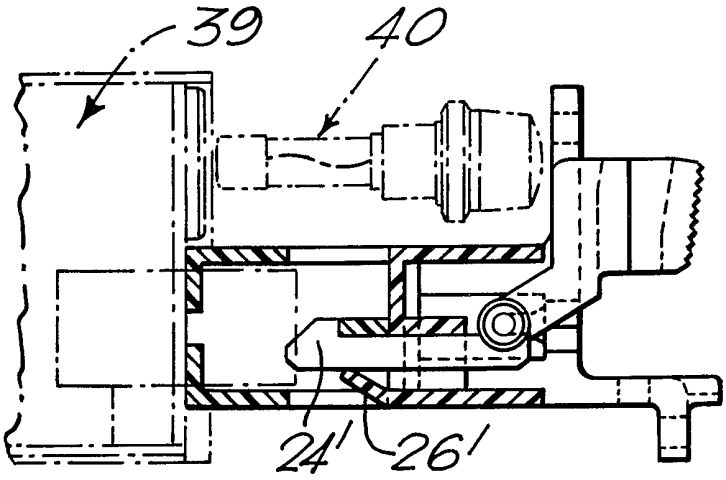

SPECIFICATION

Electrical connector housing

This invention relates to electrical connectors particularly suitable for use in confined spaces.

An electrical connector housing according to the invention comprises a housing shell moulded in one piece of plastics material and defining internally a contact-receiving cavity opening to a mating face of the housing; a latching member comprising an arm mounted between its ends fo pivotal movement on the housing shell between unlatching and latching positions and having a catch at one end projecting from the mating face; and, a finger-engageable release portion at the other end of the arm projecting from a rear face, resilient means being provided on the housing shell to bias the latch member in the latching position.

As the release portion projects from the rear face of the housing manual access is required only to the rear of the housing to operate the latching member.

Preferably, the latching member is mounted as a snap-fit in a socket integrally formed with the housing shell enabling the connector housing to be made from few separate parts.

Contacts anchored in modular insulating blocks are inserted in the housing cavity and the connector housing releasably assembled with another connector housing having complementary contacts by engagement of the catch behind a suitable housing part of the other connector housing with a snap action.

The connector housing of the invention may be assembled with a compatible connector housing having one of a variety of external shapes. The use of alternative latching members having catches of different shapes enables assembly with an even greater variety of connector housings.

The latching member may comprise a pair of parallel arms integrally connected at their other ends by a transverse finger-engageable release portion extending behind the rear face, the arms being pivotally mounted as snap fits to extend through respective tubular sockets integrally formed with the housing shell on opposite sides of the contact-receiving cavity.

The latching arms are protected from inadvertent engagement with other members preventing accidental release of the connector.

Flanges may be formed integrally with the housing shell to project from the rear face transversely and axially of the latching arms, such flanges being adapted to locate wire bundle ties securing lead wires extending from the contacts to the flanges for strain relief.

Release of the latching member may readily be achieved using only one hand and with access only to the rear face by depressing the finger-engageable portion with the thumb when gripping the wire bundle secured to an axially extending flange.

Specific examples of electrical connector housings according to the invention will now be described with reference to the accompanying drawings in which:-

Figure 1 is an exploded perspective view of a first example of a connector housing according to the invention assembled with a compatible connector housing;

Figure 2 is a fragmentary perspective view of the connector housing of the invention partly in cross-section;

Figure 3 is a cross-sectional view of the connector housing assembly with part of the latching member broken away;

Figure 4 is a rear view of the connector housing assembly shown in Figure 3;

Figures 5, 6 and *7* are cross-sectional views of the connector housing of the invention prior to, during and after assembly, respectively; and

Figure 8 is a cross-sectional view of a second example of connector housing according to the invention assembled with an alternative compatible connector housing.

The first example of connector housing 11 shown in Figures 1 to 6 includes a housing shell 12 moulded in one piece of plastics material and defining internally a cavity 13 opening to a mating face and receiving contacts (not shown) anchored in an insulating block 14. The housing shell defines a pair of open ended tubular sockets 15, 15′ extending between mating and rear faces of the housing, one on each side of the cavity 13. Pairs of opposed apertures 16, 16′ are formed in the opposite walls to each socket adjacent the rear face and entry grooves 17, 17′ extend from the rear face into each aperture. Tongues 26, 26′ project inwardly from a wall of each socket at the mating face.

A latching member 21 comprises a pair of parallel arms 22, 22′ formed with catches 24, 24′ at one of their ends and integrally connected together at their other ends by a transverse finger-engageable release bar 25. Intermediate their ends, the arms are provided with trunnions 23, 23′ for receipt as a snap fit in the apertures 16, 16′ respectively to mount the latching member in the connector housing.

Wire supporting flanges 28 and 29 adapted to locate cable ties project transversely and axially from the rear face of the housing, the flange 28 being formed with a central wire-receiving rebate 30 at a free end and a further transverse wire supporting flange 31.

A connector housing compatible with the above described example comprises a housing shell 34 moulded in one piece of plastics material with a pair of tubular sockets 35, 35′ aligned with the sockets 15, 15′ and located on each side of an internal contact-receiving cavity 38. Latching bars 36, 36′ extends across the centres of each socket adjacent a mating face and a wall of the housing shell is formed with cut-outs 37, 37′ aligned with the respective latching bars.

As shown particularly in Figures 5 to 7, the connector housing is assembled with the compatible connector housing by moving their mating faces axially together. Engagement between a cam surface on respective catches 24, 24′ and latching bars 36, 36′ pivots the arms against the detent action of the respective tongues 26, 26′ to permit the catches to ride over the latching arms. The resilience of the

tongues 26, 26' urges the catches to engage behind the latching bars in a snap action, on further movement of the housings together.

As shown in Figure 7, the connector housing 34 may be mounted on a further housing indicated at 39 which may, for example, constitute a ballast coil housing for a lighting set. In this example, sufficient clearance must remain between the flange 28 and the face of the housing 39 to permit replacement of a fuse unit 40.

In an alternative example, shown in Figure 8, resilient tongues 40 are provided by separate metal parts "moulded in" or otherwise mounted in the socket walls of the housing shell. The connector housing of the invention may be assembled with a connector housing 50 of different configuration as indicated.

The connector is particularly suitable for use in confined spaces where manual access to the front and sides of the connector is not possible. The connector may be securely latched onto a mating connector simply by pushing the mating face of the connector against the mating face of the mating connector and release of the connector may be achieved using only one hand to depress the latching bar 25. An additional advantage is that the connector housing is relatively inexpensive to manufacture and assemble requiring few separate parts which can be made by mass production techniques.

CLAIMS

1. An electrical connector comprising a housing shell moulded in one piece of plastics material and defining internally a contact-receiving cavity opening to a mating face of the housing; a latching member comprising an arm mounted between its ends for pivotal movement on the housing shell between unlatching and latching positions and having a catch at one end projecting from the mating face; and, a finger-engageable release portion at the other end of the arm projecting from a rear face, resilient means being provided on the housing shell to bias the latch member in the latching position.

2. An electrical connector according to Claim 1 in which the latching member is mounted as a snap fit in a socket integrally formed with the housing shell enabling the connector housing to be made from few separate parts.

3. An electrical connector according to Claim 1 or Claim 2 in which the latching member comprises a pair of parallel arms integrally connected at their other ends by a transverse finger-engageable release portion extending behind the rear face, the arms being pivotally mounted as snap fits to extend through respective tubular sockets integrally formed with the housing shell on opposite sides of the contact-receiving cavity.

4. An electrical connector according to any one of the preceding claims in which wire guiding flanges are formed integrally with the housing shell to project from the rear face transversely and axially of the latching arms, such flanges being adapted to locate wire bundle ties securing lead wires extending from the contacts to the flanges for strain relief.

5. An electrical connector substantially as described with reference to the accompanying drawings.

Printed for Her Majesty's Stationery Office by Croydon Printing Company Limited, Croydon, Surrey, 1981.
Published by The Patent Office, 25 Southampton Buildings, London, WC2A 1AY, from which copies may be obtained.