(12) INTERNATIONAL APPLICATION PUBLISHED UNDER THE PATENT COOPERATION TREATY (PCT)

(19) World Intellectual Property Organization
International Bureau

(43) International Publication Date
10 February 2022 (10.02.2022)

WIPO | PCT

(10) International Publication Number
WO 2022/031396 A1

(51) International Patent Classification:
H04W 74/08 (2009.01) *H04W 74/00* (2009.01)
H04W 16/28 (2009.01) *H04W 72/12* (2009.01)

(21) International Application Number:
PCT/US2021/040631

(22) International Filing Date:
07 July 2021 (07.07.2021)

(25) Filing Language: English

(26) Publication Language: English

(30) Priority Data:
63/062,059 06 August 2020 (06.08.2020) US

(71) Applicant: **INTEL CORPORATION** [US/US]; 2200 Mission College Blvd., Santa Clara, California 95054 (US).

(72) Inventors: **TALARICO, Salvatore**; 187 Terreno De Flores Circle, Los Gatos, California 95032 (US). **LI, Yingyang**; 8F, Raycom InfoTech Park A, 2 Kexueyuan South Rd, Haidian District, Beijing 100190 (CN). **XIONG, Gang**; 16682 NW Arizona Dr., Beaverton, Oregon 97006 (US). **LEE, Daewon**; 4521 NW 130th Ave., Portland, Oregon 97229 (US). **MOROZOV, Gregory**; Gagarin Ave, 186-27, Nizhny Novgorod, NIZ, 603107 (RU).

(74) Agent: **PERDOK, Monique M.** et al.; SCHWEGMAN LUNDBERG & WOESSNER, P.A., P.O. Box 2938, Minneapolis, Minnesota 55402 (US).

(81) Designated States *(unless otherwise indicated, for every kind of national protection available)*: AE, AG, AL, AM, AO, AT, AU, AZ, BA, BB, BG, BH, BN, BR, BW, BY, BZ, CA, CH, CL, CN, CO, CR, CU, CZ, DE, DJ, DK, DM, DO, DZ, EC, EE, EG, ES, FI, GB, GD, GE, GH, GM, GT, HN, HR, HU, ID, IL, IN, IR, IS, IT, JO, JP, KE, KG, KH, KN, KP, KR, KW, KZ, LA, LC, LK, LR, LS, LU, LY, MA, MD, ME, MG, MK, MN, MW, MX, MY, MZ, NA, NG, NI, NO, NZ, OM, PA, PE, PG, PH, PL, PT, QA, RO, RS, RU, RW, SA, SC, SD, SE, SG, SK, SL, ST, SV, SY, TH, TJ, TM, TN, TR, TT, TZ, UA, UG, US, UZ, VC, VN, WS, ZA, ZM, ZW.

(54) **Title:** DIRECTIONAL LISTEN BEFORE TALK (LBT) PROCEDURE

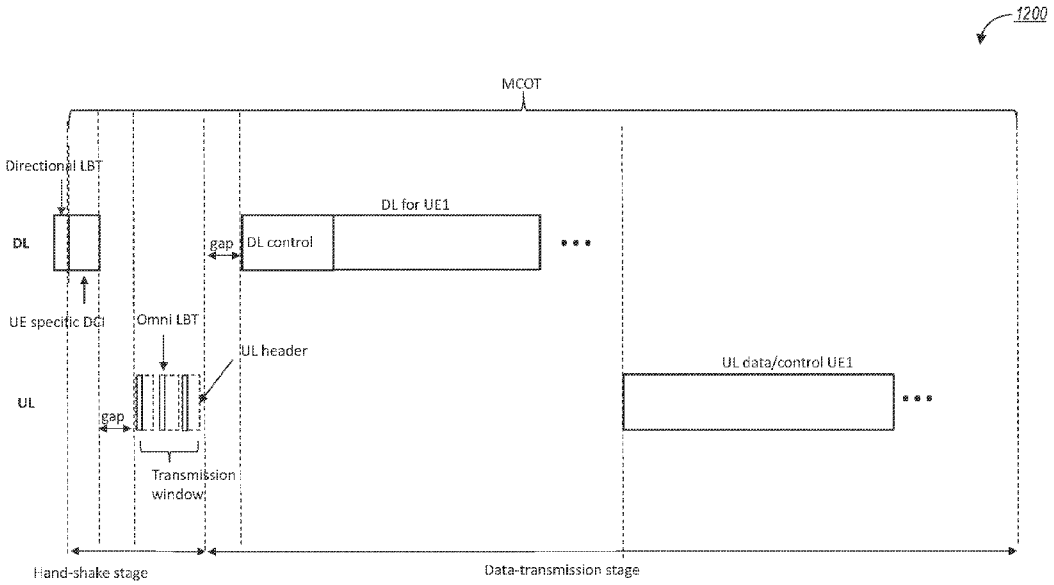

FIG. 12

(57) **Abstract:** An apparatus used in a UE includes processing circuitry and memory. To configure the UE for a directional listen before talk (LBT) procedure, the processing circuitry is to decode downlink (DL) header information received from a base station. The DL header information is associated with a directional LBT procedure performed by the base station. A clear channel assessment (CCA) procedure is performed in response to receiving the DL header information. Uplink (UL) header information is encoded for transmission to the base station based on the CCA procedure.

WO 2022/031396 A1

[Continued on next page]

(84) Designated States *(unless otherwise indicated, for every kind of regional protection available)*: ARIPO (BW, GH, GM, KE, LR, LS, MW, MZ, NA, RW, SD, SL, ST, SZ, TZ, UG, ZM, ZW), Eurasian (AM, AZ, BY, KG, KZ, RU, TJ, TM), European (AL, AT, BE, BG, CH, CY, CZ, DE, DK, EE, ES, FI, FR, GB, GR, HR, HU, IE, IS, IT, LT, LU, LV, MC, MK, MT, NL, NO, PL, PT, RO, RS, SE, SI, SK, SM, TR), OAPI (BF, BJ, CF, CG, CI, CM, GA, GN, GQ, GW, KM, ML, MR, NE, SN, TD, TG).

Published:

— *with international search report (Art. 21(3))*

DIRECTIONAL LISTEN BEFORE TALK (LBT) PROCEDURE

PRIORITY CLAIM

[0001] This application claims the benefit of priority to United States Provisional Patent Application 63/062,059, filed August 6, 2020, and entitled "MECHANISMS TO ENABLE DIRECTIONAL LISTEN BEFORE TALK PROCEDURE," which provisional patent application is incorporated herein by reference in its entirety.

TECHNICAL FIELD

[0002] Aspects pertain to wireless communications. Some aspects relate to wireless networks including 3GPP (Third Generation Partnership Project) networks, 3GPP LTE (Long Term Evolution) networks, 3GPP LTE-A (LTE Advanced) networks, (MulteFire, LTE-U), and fifth-generation (5G) networks including 5G new radio (NR) (or 5G-NR) networks, 5G-LTE networks such as 5G NR unlicensed spectrum (NR-U) networks and other unlicensed networks including Wi-Fi, CBRS (OnGo), etc. Other aspects are directed to directional listen before talk (LBT) procedures, including enabling directional LBT procedures in a 5G system (5GS) including 5GS using wireless communications above 52.6 GHz.

BACKGROUND

[0003] Mobile communications have evolved significantly from early voice systems to today's highly sophisticated integrated communication platform. With the increase in different types of devices communicating with various network devices, usage of 3GPP LTE systems has increased. The penetration of mobile devices (user equipment or UEs) in modern society has continued to drive demand for a wide variety of networked devices in many disparate environments. Fifth-generation (5G) wireless systems are forthcoming and are expected to enable even greater speed, connectivity, and usability. Next generation 5G networks (or NR networks) are expected to increase throughput, coverage, and robustness and reduce latency and operational and capital

expenditures. 5G-NR networks will continue to evolve based on 3GPP LTE-Advanced with additional potential new radio access technologies (RATs) to enrich people's lives with seamless wireless connectivity solutions delivering fast, rich content and services. As current cellular network frequency is saturated, higher frequencies, such as millimeter wave (mmWave) frequency, can be beneficial due to their high bandwidth.

[0004] Potential LTE operation in the unlicensed spectrum includes (and is not limited to) the LTE operation in the unlicensed spectrum via dual connectivity (DC), or DC-based LAA, and the standalone LTE system in the unlicensed spectrum, according to which LTE-based technology solely operates in the unlicensed spectrum without requiring an "anchor" in the licensed spectrum, called MulteFire. MulteFire combines the performance benefits of LTE technology with the simplicity of Wi-Fi-like deployments.

[0005] Further enhanced operation of LTE and NR systems in the licensed, as well as unlicensed spectrum, is expected in future releases and 5G systems. Such enhanced operations can include techniques for enabling a directional LBT procedure in a 5GS.

BRIEF DESCRIPTION OF THE FIGURES

[0006] In the figures, which are not necessarily drawn to scale, like numerals may describe similar components in different views. Like numerals having different letter suffixes may represent different instances of similar components. The figures illustrate generally, by way of example, but not by way of limitation, various aspects discussed in the present document.

[0007] FIG. 1A illustrates an architecture of a network, in accordance with some aspects.

[0008] FIG. 1B and FIG. 1C illustrate a non-roaming 5G system architecture in accordance with some aspects.

[0009] FIG. 2, FIG. 3, and FIG. 4 illustrate various systems, devices, and components that may implement aspects of disclosed embodiments.

[0010] FIG. 5 is an illustration of the over-protectivity of omnidirectional LBT versus directional LBT, according to some embodiments.

[0011] FIG. 6 is an illustration of some scenarios highlighting the drawback of directional LBT.

[0012] FIG. 7 is an illustration of reduced spectral utilization due to the directional nature of the transmissions and reception, combined with directional LBT, according to some embodiments.

[0013] FIG. 8 is an illustration of possible interference increase and limitations during COT sharing, according to some embodiments.

[0014] FIG. 9 illustrates a gNB that uses the opposite beam as that used for transmission to perform LBT, according to some embodiments.

[0015] FIG. 10 illustrates a gNB that uses both the transmission beam and the opposite beam as that used for transmission to perform LBT, according to some embodiments.

[0016] FIG. 11 is a high-level illustration of a two-stage handshake procedure, according to some embodiments.

[0017] FIG. 12 is a high-level illustration of a two-stage handshake procedure with a transmission window for UL header transmission, according to some embodiments.

[0018] FIG. 13 is a high-level illustration of a two-stage DCI approach used within a two-stage handshake procedure, according to some embodiments.

[0019] FIG. 14A and FIG. 14B are high-level illustrations of a two-stage handshake procedure when multiple UEs are multiplexed, according to some embodiments.

[0020] FIG. 15 is a high-level illustration of a two-stage handshake procedure when during the hand-shake stage beam scanning and pairing may be performed, according to some embodiments.

[0021] FIG. 16 is an illustration of coordination between gNBs to speed a CCA process, according to some embodiments.

[0022] FIG. 17 illustrates a block diagram of a communication device such as an evolved Node-B (eNB), a new generation Node-B (gNB) (or another RAN node), an access point (AP), a wireless station (STA), a mobile station (MS), or a user equipment (UE), in accordance with some aspects.

DETAILED DESCRIPTION

[0023] The following description and the drawings sufficiently illustrate aspects to enable those skilled in the art to practice them. Other aspects may incorporate structural, logical, electrical, process, and other changes. Portions and features of some aspects may be included in or substituted for, those of other aspects. Aspects outlined in the claims encompass all available equivalents of those claims.

[0024] FIG. 1A illustrates an architecture of a network in accordance with some aspects. The network 140A is shown to include user equipment (UE) 101 and UE 102. The UEs 101 and 102 are illustrated as smartphones (e.g., handheld touchscreen mobile computing devices connectable to one or more cellular networks) but may also include any mobile or non-mobile computing device, such as Personal Data Assistants (PDAs), pagers, laptop computers, desktop computers, wireless handsets, drones, or any other computing device including a wired and/or wireless communications interface. The UEs 101 and 102 can be collectively referred to herein as UE 101, and UE 101 can be used to perform one or more of the techniques disclosed herein.

[0025] Any of the radio links described herein (e.g., as used in the network 140A or any other illustrated network) may operate according to any exemplary radio communication technology and/or standard.

[0026] LTE and LTE-Advanced are standards for wireless communications of high-speed data for UE such as mobile telephones. In LTE-Advanced and various wireless systems, carrier aggregation is a technology according to which multiple carrier signals operating on different frequencies may be used to carry communications for a single UE, thus increasing the bandwidth available to a single device. In some aspects, carrier aggregation may be used where one or more component carriers operate on unlicensed frequencies.

[0027] Aspects described herein can be used in the context of any spectrum management scheme including, for example, dedicated licensed spectrum, unlicensed spectrum, (licensed) shared spectrum (such as Licensed Shared Access (LSA) in 2.3-2.4 GHz, 3.4-3.6 GHz, 3.6-3.8 GHz, and further

frequencies and Spectrum Access System (SAS) in 3.55-3.7 GHz and further frequencies).

[0028] Aspects described herein can also be applied to different Single Carrier or OFDM flavors (CP-OFDM, SC-FDMA, SC-OFDM, filter bank-based multicarrier (FBMC), OFDMA, etc.) and in particular 3GPP NR (New Radio) by allocating the OFDM carrier data bit vectors to the corresponding symbol resources.

[0029] In some aspects, any of the UEs 101 and 102 can comprise an Internet-of-Things (IoT) UE or a Cellular IoT (CIoT) UE, which can comprise a network access layer designed for low-power IoT applications utilizing short-lived UE connections. In some aspects, any of the UEs 101 and 102 can include a narrowband (NB) IoT UE (e.g., such as an enhanced NB-IoT (eNB-IoT) UE and Further Enhanced (FeNB-IoT) UE). An IoT UE can utilize technologies such as machine-to-machine (M2M) or machine-type communications (MTC) for exchanging data with an MTC server or device via a public land mobile network (PLMN), Proximity-Based Service (ProSe), or device-to-device (D2D) communication, sensor networks, or IoT networks. The M2M or MTC exchange of data may be a machine-initiated exchange of data. An IoT network includes interconnecting IoT UEs, which may include uniquely identifiable embedded computing devices (within the Internet infrastructure), with short-lived connections. The IoT UEs may execute background applications (e.g., keep-alive messages, status updates, etc.) to facilitate the connections of the IoT network.

[0030] In some aspects, any of the UEs 101 and 102 can include enhanced MTC (eMTC) UEs or further enhanced MTC (FeMTC) UEs.

[0031] The UEs 101 and 102 may be configured to connect, e.g., communicatively couple, with a radio access network (RAN) 110. The RAN 110 may be, for example, a Universal Mobile Telecommunications System (UMTS), an Evolved Universal Terrestrial Radio Access Network (E-UTRAN), a NextGen RAN (NG RAN), or some other type of RAN. The UEs 101 and 102 utilize connections 103 and 104, respectively, each of which comprises a physical communications interface or layer (discussed in further detail below); in this example, the connections 103 and 104 are illustrated as an air interface to

enable communicative coupling and can be consistent with cellular communications protocols, such as a Global System for Mobile Communications (GSM) protocol, a code-division multiple access (CDMA) network protocol, a Push-to-Talk (PTT) protocol, a PTT over Cellular (POC) protocol, a Universal Mobile Telecommunications System (UMTS) protocol, a 3GPP Long Term Evolution (LTE) protocol, a fifth-generation (5G) protocol, a New Radio (NR) protocol, and the like.

[0032] In an aspect, the UEs 101 and 102 may further directly exchange communication data via a ProSe interface 105. The ProSe interface 105 may alternatively be referred to as a sidelink interface comprising one or more logical channels, including but not limited to a Physical Sidelink Control Channel (PSCCH), a Physical Sidelink Shared Channel (PSSCH), a Physical Sidelink Discovery Channel (PSDCH), and a Physical Sidelink Broadcast Channel (PSBCH).

[0033] The UE 102 is shown to be configured to access an access point (AP) 106 via connection 107. The connection 107 can comprise a local wireless connection, such as, for example, a connection consistent with any IEEE 802.11 protocol, according to which the AP 106 can comprise a wireless fidelity (WiFi®) router. In this example, the AP 106 is shown to be connected to the Internet without connecting to the core network of the wireless system (described in further detail below).

[0034] The RAN 110 can include one or more access nodes that enable connections 103 and 104. These access nodes (ANs) can be referred to as base stations (BSs), NodeBs, evolved NodeBs (eNBs), Next Generation NodeBs (gNBs), RAN network nodes, and the like, and can comprise ground stations (e.g., terrestrial access points) or satellite stations providing coverage within a geographic area (e.g., a cell). In some aspects, the communication nodes 111 and 112 can be transmission/reception points (TRPs). In instances when the communication nodes 111 and 112 are NodeBs (e.g., eNBs or gNBs), one or more TRPs can function within the communication cell of the NodeBs. The RAN 110 may include one or more RAN nodes for providing macrocells, e.g., macro RAN node 111, and one or more RAN nodes for providing femtocells or picocells (e.g., cells having smaller coverage areas, smaller user capacity, or

higher bandwidth compared to macrocells), e.g., low power (LP) RAN node 112 or an unlicensed spectrum based secondary RAN node 112.

[0035] Any of the RAN nodes 111 and 112 can terminate the air interface protocol and can be the first point of contact for the UEs 101 and 102. In some aspects, any of the RAN nodes 111 and 112 can fulfill various logical functions for the RAN 110 including, but not limited to, radio network controller (RNC) functions such as radio bearer management, uplink and downlink dynamic radio resource management, and data packet scheduling, and mobility management. In an example, any of the nodes 111 and/or 112 can be a new generation Node-B (gNB), an evolved node-B (eNB), or another type of RAN node.

[0036] The RAN 110 is shown to be communicatively coupled to a core network (CN) 120 via an S1 interface 113. In aspects, the CN 120 may be an evolved packet core (EPC) network, a NextGen Packet Core (NPC) network, or some other type of CN (e.g., as illustrated in reference to FIGS. 1B-1C). In this aspect, the S1 interface 113 is split into two parts: the S1-U interface 114, which carries user traffic data between the RAN nodes 111 and 112 and the serving gateway (S-GW) 122, and the S1-mobility management entity (MME) interface 115, which is a signaling interface between the RAN nodes 111 and 112 and MMEs 121.

[0037] In this aspect, the CN 120 comprises the MMEs 121, the S-GW 122, the Packet Data Network (PDN) Gateway (P-GW) 123, and a home subscriber server (HSS) 124. The MMEs 121 may be similar in function to the control plane of legacy Serving General Packet Radio Service (GPRS) Support Nodes (SGSN). The MMEs 121 may manage mobility aspects in access such as gateway selection and tracking area list management. The HSS 124 may comprise a database for network users, including subscription-related information to support the network entities' handling of communication sessions. The CN 120 may comprise one or several HSSs 124, depending on the number of mobile subscribers, on the capacity of the equipment, on the organization of the network, etc. For example, the HSS 124 can provide support for routing/roaming, authentication, authorization, naming/addressing resolution, location dependencies, etc.

[0038] The S-GW 122 may terminate the S1 interface 113 towards the RAN 110, and route data packets between the RAN 110 and the CN 120. In addition, the S-GW 122 may be a local mobility anchor point for inter-RAN node handovers and also may provide an anchor for inter-3GPP mobility. Other responsibilities of the S-GW 122 may include lawful intercept, charging, and some policy enforcement.

[0039] The P-GW 123 may terminate an SGi interface toward a PDN. The P-GW 123 may route data packets between the EPC network 120 and external networks such as a network including the application server 184 (alternatively referred to as application function (AF)) via an Internet Protocol (IP) interface 125. The P-GW 123 can also communicate data to other external networks 131A, which can include the Internet, IP multimedia subsystem (IPS) network, and other networks. Generally, the application server 184 may be an element offering applications that use IP bearer resources with the core network (e.g., UMTS Packet Services (PS) domain, LTE PS data services, etc.). In this aspect, the P-GW 123 is shown to be communicatively coupled to an application server 184 via an IP interface 125. The application server 184 can also be configured to support one or more communication services (e.g., Voice-over-Internet Protocol (VoIP) sessions, PTT sessions, group communication sessions, social networking services, etc.) for the UEs 101 and 102 via the CN 120.

[0040] The P-GW 123 may further be a node for policy enforcement and charging data collection. Policy and Charging Rules Function (PCRF) 126 is the policy and charging control element of the CN 120. In a non-roaming scenario, in some aspects, there may be a single PCRF in the Home Public Land Mobile Network (HPLMN) associated with a UE's Internet Protocol Connectivity Access Network (IP-CAN) session. In a roaming scenario with a local breakout of traffic, there may be two PCRFs associated with a UE's IP-CAN session: a Home PCRF (H-PCRF) within an HPLMN and a Visited PCRF (V-PCRF) within a Visited Public Land Mobile Network (VPLMN). The PCRF 126 may be communicatively coupled to the application server 184 via the P-GW 123.

[0041] In some aspects, the communication network 140A can be an IoT network or a 5G network, including a 5G new radio network using

communications in the licensed (5G NR) and the unlicensed (5G NR-U) spectrum. One of the current enablers of IoT is the narrowband-IoT (NB-IoT).

[0042] An NG system architecture can include the RAN 110 and a 5G network core (5GC) 120. The NG-RAN 110 can include a plurality of nodes, such as gNBs and NG-eNBs. The core network 120 (e.g., a 5G core network or 5GC) can include an access and mobility function (AMF) and/or a user plane function (UPF). The AMF and the UPF can be communicatively coupled to the gNBs and the NG-eNBs via NG interfaces. More specifically, in some aspects, the gNBs and the NG-eNBs can be connected to the AMF by NG-C interfaces, and to the UPF by NG-U interfaces. The gNBs and the NG-eNBs can be coupled to each other via Xn interfaces.

[0043] In some aspects, the NG system architecture can use reference points between various nodes as provided by 3GPP Technical Specification (TS) 23.501 (e.g., V15.4.0, 2018-12). In some aspects, each of the gNBs and the NG-eNBs can be implemented as a base station, a mobile edge server, a small cell, a home eNB, a RAN network node, and so forth. In some aspects, a gNB can be a master node (MN) and NG-eNB can be a secondary node (SN) in a 5G architecture. In some aspects, the master/primary node may operate in a licensed band and the secondary node may operate in an unlicensed band.

[0044] FIG. 1B illustrates a non-roaming 5G system architecture in accordance with some aspects. Referring to FIG. 1B, there is illustrated a 5G system architecture 140B in a reference point representation. More specifically, UE 102 can be in communication with RAN 110 as well as one or more other 5G core (5GC) network entities. The 5G system architecture 140B includes a plurality of network functions (NFs), such as access and mobility management function (AMF) 132, session management function (SMF) 136, policy control function (PCF) 148, application function (AF) 150, user plane function (UPF) 134, network slice selection function (NSSF) 142, authentication server function (AUSF) 144, and unified data management (UDM)/home subscriber server (HSS) 146. The UPF 134 can provide a connection to a data network (DN) 152, which can include, for example, operator services, Internet access, or third-party services. The AMF 132 can be used to manage access control and mobility and can also include network slice selection functionality. The SMF 136 can be

configured to set up and manage various sessions according to network policy. The UPF 134 can be deployed in one or more configurations according to the desired service type. The PCF 148 can be configured to provide a policy framework using network slicing, mobility management, and roaming (similar to PCRF in a 4G communication system). The UDM can be configured to store subscriber profiles and data (similar to an HSS in a 4G communication system).

[0045] In some aspects, the 5G system architecture 140B includes an IP multimedia subsystem (IMS) 168B as well as a plurality of IP multimedia core network subsystem entities, such as call session control functions (CSCFs). More specifically, the IMS 168B includes a CSCF, which can act as a proxy CSCF (P-CSCF) 162BE, a serving CSCF (S-CSCF) 164B, an emergency CSCF (E-CSCF) (not illustrated in FIG. 1B), or interrogating CSCF (I-CSCF) 166B. The P-CSCF 162B can be configured to be the first contact point for the UE 102 within the IM subsystem (IMS) 168B. The S-CSCF 164B can be configured to handle the session states in the network, and the E-CSCF can be configured to handle certain aspects of emergency sessions such as routing an emergency request to the correct emergency center or PSAP. The I-CSCF 166B can be configured to function as the contact point within an operator's network for all IMS connections destined to a subscriber of that network operator, or a roaming subscriber currently located within that network operator's service area. In some aspects, the I-CSCF 166B can be connected to another IP multimedia network 170E, e.g. an IMS operated by a different network operator.

[0046] In some aspects, the UDM/HSS 146 can be coupled to an application server 160E, which can include a telephony application server (TAS) or another application server (AS). The AS 160B can be coupled to the IMS 168B via the S-CSCF 164B or the I-CSCF 166B.

[0047] A reference point representation shows that interaction can exist between corresponding NF services. For example, FIG. 1B illustrates the following reference points: N1 (between the UE 102 and the AMF 132), N2 (between the RAN 110 and the AMF 132), N3 (between the RAN 110 and the UPF 134), N4 (between the SMF 136 and the UPF 134), N5 (between the PCF 148 and the AF 150, not shown), N6 (between the UPF 134 and the DN 152), N7 (between the SMF 136 and the PCF 148, not shown), N8 (between the UDM

146 and the AMF 132, not shown), N9 (between two UPFs 134, not shown), N10 (between the UDM 146 and the SMF 136, not shown), N11 (between the AMF 132 and the SMF 136, not shown), N12 (between the AUSF 144 and the AMF 132, not shown), N13 (between the AUSF 144 and the UDM 146, not shown), N14 (between two AMFs 132, not shown), N15 (between the PCF 148 and the AMF 132 in case of a non-roaming scenario, or between the PCF 148 and a visited network and AMF 132 in case of a roaming scenario, not shown), N16 (between two SMFs, not shown), and N22 (between AMF 132 and NSSF 142, not shown). Other reference point representations not shown in FIG. 1B can also be used.

[0048] FIG. 1C illustrates a 5G system architecture 140C and a service-based representation. In addition to the network entities illustrated in FIG. 1B, system architecture 140C can also include a network exposure function (NEF) 154 and a network repository function (NRF) 156. In some aspects, 5G system architectures can be service-based and interaction between network functions can be represented by corresponding point-to-point reference points Ni or as service-based interfaces.

[0049] In some aspects, as illustrated in FIG. 1C, service-based representations can be used to represent network functions within the control plane that enable other authorized network functions to access their services. In this regard, 5G system architecture 140C can include the following service-based interfaces: Namf 158H (a service-based interface exhibited by the AMF 132), Nsmf 158I (a service-based interface exhibited by the SMF 136), Nnef 158B (a service-based interface exhibited by the NEF 154), Npcf 158D (a service-based interface exhibited by the PCF 148), a Nudm 158E (a service-based interface exhibited by the UDM 146), Naf 158F (a service-based interface exhibited by the AF 150), Nnrf 158C (a service-based interface exhibited by the NRF 156), Nnssf 158A (a service-based interface exhibited by the NSSF 142), Nausf 158G (a service-based interface exhibited by the AUSF 144). Other service-based interfaces (e.g., Nudr, N5g-eir, and Nudsf) not shown in FIG. 1C can also be used.

[0050] FIG. 2, FIG. 3, and FIG. 4 illustrate various systems, devices, and components that may implement aspects of disclosed embodiments.

[0051] FIG. 2 illustrates a network 200 in accordance with various embodiments. The network 200 may operate in a manner consistent with 3GPP technical specifications for LTE or 5G/NR systems. However, the example embodiments are not limited in this regard and the described embodiments may apply to other networks that benefit from the principles described herein, such as future 3GPP systems, or the like.

[0052] The network 200 may include a UE 202, which may include any mobile or non-mobile computing device designed to communicate with a RAN 204 via an over-the-air connection. The UE 202 may be, but is not limited to, a smartphone, tablet computer, wearable computing device, desktop computer, laptop computer, in-vehicle infotainment, in-car entertainment device, instrument cluster, head-up display device, onboard diagnostic device, dashtop mobile equipment, mobile data terminal, electronic engine management system, electronic/engine control unit, electronic/engine control module, embedded system, sensor, microcontroller, control module, engine management system, networked appliance, machine-type communication device, M2M or D2D device, IoT device, etc.

[0053] In some embodiments, the network 200 may include a plurality of UEs coupled directly with one another via a sidelink interface. The UEs may be M2M/D2D devices that communicate using physical sidelink channels such as but not limited to, PSBCH, PSDCH, PSSCH, PSCCH, PSFCH, etc.

[0054] In some embodiments, the UE 202 may additionally communicate with an AP 206 via an over-the-air connection. The AP 206 may manage a WLAN connection, which may serve to offload some/all network traffic from the RAN 204. The connection between the UE 202 and the AP 206 may be consistent with any IEEE 802.11 protocol, wherein the AP 206 could be a wireless fidelity (Wi-Fi®) router. In some embodiments, the UE 202, RAN 204, and AP 206 may utilize cellular-WLAN aggregation (for example, LWA/LWIP). Cellular-WLAN aggregation may involve the UE 202 being configured by the RAN 204 to utilize both cellular radio resources and WLAN resources.

[0055] The RAN 204 may include one or more access nodes, for example, access node (AN) 208. AN 208 may terminate air-interface protocols

for the UE 202 by providing access stratum protocols including RRC, Packet Data Convergence Protocol (PDCP), Radio Link Control (RLC), MAC, and L1 protocols. In this manner, the AN 208 may enable data/voice connectivity between the core network (CN) 220 and the UE 202. In some embodiments, the AN 208 may be implemented in a discrete device or as one or more software entities running on server computers as part of, for example, a virtual network, which may be referred to as a CRAN or virtual baseband unit pool. The AN 208 be referred to as a BS, gNB, RAN node, eNB, ng-eNB, NodeB, RSU, TRxP, TRP, etc. The AN 208 may be a macrocell base station or a low-power base station for providing femtocells, picocells, or other like cells having smaller coverage areas, smaller user capacity, or higher bandwidth compared to macrocells.

[0056] In embodiments in which the RAN 204 includes a plurality of ANs, they may be coupled with one another via an X2 interface (if the RAN 204 is an LTE RAN) or an Xn interface (if the RAN 204 is a 5G RAN). The X2/Xn interfaces, which may be separated into control/user plane interfaces in some embodiments, may allow the ANs to communicate information related to handovers, data/context transfers, mobility, load management, interference coordination, etc.

[0057] The ANs of the RAN 204 may each manage one or more cells, cell groups, component carriers, etc. to provide the UE 202 with an air interface for network access. The UE 202 may be simultaneously connected with a plurality of cells provided by the same or different ANs of the RAN 204. For example, the UE 202 and RAN 204 may use carrier aggregation to allow the UE 202 to connect with a plurality of component carriers, each corresponding to a Pcell or Scell. In dual connectivity scenarios, a first AN may be a master node that provides an MCG and a second AN may be a secondary node that provides an SCG. The first/second ANs may be any combination of eNB, gNB, ng-eNB, etc.

[0058] The RAN 204 may provide the air interface over a licensed spectrum or an unlicensed spectrum. To operate in the unlicensed spectrum, the nodes may use LAA, eLAA, and/or feLAA mechanisms based on CA technology with PCells/Scells. Before accessing the unlicensed spectrum, the

nodes may perform medium/carrier-sensing operations based on, for example, a listen-before-talk (LBT) protocol.

[0059] In V2X scenarios, the UE 202 or AN 208 may be or act as a roadside unit (RSU), which may refer to any transportation infrastructure entity used for V2X communications. An RSU may be implemented in or by a suitable AN or a stationary (or relatively stationary) UE. An RSU implemented in or by: a UE may be referred to as a "UE-type RSU"; an eNB may be referred to as an "eNB-type RSU"; a gNB may be referred to as a "gNB-type RSU"; and the like. In one example, an RSU is a computing device coupled with radio frequency circuitry located on a roadside that provides connectivity support to passing vehicle UEs. The RSU may also include internal data storage circuitry to store intersection map geometry, traffic statistics, media, as well as applications/software to sense and control ongoing vehicular and pedestrian traffic. The RSU may provide very low latency communications required for high-speed events, such as crash avoidance, traffic warnings, and the like. Additionally, or alternatively, the RSU may provide other cellular/WLAN communications services. The components of the RSU may be packaged in a weatherproof enclosure suitable for outdoor installation and may include a network interface controller to provide a wired connection (e.g., Ethernet) to a traffic signal controller or a backhaul network.

[0060] In some embodiments, the RAN 204 may be an LTE RAN 210 with eNBs, for example, eNB 212. The LTE RAN 210 may provide an LTE air interface with the following characteristics: sub-carrier spacing (SCS) of 15 kHz; CP-OFDM waveform for downlink (DL) and SC-FDMA waveform for uplink (UL); turbo codes for data and TBCC for control; etc. The LTE air interface may rely on CSI-RS for CSI acquisition and beam management; PDSCH/PDCCH DMRS for PDSCH/PDCCH demodulation; and CRS for cell search and initial acquisition, channel quality measurements, and channel estimation for coherent demodulation/detection at the UE. The LTE air interface may operate on sub-6 GHz bands.

[0061] In some embodiments, the RAN 204 may be an NG-RAN 214 with gNBs, for example, gNB 216, or ng-eNBs, for example, ng-eNB 218. The gNB 216 may connect with 5G-enabled UEs using a 5G NR interface. The gNB

216 may connect with a 5G core through an NG interface, which may include an N2 interface or an N3 interface. The ng-eNB 218 may also connect with the 5G core through an NG interface but may connect with a UE via an LTE air interface. The gNB 216 and the ng-eNB 218 may connect over an Xn interface.

[0062] In some embodiments, the NG interface may be split into two parts, an NG user plane (NG-U) interface, which carries traffic data between the nodes of the NG-RAN 214 and a UPF 248 (e.g., N3 interface), and an NG control plane (NG-C) interface, which is a signaling interface between the nodes of the NG-RAN214 and an AMF 244 (e.g., N2 interface).

[0063] The NG-RAN 214 may provide a 5G-NR air interface with the following characteristics: variable SCS; CP-OFDM for DL, CP-OFDM and DFT-s-OFDM for UL; polar, repetition, simplex, and Reed-Muller codes for control and LDPC for data. The 5G-NR air interface may rely on CSI-RS, PDSCH/PDCCH DMRS similar to the LTE air interface. The 5G-NR air interface may not use a CRS but may use PBCH DMRS for PBCH demodulation; PTRS for phase tracking for PDSCH and tracking reference signal for time tracking. The 5G-NR air interface may operate on FR1 bands that include sub-6 GHz bands or FR2 bands that include bands from 24.25 GHz to 52.6 GHz. The 5G-NR air interface may include an SSB that is an area of a downlink resource grid that includes PSS/SSS/PBCH.

[0064] In some embodiments, the 5G-NR air interface may utilize BWPs (bandwidth parts) for various purposes. For example, BWP can be used for dynamic adaptation of the SCS. For example, the UE 202 can be configured with multiple BWPs where each BWP configuration has a different SCS. When a BWP change is indicated to the UE 202, the SCS of the transmission is changed as well. Another use case example of BWP is related to power saving. In particular, multiple BWPs can be configured for the UE 202 with different amounts of frequency resources (for example, PRBs) to support data transmission under different traffic loading scenarios. A BWP containing a smaller number of PRBs can be used for data transmission with a small traffic load while allowing power saving at the UE 202 and in some cases at the gNB 216. A BWP containing a larger number of PRBs can be used for scenarios with higher traffic loads.

[0065] The RAN 204 is communicatively coupled to CN 220 that includes network elements to provide various functions to support data and telecommunications services to customers/subscribers (for example, users of UE 202). The components of the CN 220 may be implemented in one physical node or separate physical nodes. In some embodiments, NFV may be utilized to virtualize any or all of the functions provided by the network elements of the CN 220 onto physical compute/storage resources in servers, switches, etc. A logical instantiation of the CN 220 may be referred to as a network slice, and a logical instantiation of a portion of the CN 220 may be referred to as a network sub-slice.

[0066] In some embodiments, the CN 220 may be connected to the LTE radio network as part of the Enhanced Packet System (EPS) 222, which may also be referred to as an EPC (or enhanced packet core). The EPC 222 may include MME 224, SGW 226, SGSN 228, HSS 230, PGW 232, and PCRF 234 coupled with one another over interfaces (or "reference points") as shown. Functions of the elements of the EPC 222 may be briefly introduced as follows.

[0067] The MME 224 may implement mobility management functions to track the current location of the UE 202 to facilitate paging, bearer activation/deactivation, handovers, gateway selection, authentication, etc.

[0068] The SGW 226 may terminate an S1 interface toward the RAN and route data packets between the RAN and the EPC 222. The SGW 226 may be a local mobility anchor point for inter-RAN node handovers and also may provide an anchor for inter-3GPP mobility. Other responsibilities may include lawful intercept, charging, and some policy enforcement.

[0069] The SGSN 228 may track the location of the UE 202 and perform security functions and access control. In addition, the SGSN 228 may perform inter-EPC node signaling for mobility between different RAT networks; PDN and S-GW selection as specified by MME 224; MME selection for handovers; etc. The S3 reference point between the MME 224 and the SGSN 228 may enable user and bearer information exchange for inter-3GPP access network mobility in idle/active states.

[0070] The HSS 230 may include a database for network users, including subscription-related information to support the network entities' handling of

communication sessions. The HSS 230 can provide support for routing/roaming, authentication, authorization, naming/addressing resolution, location dependencies, etc. An S6a reference point between the HSS 230 and the MME 224 may enable the transfer of subscription and authentication data for authenticating/authorizing user access to the LTE CN 220.

[0071] The PGW 232 may terminate an SGi interface toward a data network (DN) 236 that may include an application/content server 238. The PGW 232 may route data packets between the LTE CN 222 and the data network 236. The PGW 232 may be coupled with the SGW 226 by an S5 reference point to facilitate user plane tunneling and tunnel management. The PGW 232 may further include a node for policy enforcement and charging data collection (for example, PCEF). Additionally, the SGi reference point between the PGW 232 and the data network 236 may be an operator external public, a private PDN, or an intra-operator packet data network, for example, for provision of IMS services. The PGW 232 may be coupled with a PCRF 234 via a Gx reference point.

[0072] The PCRF 234 is the policy and charging control element of the LTE CN 222. The PCRF 234 may be communicatively coupled to the app/content server 238 to determine appropriate QoS and charging parameters for service flows. The PCRF 232 may provision associated rules into a PCEF (via Gx reference point) with appropriate TFT and QCI.

[0073] In some embodiments, the CN 220 may be a 5GC 240. The 5GC 240 may include an AUSF 242, AMF 244, SMF 246, UPF 248, NSSF 250, NEF 252, NRF 254, PCF 256, UDM 258, and AF 260 coupled with one another over interfaces (or "reference points") as shown. Functions of the elements of the 5GC 240 may be briefly introduced as follows.

[0074] The AUSF 242 may store data for authentication of UE 202 and handle authentication-related functionality. The AUSF 242 may facilitate a common authentication framework for various access types. In addition to communicating with other elements of the 5GC 240 over reference points as shown, the AUSF 242 may exhibit a Nausf service-based interface.

[0075] The AMF 244 may allow other functions of the 5GC 240 to communicate with the UE 202 and the RAN 204 and to subscribe to

notifications about mobility events with respect to the UE 202. The AMF 244 may be responsible for registration management (for example, for registering UE 202), connection management, reachability management, mobility management, lawful interception of AMF-related events, and access authentication and authorization. The AMF 244 may provide transport for SM messages between the UE 202 and the SMF 246, and act as a transparent proxy for routing SM messages. AMF 244 may also provide transport for SMS messages between UE 202 and an SMSF. AMF 244 may interact with the AUSF 242 and the UE 202 to perform various security anchor and context management functions. Furthermore, AMF 244 may be a termination point of a RAN CP interface, which may include or be an N2 reference point between the RAN 204 and the AMF 244; and the AMF 244 may be a termination point of NAS (N1) signaling, and perform NAS ciphering and integrity protection. AMF 244 may also support NAS signaling with the UE 202 over an N3 IWF interface.

[0076] The SMF 246 may be responsible for SM (for example, session establishment, tunnel management between UPF 248 and AN 208); UE IP address allocation and management (including optional authorization); selection and control of UP function; configuring traffic steering at UPF 248 to route traffic to proper destination; termination of interfaces toward policy control functions; controlling part of policy enforcement, charging, and QoS; lawful intercept (for SM events and interface to LI system); termination of SM parts of NAS messages; downlink data notification; initiating AN specific SM information, sent via AMF 244 over N2 to AN 208; and determining SSC mode of a session. SM may refer to the management of a PDU session, and a PDU session or "session" may refer to a PDU connectivity service that provides or enables the exchange of PDUs between the UE 202 and the data network 236.

[0077] The UPF 248 may act as an anchor point for intra-RAT and inter-RAT mobility, an external PDU session point of interconnecting to data network 236, and a branching point to support multi-homed PDU sessions. The UPF 248 may also perform packet routing and forwarding, perform packet inspection, enforce the user plane part of policy rules, lawfully intercept packets (UP collection), perform traffic usage reporting, perform QoS handling for a user plane (e.g., packet filtering, gating, UL/DL rate enforcement), perform uplink traffic verification (e.g., SDF-to-QoS flow mapping), transport level packet

marking in the uplink and downlink, and perform downlink packet buffering and downlink data notification triggering. UPF 248 may include an uplink classifier to support routing traffic flows to a data network.

[0078] The NSSF 250 may select a set of network slice instances serving the UE 202. The NSSF 250 may also determine allowed NSSAI and the mapping to the subscribed S-NSSAIs if needed. The NSSF 250 may also determine the AMF set to be used to serve the UE 202, or a list of candidate AMFs based on a suitable configuration and possibly by querying the NRF 254. The selection of a set of network slice instances for the UE 202 may be triggered by the AMF 244 with which the UE 202 is registered by interacting with the NSSF 250, which may lead to a change of AMF. The NSSF 250 may interact with the AMF 244 via an N22 reference point; and may communicate with another NSSF in a visited network via an N31 reference point (not shown). Additionally, the NSSF 250 may exhibit an Nnssf service-based interface.

[0079] The NEF 252 may securely expose services and capabilities provided by 3GPP network functions for the third party, internal exposure/re-exposure, AFs (e.g., AF 260), edge computing or fog computing systems, etc. In such embodiments, the NEF 252 may authenticate, authorize, or throttle the AFs. NEF 252 may also translate information exchanged with the AF 260 and information exchanged with internal network functions. For example, the NEF 252 may translate between an AF-Service-Identifier and an internal 5GC information. NEF 252 may also receive information from other NFs based on the exposed capabilities of other NFs. This information may be stored at the NEF 252 as structured data, or a data storage NF using standardized interfaces. The stored information can then be re-exposed by the NEF 252 to other NFs and AFs, or used for other purposes such as analytics. Additionally, the NEF 252 may exhibit a Nnef service-based interface.

[0080] The NRF 254 may support service discovery functions, receive NF discovery requests from NF instances, and provide the information of the discovered NF instances to the NF instances. NRF 254 also maintains information on available NF instances and their supported services. As used herein, the terms "instantiate," "instantiation," and the like may refer to the creation of an instance, and an "instance" may refer to a concrete occurrence of

an object, which may occur, for example, during the execution of program code. Additionally, the NRF 254 may exhibit the Nnrf service-based interface.

[0081] The PCF 256 may provide policy rules to control plane functions to enforce them, and may also support a unified policy framework to govern network behavior. The PCF 256 may also implement a front end to access subscription information relevant for policy decisions in a UDR of the UDM 258. In addition to communicating with functions over reference points as shown, the PCF 256 exhibits an Npcf service-based interface.

[0082] The UDM 258 may handle subscription-related information to support the network entities' handling of communication sessions and may store the subscription data of UE 202. For example, subscription data may be communicated via an N8 reference point between the UDM 258 and the AMF 244. The UDM 258 may include two parts, an application front end, and a UDR. The UDR may store subscription data and policy data for the UDM 258 and the PCF 256, and/or structured data for exposure and application data (including PFDs for application detection, application request information for multiple UEs 202) for the NEF 252. The Nudr service-based interface may be exhibited by the UDR 221 to allow the UDM 258, PCF 256, and NEF 252 to access a particular set of the stored data, as well as to read, update (e.g., add, modify), delete, and subscribe to the notification of relevant data changes in the UDR. The UDM may include a UDM-FE, which is in charge of processing credentials, location management, subscription management, and so on. Several different front ends may serve the same user in different transactions. The UDM-FE accesses subscription information stored in the UDR and performs authentication credential processing, user identification handling, access authorization, registration/mobility management, and subscription management. In addition to communicating with other NFs over reference points as shown, the UDM 258 may exhibit the Nudm service-based interface.

[0083] The AF 260 may provide application influence on traffic routing, provide access to NEF, and interact with the policy framework for policy control.

[0084] In some embodiments, the 5GC 240 may enable edge computing by selecting operator/3rd party services to be geographically close to a point that

the UE 202 is attached to the network. This may reduce latency and load on the network. To provide edge-computing implementations, the 5GC 240 may select a UPF 248 close to the UE 202 and execute traffic steering from the UPF 248 to data network 236 via the N6 interface. This may be based on the UE subscription data, UE location, and information provided by the AF 260. In this way, the AF 260 may influence UPF (re)selection and traffic routing. Based on operator deployment, when AF 260 is considered to be a trusted entity, the network operator may permit AF 260 to interact directly with relevant NFs. Additionally, the AF 260 may exhibit a Naf service-based interface.

[0085] The data network 236 may represent various network operator services, Internet access, or third-party services that may be provided by one or more servers including, for example, application/content server 238.

[0086] FIG. 3 schematically illustrates a wireless network 300 in accordance with various embodiments. The wireless network 300 may include a UE 302 in wireless communication with AN 304. The UE 302 and AN 304 may be similar to, and substantially interchangeable with, like-named components described elsewhere herein.

[0087] The UE 302 may be communicatively coupled with the AN 304 via connection 306. The connection 306 is illustrated as an air interface to enable communicative coupling and can be consistent with cellular communications protocols such as an LTE protocol or a 5G NR protocol operating at mmWave or sub-6 GHz frequencies.

[0088] The UE 302 may include a host platform 308 coupled with a modem platform 310. The host platform 308 may include application processing circuitry 312, which may be coupled with protocol processing circuitry 314 of the modem platform 310. The application processing circuitry 312 may run various applications for the UE 302 that source/sink application data. The application processing circuitry 312 may further implement one or more layer operations to transmit/receive application data to/from a data network. These layer operations may include transport (for example UDP) and Internet (for example, IP) operations

[0089] The protocol processing circuitry 314 may implement one or more layer operations to facilitate transmission or reception of data over the

connection 306. The layer operations implemented by the protocol processing circuitry 314 may include, for example, MAC, RLC, PDCP, RRC, and NAS operations.

[0090] The modem platform 310 may further include digital baseband circuitry 316 that may implement one or more layer operations that are "below" layer operations performed by the protocol processing circuitry 314 in a network protocol stack. These operations may include, for example, PHY operations including one or more of HARQ-ACK functions, scrambling/descrambling, encoding/decoding, layer mapping/de-mapping, modulation symbol mapping, received symbol/bit metric determination, multi-antenna port precoding/decoding, which may include one or more of space-time, space-frequency or spatial coding, reference signal generation/detection, preamble sequence generation and/or decoding, synchronization sequence generation/detection, control channel signal blind decoding, and other related functions.

[0091] The modem platform 310 may further include transmit circuitry 318, receive circuitry 320, RF circuitry 322, and RF front end (RFFE) 324, which may include or connect to one or more antenna panels 326. Briefly, the transmit circuitry 318 may include a digital-to-analog converter, mixer, intermediate frequency (IF) components, etc.; the receive circuitry 320 may include an analog-to-digital converter, mixer, IF components, etc.; the RF circuitry 322 may include a low-noise amplifier, a power amplifier, power tracking components, etc.; RFFE 324 may include filters (for example, surface/bulk acoustic wave filters), switches, antenna tuners, beamforming components (for example, phase-array antenna components), etc. The selection and arrangement of the components of the transmit circuitry 318, receive circuitry 320, RF circuitry 322, RFFE 324, and antenna panels 326 (referred generically as "transmit/receive components") may be specific to details of a specific implementation such as, for example, whether the communication is TDM or FDM, in mmWave or sub-6 GHz frequencies, etc. In some embodiments, the transmit/receive components may be arranged in multiple parallel transmit/receive chains, may be disposed of in the same or different chips/modules, etc.

[0092] In some embodiments, the protocol processing circuitry 314 may include one or more instances of control circuitry (not shown) to provide control functions for the transmit/receive components.

[0093] A UE reception may be established by and via the antenna panels 326, RFFE 324, RF circuitry 322, receive circuitry 320, digital baseband circuitry 316, and protocol processing circuitry 314. In some embodiments, the antenna panels 326 may receive a transmission from the AN 304 by receive-beamforming signals received by a plurality of antennas/antenna elements of the one or more antenna panels 326.

[0094] A UE transmission may be established by and via the protocol processing circuitry 314, digital baseband circuitry 316, transmit circuitry 318, RF circuitry 322, RFFE 324, and antenna panels 326. In some embodiments, the transmit components of the UE 304 may apply a spatial filter to the data to be transmitted to form a transmit beam emitted by the antenna elements of the antenna panels 326.

[0095] Similar to the UE 302, the AN 304 may include a host platform 328 coupled with a modem platform 330. The host platform 328 may include application processing circuitry 332 coupled with protocol processing circuitry 334 of the modem platform 330. The modem platform may further include digital baseband circuitry 336, transmit circuitry 338, receive circuitry 340, RF circuitry 342, RFFE circuitry 344, and antenna panels 346. The components of the AN 304 may be similar to and substantially interchangeable with like-named components of the UE 302. In addition to performing data transmission/reception as described above, the components of the AN 308 may perform various logical functions that include, for example, RNC functions such as radio bearer management, uplink and downlink dynamic radio resource management, and data packet scheduling.

[0096] FIG. 4 is a block diagram illustrating components, according to some example embodiments, able to read instructions from a machine-readable or computer-readable medium (e.g., a non-transitory machine-readable storage medium) and perform any one or more of the methodologies discussed herein. Specifically, FIG. 4 shows a diagrammatic representation of hardware resources 400 including one or more processors (or processor cores) 410, one or more

memory/storage devices 420, and one or more communication resources 430, each of which may be communicatively coupled via a bus 440 or other interface circuitry. For embodiments where node virtualization (e.g., NFV) is utilized, a hypervisor 402 may be executed to provide an execution environment for one or more network slices/sub-slices to utilize the hardware resources 400.

[0097] The processors 410 may include, for example, a processor 412 and a processor 414. The processors 410 may be, for example, a central processing unit (CPU), a reduced instruction set computing (RISC) processor, a complex instruction set computing (CISC) processor, a graphics processing unit (GPU), a DSP such as a baseband processor, an ASIC, an FPGA, a radio-frequency integrated circuit (RFIC), another processor (including those discussed herein), or any suitable combination thereof.

[0098] The memory/storage devices 420 may include a main memory, disk storage, or any suitable combination thereof. The memory/storage devices 420 may include but are not limited to, any type of volatile, non-volatile, or semi-volatile memory such as dynamic random access memory (DRAM), static random access memory (SRAM), erasable programmable read-only memory (EPROM), electrically erasable programmable read-only memory (EEPROM), Flash memory, solid-state storage, etc.

[0099] The communication resources 430 may include interconnection or network interface controllers, components, or other suitable devices to communicate with one or more peripheral devices 404 or one or more databases 406 or other network elements via a network 408. For example, the communication resources 430 may include wired communication components (e.g., for coupling via USB, Ethernet, etc.), cellular communication components, NFC components, Bluetooth® (or Bluetooth® Low Energy) components, Wi-Fi® components, and other communication components.

[00100] Instructions 450 may comprise software, a program, an application, an applet, an app, or other executable code for causing at least any of the processors 410 to perform any one or more of the methodologies discussed herein. The instructions 450 may reside, completely or partially, within at least one of the processors 410 (e.g., within the processor's cache memory), the memory/storage devices 420, or any suitable combination thereof.

Furthermore, any portion of the instructions 450 may be transferred to the hardware resources 400 from any combination of the peripheral devices 404 or the databases 406. Accordingly, the memory of processors 410, the memory/storage devices 420, the peripheral devices 404, and the databases 406 are examples of computer-readable and machine-readable media.

[00101] For one or more embodiments, at least one of the components outlined in one or more of the preceding figures may be configured to perform one or more operations, techniques, processes, and/or methods as outlined in the example section below. For example, the baseband circuitry as described above in connection with one or more of the preceding figures may be configured to operate in accordance with one or more of the examples set forth below. For another example, circuitry associated with a UE, base station, network element, etc. as described above in connection with one or more of the preceding figures may be configured to operate in accordance with one or more of the examples set forth below in the example section.

[00102] The term "application" may refer to a complete and deployable package, environment to achieve a certain function in an operational environment. The term "AI/ML application" or the like may be an application that contains some artificial intelligence (AI)/machine learning (ML) models and application-level descriptions. In some embodiments, an AI/ML application may be used for configuring or implementing one or more of the disclosed aspects.

[00103] The term "machine learning" or "ML" refers to the use of computer systems implementing algorithms and/or statistical models to perform a specific task(s) without using explicit instructions but instead relying on patterns and inferences. ML algorithms build or estimate mathematical model(s) (referred to as "ML models" or the like) based on sample data (referred to as "training data," "model training information," or the like) to make predictions or decisions without being explicitly programmed to perform such tasks. Generally, an ML algorithm is a computer program that learns from experience with respect to some task and some performance measure, and an ML model may be any object or data structure created after an ML algorithm is trained with one or more training datasets. After training, an ML model may be used to make

predictions on new datasets. Although the term "ML algorithm" refers to different concepts than the term "ML model," these terms as discussed herein may be used interchangeably for the present disclosure.

[00104] The term "machine learning model," "ML model," or the like may also refer to ML methods and concepts used by an ML-assisted solution. An "ML-assisted solution" is a solution that addresses a specific use case using ML algorithms during operation. ML models include supervised learning (e.g., linear regression, k-nearest neighbor (KNN), decision tree algorithms, support machine vectors, Bayesian algorithm, ensemble algorithms, etc.) unsupervised learning (e.g., K-means clustering, principle component analysis (PCA), etc.), reinforcement learning (e.g., Q-learning, multi-armed bandit learning, deep RL, etc.), neural networks, and the like. Depending on the implementation a specific ML model could have many sub-models as components and the ML model may train all sub-models together. Separately trained ML models can also be chained together in an ML pipeline during inference. An "ML pipeline" is a set of functionalities, functions, or functional entities specific for an ML-assisted solution; an ML pipeline may include one or several data sources in a data pipeline, a model training pipeline, a model evaluation pipeline, and an actor. The "actor" is an entity that hosts an ML-assisted solution using the output of the ML model inference). The term "ML training host" refers to an entity, such as a network function, that hosts the training of the model. The term "ML inference host" refers to an entity, such as a network function, that hosts the model during inference mode (which includes both the model execution as well as any online learning if applicable). The ML-host informs the actor about the output of the ML algorithm, and the actor decides for an action (an "action" is performed by an actor as a result of the output of an ML-assisted solution). The term "model inference information" refers to information used as an input to the ML model for determining inference(s); the data used to train an ML model and the data used to determine inferences may overlap, however, "training data" and "inference data" refer to different concepts.

[00105] Mobile communications have evolved significantly from early voice systems to today's highly sophisticated integrated communication platforms. The next generation wireless communication system, 5G, or new radio (NR) will provide access to information and sharing of data anywhere,

anytime by various users and applications. NR is expected to be a unified network/system that targets to meet vastly different and sometimes conflicting performance dimensions and services. Such diverse multi-dimensional requirements are driven by different services and applications. In general, NR evolves based on 3GPP LTE-Advanced with additional potential new Radio Access Technologies (RATs) to enrich people's lives with better, simple, and seamless wireless connectivity solutions. NR may enable wireless communications and deliver fast, rich content and services.

[00106] To further improve the capabilities of NR, the disclosed techniques may be used for enabling NR in the communication band between 52.6 GHz and 71 GHz, including implementing changes to NR using downlink (DL)/uplink (UL) NR waveforms to support operation between 52.6 GHz and 71 GHz. Other considerations when using the disclosed techniques include a study of applicable numerology including subcarrier spacing, channel bandwidth (BW) (including maximum BW), and their impact on frequency range 2 (FR2) physical (PHY) layer design to support system functionality considering practical radio frequency (RF) impairments and identifying potential criticalities to physical signal/channels if any. Additional considerations when using the disclosed techniques include a study of channel access mechanism, considering potential interference to/from other nodes, assuming beam-based operation to comply with the regulatory requirements applicable to unlicensed spectrum for frequencies between 52.6 GHz and 71 GHz. In some aspects, if a potential interference impact is identified, the disclosed techniques may further include interference mitigation solutions as part of the channel access mechanism.

[00107] In some embodiments, the disclosed techniques are used to allow NR to operate also in the unlicensed bands, which are worldwide available in the band of 52.6 GHz - 71 GHz. For example, for the regions belonging to ITU Region 1, additional guidance for conformance tests and compliance with the regulatory requirements are available within the ETSI BRAN EN 302 567 (2017) specification, which is part of the harmonized standards created under standardization requests from the European Commission. Within this document, listen before talk (LBT) may always be used under all circumstances.

[00108] Given that in the 52.6 GHz - 71 GHz frequency range the propagation limitations may be severe, beamforming and directional transmissions may be used. The use of narrow beams enhances spatial reuse and allows to mitigate interference. However, in this scenario, if LBT, which is mandated by the ETSI BRAN, is performed in an omnidirectional manner as operated for the sub-6 GHz band, this may act in an overprotective manner and it may greatly depreciate spatial reuse and spectral efficiency. In fact, by using what is referred to as "omnidirectional LBT", it is likely a transmission may be prevented from a direction that may not create harmful interference for the intended receiver. This issue may be mitigated by the disclosed techniques if instead the LBT is performed in a more directional manner, which is referred to herein as "directional LBT".

[00109] FIG. 5 is an illustration of the over-protectivity of omnidirectional LBT versus directional LBT, according to some embodiments. More specifically, FIG. 5 illustrates a deployment scenario 500 composed of two base stations (gNB1 and gNB2) that perform directional transmissions. Base station gNB1 is transmitting to UE1, while gNB2 is attempting to access the channel to perform a directional transmission toward UE2. FIG. 5 also depicts the consequences of either performing omnidirectional or directional LBT. For the omnidirectional LBT illustration, gNB2 senses the channel to be busy and is not allowed to transmit, even though a current transmission between gNB1 and UE1 would not have caused any interference at UE2. For the directional LBT illustration, gNB2 senses the channel to be idle and can transmit.

[00110] FIG. 6 is an illustration of some scenarios highlighting the drawback of directional LBT.

[00111] While directional LBT certainly mitigates the overprotective behavior of the omnidirectional LBT and allows to boost spectral efficiency and gain from spatial reuse, it may on the other hand lead to situations in which ongoing nearby transmissions are not detected at the transmitter, and it may enhance the well know hidden-node problem and may arise issues deriving from directional deafness. FIG. 6 illustrates a diagram 600 of scenarios where hidden nodes and deafness arise due to the directional nature of directional LBT. In the illustrated Case 1, an example of enhanced hidden node problem is illustrated,

where while gNB2 performs directional LBT, the source of interference comes from the opposite direction from where the transmission would be performed. In t he illustrated Case 2, an example of deafness is illustrated. In this case, both UE1 and UE2 are equipped with a quasi or omni directional antenna at the receiver. While gNB2 performs directional LBT, it is unaware of the ongoing transmission between gNB1 and UE1, and by performing transmission to UE2 it will interfere with UE1.

[00112] Directional LBT ensures that interference mitigation is contained and channel access is utilized fairly over a specific direction, but this is not valid in all other directions where the LBT has not been performed. Together with the fact that transmission and reception may be performed directionally, several issues may be present (e.g., as illustrated in FIG. 7 and FIG. 8), which can be addressed using the disclosed techniques.

[00113] FIG. 7 is an illustration of reduced spectral utilization due to the directional nature of the transmissions and reception, combined with directional LBT, according to some embodiments. In some embodiments, the deployment 700 illustrated in FIG. 7, which includes multiple UEs located in different sectors, may be scheduled with overlapping time-domain resources and both UEs may concurrently contend the channel. The gNB1 may point only in a specific direction at a specific time and, for instance, it may direct toward the direction over which LBT has previously succeeded, which may coincide with the direction toward UE1. However, at anytime gNB1 may be unaware of which UEs may succeed the channel. In this case, if UE1 fails LBT, while UE2 succeeds and starts transmitting, the gNB1 would miss the reception, unless a procedure to account for potential LBT failures is introduced.

[00114] FIG. 8 is an illustration 800 of a possible interference increase and limitations during COT sharing, according to some embodiments.

[00115] In the case of both gNBs and UEs sharing channel occupancy time (COT), then i) the responding devices may be restricted to be positioned only in the sector where the gNB's directional LBT has succeeded, which in some cases may result in underutilization of the COT; ii) even if all the responding devices are located in the same sector if these perform directional LBT to utilize the shared COT, these may lead to high interference at the gNB,

since most of the UEs attempting to perform LBT may succeed it, since the interference may come from their back and not in the direction of the gNB. This issue is illustrated in FIG. 8.

[00116] In some embodiments, the disclosed techniques include enabling directional LBT on top of the framework as well as mitigating hidden node and deafness issues when directional LBT is used. Furthermore, the present disclosure provides details regarding some techniques and procedural options on how to perform beam pairing and how to allow COT sharing in presence of directional LBT. Additionally, the disclosed techniques provide details on how to enable directional LBT for systems operating in the ITU region 1 within the unlicensed band between 52.6 GHz and 71 GHz. Furthermore, the present disclosure provides several procedural options on how to mitigate deafness and hidden node issues.

[00117] Indication of Directional LBT

[00118] As mentioned above, for systems operating in the ITU region 1 within the unlicensed band between 52.6 GHz and 71 GHz, the LBT procedure is mandatory. However, whether omnidirectional or directional LBT must be performed is not mandated. Given that both have their advantages and drawback, omnidirectional or directional LBT may be used based on a specific use case and/or deployment.

[00119] In this matter, in an example embodiment, whether a device may perform omnidirectional or directional LBT is based on a newly introduced higher layer signaling. For instance, a UE and/or a gNB may be configured to perform omnidirectional or directional LBT procedure through higher layer signaling via NR remaining minimum system information (RMSI) or system information block1 (SIB1), NR other system information (OSI), or dedicated radio resource control (RRC) signaling.

[00120] In an example embodiment, to indicate what type of procedure the UE may follow based on whether the gNB has performed omnidirectional or directional LBT to acquire the channel is indicated dynamically, e.g., via explicit indication in the downlink control information (DCI) 1_0 or 1_1 or 1_2.

[00121] In an example embodiment, whether a UE may be configured to perform omnidirectional or directional LBT is indicated dynamically via explicit indication in the downlink control information (DCI) 0_0 or 0_1 or 0_2.

[00122] In an example embodiment, before radio resource control (RRC) connection setup, e.g., during initial access via 4-step RACH or 2-step RACH procedure, UE may perform omnidirectional LBT. After the RRC connection setup, UE may report its capability on the support of directional LBT to the gNB. After exchanging UE capability, gNB may configure the support of directional LBT to the UE.

[00123] As a further extension, for transmission of synchronization signal block (SSB), common control message including system information block (SIB), paging and random access response (RAR), and group common DCI, only omnidirectional LBT may be employed.

[00124] Further, for fallback DCI format including DCI format 1_0 and 0_0, only omnidirectional LBT may be employed. In this case, for the physical uplink shared channel (PUSCH) which is scheduled by DCI format 0_0, only omnidirectional LBT may be used.

[00125] General Procedure for Directional LBT

[00126] Before a device can perform a transmission over a narrow direction/sector or antenna beam, which is referred herein as a "transmission beam", the device may perform the LBT procedure and the related energy detection on a specific direction/sector or antenna beam (referred to herein as "LBT beam"). The LBT beam includes a width referred to as "LBT beam-width".

[00127] In some embodiments, the LBT beam and beam-width may be the same as the transmission beam and beam-width, or they may be different. For the latter case, the LBT beam-width may be fixed or may be configured among a set of values through higher layer signaling. For instance, a UE may be configured to perform directional LBT using a specific beam-width through higher layer signaling via NR remaining minimum system information (RMSI), system information block1 (SIB1), NR other system information (OSI), or dedicated radio resource control (RRC) signaling. The value of the LBT beam-

width that is configured to be used by the UE may be the same as that used by the gNB or may be different.

[00128] In another option, the UE is indicated dynamically the specific beam-width that should be used to perform directional LBT within DCI 0_0 and/or 0_1. In some aspects, the indication of the beam-width field may be used as an implicit indication that the UE is configured to perform directional LBT. In another aspect, the indication of the beam-width field may be composed of X bits, which refer to a predefined table with specific values or to a set of values that are RRC configured.

[00129] FIG. 9 illustrates a gNB 900 that uses the opposite beam as that used for transmission to perform LBT, according to some embodiments.

[00130] In some embodiments, the LBT beam used is the same as the transmission beam. As a different option, the LBT beam is the opposite beam as that used for transmission, which is used to detect any interferences, which usually happen to come from the opposite direction from which the transmission is performed, as previously illustrated in FIG. 6 (Case 1). This procedure is illustrated in FIG. 9 where the initiating device is a gNB. In this example, the LBT beamwidth and the transmission beam width are also different.

[00131] FIG. 10 illustrates a gNB 1000 that uses both the transmission beam and the opposite beam as that used for transmission to perform LBT, according to some embodiments.

[00132] In some embodiments, the gNB may perform LBT by using both the transmission beam as well as the beam in the opposite direction as that used for transmission. In this case, the energy detection (ED) threshold used in both LBT beams is the same or may be different. In one embodiment, the ED threshold used in the beam pointing in the opposite direction over which the transmission is targeted may be lower to ensure a higher level of protection from the direction which is likely to cause more harm. This procedure is illustrated in FIG. 10 where the initiating device is a gNB.

[00133] In one embodiment, when an initiating device is configured to perform directional LBT, that device may receive data, in case of COT sharing, in an omnidirectional manner or with a beam-width that may be larger than the

LBT-beam-width, and which may be either fixed, configured, or signaled through downlink control information (DCI).

[00134] In one embodiment, a gNB may perform directional LBT over multiple directions at the same time. In this case, the embodiments listed above may be extended straightforwardly.

[00135] In one embodiment, the UE may not be allowed to perform directional LBT, and directional LBT is only supported at the gNB.

[00136] The embodiments disclosed herein are not mutually exclusive and may be combined.

[00137] Receiver assisted LBT– General Procedure

[00138] In some embodiments, directional LBT is used while spatial reuse is enabled, allowing mitigation of the over-protection associated with the omnidirectional LBT. However, the directional LBT processing may lead to additional hidden node problems as well as deafness. To mitigate these additional issues deriving from the use of directional LBT, some additional countermeasures may be used as provided by the disclosed technique. In some embodiments, a handshake-like scheme may be used on top of the directional LBT.

[00139] FIG. 11 is a high-level illustration of a two-stage handshake procedure 1100 during a mobile COT (MCOT), according to some embodiments.

[00140] In one embodiment, a set of downlink (DL) and uplink (UL) transmissions between an initiating device and one or more responding devices, is composed of two stages: a hand-shake stage and a data-transmission stage. In case the initiating device is a gNB and the responding device is a single UE, the transmission procedure can be illustrated as in FIG. 11.

[00141] In one embodiment, upon reception of the DL header, a UE may perform an omnidirectional CCA, which may serve to assess the interference level at the receiver preventing mutual blocking from different active UEs within the area served by the DL beam, and mitigate deafness issues as those illustrated in FIG. 6 (case 2), or may be allowed to perform Cat-1 LBT and transmit directly. In one option, the UE may perform a single shot LBT before transmitting the UL header. The single-shot LBT may be constituted as follows:

(a) using an 8 us observation window, where a channel is assessed to be idle if within the observation window given a measurement window of X us < 8 us, the energy detected is below an energy detection (ED) threshold; and (b) using two observation windows, such as a first observation window composed by 8 us followed by another observation window of 5us. A channel is assessed to be idle if within both the observation window given a measurement window of X us < 8 us, the energy detected is below an ED threshold.

[00142] In one embodiment, upon reception of the UL header, a gNB may transmit directly DL control information. The DL control information may schedule a data transmission up to the end of the COT that is counted from the moment when the DL header is transmitted or may be in receiving mode, to allow either a scheduled UE or a CG UE with which it has performed a handshake to transmit.

[00143] In one embodiment, the initial DL header is based on a UE-specific DCI. In this case, a fallback and/or a non-fallback DCI may be used (e.g., DCI 0_0 or 0_1 or 0_2). The DCI used may be modified to include additional information by either adding some additional fields or by repurposing some existing bit fields. In particular, one or more of the following information may be carried: (a) an additional bit field may be added to indicate explicitly that the current transmission is part of a DL header; and (b) an additional bit field may be added to carry information related to the length of the COT, so that UEs belonging to that group may be able to retrieve information related to how long the medium may be occupied. In one option, if this information is included, this may implicitly indicate that the current transmission is part of a DL header.

[00144] In some embodiments, the UL header that follows the DL header may carry ACK/NACK information related to the DL header, and this ACK/NACK information is carried by PUCCH.

[00145] In some embodiments, the DCI carried in the DL header indicates in which instance of time the PUCCH would be transmitted, and the time domain resources used, i.e., on which slot PUCCH is transmitted. Further, the PUCCH resource indicator (PRI) and/or the starting control channel element (CCE) of the DCI can be used to indicate the PUCCH resource for carrying HARQ-ACK feedback. In another option, if the UE performs LBT before

transmitting the UL header, the information carried in the DCI within the DL header indicating the time domain resources and the start of the PUCCH transmission is reinterpreted as the starting position of a window within which the UL header is expected. In some aspects, the length of the window can coincide with the indicated length of the PUCCH, or it can be always fixed or separately indicated by RRC. Within the window, the UE could attempt a CCA check multiple times, and once the channel is assessed to be idle it can perform the transmission of the UL header. In some aspects, the frequency domain and code domain resource are the same as the ones which are indicated by PRI and/or starting CCE within the DCI.

[00146] FIG. 12 is a high-level illustration of a two-stage handshake procedure 1200 with a transmission window for UL header transmission, according to some embodiments.

[00147] In one embodiment, the initial DL header is based on a UE-specific DCI. In this case, a fallback and/or a non-fallback DCI may be used (e.g., DCI 0_0 or 0_1 or 0_2), and the DCI may be modified to include additional information by either adding some additional fields or by repurposing some existing bit fields. In particular, one or more of the following information may be carried: (a) an additional bit field may be added to indicate explicitly that the current transmission is part of a DL header; and (b) an additional bit field may be added to carry information related to the length of the COT, so that UEs belonging to that group may be able to retrieve information related to how long the medium may be occupied. In one option, if this information is included, this may implicitly indicate that the current transmission is part of a DL header.

[00148] In some embodiments, the UL header that follows the DL header may be constituted by a PUSCH or SRS transmission. In one option, the indication of the start and length of the PUSCH or SRS transmission follow the legacy behavior. In another option, if the UE performs LBT before transmitting the UL header, the indication of the starting position of the PUSCH or SRS transmission is reinterpreted as the start of a window within which the UL header is expected. The length of the window can be fixed or RRC configured. Within the window, the UE could attempt the CCA check multiple times, and

once the channel is assessed to be idle it can perform the transmission of the UL header.

[00149] In one embodiment, the gNB employs a two-stage DCI approach to transmit the DL header and subsequentially to the reception of a UL header proceed to schedule DL or UL transmission. In one embodiment, a first DCI is transmitted within the DL header which serves the purpose of triggering the UL header. Once the UL header is received by the gNB, a second DCI is transmitted which serves the purpose to schedule a DL or UL transmission within the remaining of the acquired COT. FIG. 13 is a high-level illustration 1300 of a two-stage DCI approach used within a two-stage handshake procedure, according to some embodiments.

[00150] In one embodiment, to implement a two-stage DCI, a DL and/or UL fallback and/or a non-fallback DCI may be used, and the DCI may be modified.

[00151] In one option, the DCI includes additional information by either adding additional fields or by repurposing some existing bit fields. In particular, one or more of the following information may be carried: (a) an additional bit field may be added to indicate whether the DCI is to trigger a UL header or to schedule an actual transmission; and (b) an additional bit field may be added to carry information related to the length of the COT, so that UEs belonging to that group may be able to retrieve information related to how long the medium may be occupied. In one option, if this information is included, this may implicitly indicate that the current DCI is to trigger a UL header.

[00152] In one embodiment, a UL DCI (e.g., DCI 0_X) may be used for the 1st stage, and a DL DCI (e.g., DCI 1_X) may be used for the 2nd stage.

[00153] In one option, to reduce overhead, and transmit the same information through the two DCIs in the two-stage DCI procedure, for the DCI triggering a UL header (1st stage DCI) only a few information are carried, and the remaining information is carried by the scheduling DCI (2nd stage DCI). For instance, the 1st stage DCI may include the resource allocated for the transmission of the 2nd stage DCI. Further, the 1st stage DCI may include one or more of the following information, which may or may not be carried in the 2nd stage DCI: frequency domain and/or time-domain resource assignment for

UL header, bit field indicating whether the DCI is to trigger the UL header or not, bit field indicating the length of the COT, MCS information, redundancy version, HARQ process number, TPC information, carrier indicator, SRS resource indication, precoding information, antenna port, DMRS sequence indicator, bit field indicating information related to the cyclic prefix extension to apply to the UL header if the UE performs LBT before transmitting the UL header, and bit field indicating the CAPC used by the gNB during the directional LBT, which may be an implicit indicator of the COT length.

[00154] In some aspects, the UL header that follows the DL header may carry ACK/NACK information related to the DL header, and this ACK/NACK information may be carried by PUCCH. As an alternative, the UL header that follows the DL header may be constituted by a PUSCH or SRS transmission. In one option, the indication of the start and length of the PUCCH or PUSCH or SRS transmission that constitutes the UL header follows the legacy behavior. In another option, if the UE performs LBT before transmitting the UL header, and the indication of the starting position of the PUCCH or PUSCH or SRS transmission which are used as UL header are reinterpreted as the start of a window within which the UL header is expected. The length of the window can be fixed or RRC configured. Within the window, the UE could attempt the CCA check multiple times, and once the channel is assessed to be idle it can perform the transmission of the UL header.

[00155] In one embodiment, the initial DL header is based on a cell group (CG)-PDCCH. The assumption is that all the UEs belonging to a group would be located in an area covered by a single beam/sector. By utilizing a CG-PDCCH, this may be useful in case a UE may need to perform LBT before transmitting the UL header, and this would allow multiple UEs to contend simultaneously the channel and increase spectral utilization in the event a specific UE may fail the LBT: in this case, if UE specific DCI is used and a UE fails LBT, then the gNB may wait until the next opportunity to perform directional LBT again. Another advantage of using GC-PDCCH may be in terms of overhead saving in case multiple UE's may need to be multiplexed, and the gNB's COT sharing may be shared with multiple UEs.

[00156] In some embodiments, a fallback and/or a non-fallback DCI may be used, and the DCI may be modified to include additional information by either adding some additional fields or by repurposing some existing bit fields, and the CRC may be scrambled with a new RNTI or an existing group-common RNTI. In particular, one or more of the following information may be carried: (a) an additional bit field may be added to indicate explicitly that the current transmission is part of a DL header. (b) An additional bit field may be added to carry information related to the length of the COT, so that UEs belonging to that group may be able to retrieve information related to how long the medium may be occupied. In one option, if this information is included, this may implicitly indicate that the current transmission is part of a DL header. (c) Bitfield indicating the frequency and time domain used for the group of UE to attempt LBT and transmit the UL header. Different UEs may be provided with the same or different information: for instance, the TDRA and/or the FDRA may be non-overlapping for the UL header and may be provided separately for each UE.

[00157] In one option, if the UE performs LBT before transmitting the UL header, the indication of the starting position of UL header refers to a window within which UE could attempt the CCA check multiple times, and once the channel is assessed to be idle it can perform the transmission of the UL header. The length of the window can be fixed or RRC configured.

[00158] From the gNB perspective, the gNB may monitor the window or transmission instance where a UE is expected to transmit the UL header, and similarly, as legacy NR-U it may check for DRMS presence to assess whether LBT has succeeded or not for a specific UE. In this case, the directional LBT can be considered successful, and the gNB can proceed within the transmission stage to schedule PDSCH or PUSCH for that UE.

[00159] In one embodiment, the DL header may be followed by a gap before the UL header to account for proper UE processing and decoding. The same processing may also apply between the UL header and the data transmission: in this case, a gap may be used for UL header decoding and subsequent scheduling decision for UL/DL data transmission.

[00160] In one embodiment, in case a configured grant (CG) UE may have time domain resource allocation (TDRA) overlapping with the gNB's COT

acquired by the gNB through directional LBT, the UE upon reception of the DL header may perform a PUSCH transmission containing CG-UCI where either an additional bit indication is added or some invalid configuration may be provided. In this last case, one option may be within the CG-UCI to indicate UE's COT sharing for either control or control and data transmission. Since the gNB in this last case is aware of the fact that the UE is not operating in its COT, it may interpret this as an acknowledgment of the initial DL header and may proceed as specified above.

[00161] FIG. 14A and FIG. 14B are high-level illustrations of two-stage handshake procedures 1400A and 1400B when multiple UEs are multiplexed, according to some embodiments.

[00162] In one embodiment, in case the responding devices may be multiple UEs, these may be multiplexed either through SU-MIMO or by using MU-MIMO, and the procedure to follow may be the one illustrated in FIG. 14A and FIG. 14B. More specifically, in FIGS. 14A-14B, two UEs are multiplexed through the transmission of UE-specific DCIs.

[00163] In one embodiment, a gNB may perform directional LBT at the same time over multiple beams. In this case, the downlink transmission from a gNB to a UE is performed after a hand-shake stage which comprises beam scanning and beam training that is envisioned for high-band operation. The downlink and uplink transmissions occurring between the gNB and a UE follow a successful beam-training phase in the hand-shake stage.

[00164] In some embodiments, during the handshake phase, a gNB may transmit a UE specific DCI or group-common (GC)-PDCCH as indicated in previous embodiments at each beam, which would serve to indicate to the UE that the directional LBT has succeeded at the gNB over that specific direction.

[00165] FIG. 15 is a high-level illustration of a two-stage handshake procedure 1500 when during the hand-shake stage beam scanning and pairing may be performed, according to some embodiments.

[00166] In one embodiment, if the UE is the initiating device, the procedure may be still composed of a hand-shake procedure and a data transmission procedure. The hand-shake procedure may be composed of a UL

header, a gap to account for proper gNB processing and decoding, and a DL header.

[00167] In one embodiment, if the UE is the initiating device, for a dynamic grant based (DG) UE, the UL header may be composed by a short TTI which has been previously scheduled by a gNB within a gNB's shared COT and may contain PUCCH/PUSCH and/or SRS. For a configured grant (CG) UE, the UL header may be composed of a short PUSCH containing a CG-UCI, which indicates that COT sharing is enabled for control information only.

[00168] In some aspects, some of the disclosed embodiments may apply to the case of the UE's shared COT.

[00169] In one embodiment, if the UE is the initiating device, the handshake mechanism may mimic a 2-step RACH procedure, where a UE after performing directional LBT may transmit msg-A, and the DL header may correspond to msg-B.

[00170] Coordination Between gNBs to Speed Up the CCA Process

[00171] FIG. 16 is an illustration of coordination 1600 between gNBs to speed a CCA process, according to some embodiments.

[00172] In some embodiments, a gNB may perform clear channel assessment (CCA) over multiple spatial beams. In the case of a large number of beams, the CCA process may take a long time especially when the served UEs actively transmit and receive over different beams. To speed up the overall CCA process, some coordination between gNBs may be exploited. In particular, before doing CCA over a beam a gNB can check whether its signal transmission over the beam causes significant interference to signal reception of neighboring gNBs and/or UEs served by the neighboring gNBs. In case of the presence of high interference due to potential signal transmission, the beam can be skipped during CCA for the next beam. For example, in FIG. 16 gNB #1 is going to perform CCA over multiple beams for further signal transmission. However, transmission over beam #1 from gNB #1 would cause high interference to gNB #2 currently receiving a signal from its served UE #2. Additionally, signal transmission over beam #3 from gNB #1 would cause high interference to UE #3 currently receiving a signal from its serving gNB #3. Therefore, by using the information from gNB #2 and gNB#3 about potentially high interference

produced by beam #1 and beam #3 from gNB #1, the gNB can skip those beams and proceed with CCA to its other beams which do not create high interference to neighboring gNBs and UEs. In this regard, some beams (e.g., beam #1, beam #2, beam #3) can be skipped as they produce high interference to neighbor gNB #2 and gNB #3 and their served UEs.

[00173] In some embodiments, the information about beams creating high interference can be obtained as a result of periodical measurements of the reference signal received power (RSRP) conducted by gNBs and UEs. For this purpose, the reference signals are transmitted over different beams. A new type of reference signal can be used or some of the existing types of the reference signal can be reused to measure the RSRP of beams formed for CCA. The beam can be identified by the physical resources occupied by the corresponding reference signal. Alternatively, the beam can be identified by the sequence modulating the corresponding reference signal. For the served UEs, the RSRP measurement results of beams formed at neighboring gNBs are collected by the serving gNB. Then the RSRP measurement results collected individually by each gNBs are exchanged between neighboring gNBs to be available for each gNB. The beam of a gNB can be considered as causing significant interference to other impacted gNB or UE if the RSRP level measured by the impacted gNB or UE is higher than the predefined threshold.

[00174] COT Sharing with Directional LBT

[00175] As described above for UEs that belong to the same UE-group and the same coverage area, mutual blocking may occur during the handshake procedure if most of these UEs successfully receive the DL header and attempt to transmit the UL header at the same time within a specified time window.

[00176] In one embodiment, to mitigate the mutual blocking among UEs of the same group, upon reception of the DL header, a UE may perform omnidirectional LBT before transmitting the UL header. The instance when LBT is performed may be deferred by N CCA slots, which are 5us long, where N is randomly and uniformly drawn at the UE from 0 to X, where is X may be for example 6, which corresponds to a maximum deferral of one slot at 480 sub-carrier spacing (SCS).

[00177] Overlapping TDRA with Directional LBT

[00178] When directional transmissions are performed together with directional LBT, multiple UEs may be scheduled outside of gNB's COT with overlapping time-domain resources (TDRA). While these UEs (both GB and CG UEs) may potentially concurrently contend the channel, the gNB may only point in a specific direction at a specific time. Based on which UE may succeed LBT and transmit, this may lead to the case when the transmission is missed regardless of the LBT success because the gNB is receiving in the wrong direction (as illustrated in FIG. 7). The same issue may also occur in the case when the UE may be scheduled inside the gNB's COT if the UE following some of the embodiments of this disclosure may perform omnidirectional LBT.

[00179] In one embodiment, the aforementioned issue may be solved for either the case when a DG or CG UEs are scheduled time domain resources within or outside the gNB's COT by making sure that those UEs with overlapping TDRA are always at any given time served by the same antenna beam. If the gNB can receive on N beam directions simultaneously, UEs with overlapping TDRA at any given time do not exceed N beam directions.

[00180] In one embodiment, if the receiver assisted LBT is supported, the gNB is also equipped with an omnidirectional antenna in reception or with a quasi-omnidirectional antenna in reception, where the quasi-omni beam width is configured so that the gNB is potentially able to receive transmissions from all the GB or CG UEs with overlapping TDRA at a given time. Furthermore, for UL transmissions within the gNB's COT, a gNB may perform directional LBT over all directions over which it may schedule or there may be CG UEs that may be potentially transmitting at the same time. In this case, as mentioned in one of the embodiments above, the hand-shaking procedure may be also used for beam scanning and beam pairing.

[00181] In one embodiment, if the receiver assisted LBT is supported, the aforementioned issue may be solved for scheduled and CG UEs outside of the gNB's COT, by increasing the overhead for the UL header during the handshake procedure by transmitting the UL header information over different beams and supporting during the handshake procedure beam scanning and pairing (similarly as illustrated in FIG. 13).

[00182] In one embodiment, if the receiver-assisted LBT is not supported, the aforementioned issue may be solved for scheduled and CG UEs outside of the gNB's COT, by appending before the actual transmission an initial preamble transmission, which may serve at the gNB for beam scanning and pairing. In this case, the preamble may be composed of cyclic prefixes or data or SRS transmission.

[00183] FIG. 17 illustrates a block diagram of a communication device such as an evolved Node-B (eNB), a new generation Node-B (gNB) (or another RAN node), an access point (AP), a wireless station (STA), a mobile station (MS), or a user equipment (UE), in accordance with some aspects and to perform one or more of the techniques disclosed herein. In alternative aspects, the communication device 1700 may operate as a standalone device or may be connected (e.g., networked) to other communication devices.

[00184] Circuitry (e.g., processing circuitry) is a collection of circuits implemented in tangible entities of the device 1700 that include hardware (e.g., simple circuits, gates, logic, etc.). Circuitry membership may be flexible over time. Circuitries include members that may, alone or in combination, perform specified operations when operating. In an example, the hardware of the circuitry may be immutably designed to carry out a specific operation (e.g., hardwired). In an example, the hardware of the circuitry may include variably connected physical components (e.g., execution units, transistors, simple circuits, etc.) including a machine-readable medium physically modified (e.g., magnetically, electrically, moveable placement of invariant massed particles, etc.) to encode instructions of the specific operation.

[00185] In connecting the physical components, the underlying electrical properties of a hardware constituent are changed, for example, from an insulator to a conductor or vice versa. The instructions enable embedded hardware (e.g., the execution units or a loading mechanism) to create members of the circuitry in hardware via the variable connections to carry out portions of the specific operation when in operation. Accordingly, in an example, the machine-readable medium elements are part of the circuitry or are communicatively coupled to the other components of the circuitry when the device is operating. In an example, any of the physical components may be used in more than one member of more

than one circuitry. For example, under operation, execution units may be used in a first circuit of a first circuitry at one point in time and reused by a second circuit in the first circuitry, or by a third circuit in a second circuitry at a different time. Additional examples of these components with respect to the device 1700 follow.

[00186] In some aspects, the device 1700 may operate as a standalone device or may be connected (e.g., networked) to other devices. In a networked deployment, the communication device 1700 may operate in the capacity of a server communication device, a client communication device, or both in server-client network environments. In an example, the communication device 1700 may act as a peer communication device in a peer-to-peer (P2P) (or other distributed) network environment. The communication device 1700 may be a UE, eNB, PC, a tablet PC, an STB, a PDA, a mobile telephone, a smartphone, a web appliance, a network router, switch or bridge, or any communication device capable of executing instructions (sequential or otherwise) that specify actions to be taken by that communication device. Further, while only a single communication device is illustrated, the term "communication device" shall also be taken to include any collection of communication devices that individually or jointly execute a set (or multiple sets) of instructions to perform any one or more of the methodologies discussed herein, such as cloud computing, software as a service (SaaS), and other computer cluster configurations.

[00187] Examples, as described herein, may include, or may operate on, logic or a number of components, modules, or mechanisms. Modules are tangible entities (e.g., hardware) capable of performing specified operations and may be configured or arranged in a certain manner. In an example, circuits may be arranged (e.g., internally or with respect to external entities such as other circuits) in a specified manner as a module. In an example, the whole or part of one or more computer systems (e.g., a standalone, client, or server computer system) or one or more hardware processors may be configured by firmware or software (e.g., instructions, an application portion, or an application) as a module that operates to perform specified operations. In an example, the software may reside on a communication device-readable medium. In an example, the software, when executed by the underlying hardware of the module, causes the hardware to perform the specified operations.

[00188] Accordingly, the term "module" is understood to encompass a tangible entity, be that an entity that is physically constructed, specifically configured (e.g., hardwired), or temporarily (e.g., transitorily) configured (e.g., programmed) to operate in a specified manner or to perform part or all of any operation described herein. Considering examples in which modules are temporarily configured, each of the modules need not be instantiated at any one moment in time. For example, where the modules comprise a general-purpose hardware processor configured using the software, the general-purpose hardware processor may be configured as respective different modules at different times. The software may accordingly configure a hardware processor, for example, to constitute a particular module at one instance of time and to constitute a different module at a different instance of time.

[00189] The communication device (e.g., UE) 1700 may include a hardware processor 1702 (e.g., a central processing unit (CPU), a graphics processing unit (GPU), a hardware processor core, or any combination thereof), a main memory 1704, a static memory 1706, and a storage device 1707 (e.g., hard drive, tape drive, flash storage, or other block or storage devices), some or all of which may communicate with each other via an interlink (e.g., bus) 1708.

[00190] The communication device 1700 may further include a display device 1710, an alphanumeric input device 1712 (e.g., a keyboard), and a user interface (UI) navigation device 1714 (e.g., a mouse). In an example, the display device 1710, input device 1712, and UI navigation device 1714 may be a touchscreen display. The communication device 1700 may additionally include a signal generation device 1718 (e.g., a speaker), a network interface device 1720, and one or more sensors 1721, such as a global positioning system (GPS) sensor, compass, accelerometer, or another sensor. The communication device 1700 may include an output controller 1728, such as a serial (e.g., universal serial bus (USB), parallel, or other wired or wireless (e.g., infrared (IR), near field communication (NFC), etc.) connection to communicate or control one or more peripheral devices (e.g., a printer, card reader, etc.).

[00191] The storage device 1707 may include a communication device-readable medium 1722, on which is stored one or more sets of data structures or instructions 1724 (e.g., software) embodying or utilized by any one or more of

the techniques or functions described herein. In some aspects, registers of the processor 1702, the main memory 1704, the static memory 1706, and/or the storage device 1707 may be, or include (completely or at least partially), the device-readable medium 1722, on which is stored the one or more sets of data structures or instructions 1724, embodying or utilized by any one or more of the techniques or functions described herein. In an example, one or any combination of the hardware processor 1702, the main memory 1704, the static memory 1706, or the mass storage 1716 may constitute the device-readable medium 1722.

[00192] As used herein, the term "device-readable medium" is interchangeable with “computer-readable medium” or “machine-readable medium”. While the communication device-readable medium 1722 is illustrated as a single medium, the term "communication device-readable medium" may include a single medium or multiple media (e.g., a centralized or distributed database, and/or associated caches and servers) configured to store the one or more instructions 1724. The term "communication device-readable medium" is inclusive of the terms “machine-readable medium” or “computer-readable medium”, and may include any medium that is capable of storing, encoding, or carrying instructions (e.g., instructions 1724) for execution by the communication device 1700 and that causes the communication device 1700 to perform any one or more of the techniques of the present disclosure, or that is capable of storing, encoding or carrying data structures used by or associated with such instructions. Non-limiting communication device-readable medium examples may include solid-state memories and optical and magnetic media. Specific examples of communication device-readable media may include non-volatile memory, such as semiconductor memory devices (e.g., Electrically Programmable Read-Only Memory (EPROM), Electrically Erasable Programmable Read-Only Memory (EEPROM)) and flash memory devices; magnetic disks, such as internal hard disks and removable disks; magneto-optical disks; Random Access Memory (RAM); and CD-ROM and DVD-ROM disks. In some examples, communication device-readable media may include non-transitory communication device-readable media. In some examples, communication device-readable media may include communication device-readable media that is not a transitory propagating signal.

[00193] Instructions 1724 may further be transmitted or received over a communications network 1726 using a transmission medium via the network interface device 1720 utilizing any one of a number of transfer protocols. In an example, the network interface device 1720 may include one or more physical jacks (e.g., Ethernet, coaxial, or phone jacks) or one or more antennas to connect to the communications network 1726. In an example, the network interface device 1720 may include a plurality of antennas to wirelessly communicate using at least one of single-input-multiple-output (SIMO), MIMO, or multiple-input-single-output (MISO) techniques. In some examples, the network interface device 1720 may wirelessly communicate using Multiple User MIMO techniques.

[00194] The term "transmission medium" shall be taken to include any intangible medium that is capable of storing, encoding, or carrying instructions for execution by the communication device 1700, and includes digital or analog communications signals or another intangible medium to facilitate communication of such software. In this regard, a transmission medium in the context of this disclosure is a device-readable medium.

[00195] Example Aspects

[00196] The following are some additional example aspects associated with the disclosed techniques and FIGS. 1A-17.

[00197] Example 1 is an apparatus to be used in a user equipment (UE), the apparatus including processing circuitry, where to configure the UE for a directional listen before talk (LBT) procedure, the processing circuitry is to: decode downlink (DL) header information received from a base station, the DL header information associated with a directional LBT procedure performed by the base station; perform a clear channel assessment (CCA) procedure in response to receiving the DL header information; and encode uplink (UL) header information for transmission to the base station based on the CCA procedure; and a memory coupled to the processing circuitry and configured to store the DL header information.

[00198] In Example 2, the subject matter of Example 1 includes subject matter where the processing circuitry is to: perform a single-shot LBT procedure before the transmission of the uplink header information.

[00199] In Example 3, the subject matter of Example 2 includes subject matter where the single-shot LBT procedure includes a single observation window, and wherein a channel used for the transmission of the uplink header information is assessed as idle when energy detected during the single observation window is below an energy detection (ED) threshold.

[00200] In Example 4, the subject matter of Examples 2–3 includes a first observation window with a duration of 8 us followed by a second observation window with a duration of 5 us.

[00201] In Example 5, the subject matter of Example 4 includes subject matter where a channel used for the transmission of the uplink header information is assessed as idle when energy detected during the first observation window and the second observation window is below an energy detection (ED) threshold.

[00202] In Example 6, the subject matter of Examples 1–5 includes subject matter where the DL header information is UE-specific downlink control information (DCI), the DCI including channel occupancy time (COT).

[00203] In Example 7, the subject matter of Example 6 includes subject matter where the processing circuitry is to: determine transmission time for transmitting the UL header information based on the COT.

[00204] In Example 8, the subject matter of Examples 1–7 includes subject matter where the processing circuitry is to: decode DL control information transmitted from the base station in response to the UL header information, the DL control information including physical downlink shared channel (PDSCH) scheduling information; and decode DL data based on the PDSCH scheduling information.

[00205] In Example 9, the subject matter of Examples 1–8 includes, transceiver circuitry coupled to the processing circuitry; and one or more antennas coupled to the transceiver circuitry.

[00206] Example 10 is a computer-readable storage medium that stores instructions for execution by one or more processors of a user equipment (UE), the instructions to configure the UE for a directional listen before talk (LBT) procedure and to cause the UE to perform operations including decoding downlink (DL) header information received from a base station, the DL header information associated with a directional LBT procedure performed by the base

station; performing a clear channel assessment (CCA) procedure in response to receiving the DL header information; and encoding uplink (UL) header information for transmission to the base station based on the CCA procedure.

[00207] In Example 11, the subject matter of Example 10 includes subject matter where executing the instructions further causes the UE to perform operations including performing a single-shot LBT procedure before the transmission of the uplink header information.

[00208] In Example 12, the subject matter of Example 11 includes subject matter where the single-shot LBT procedure includes a single observation window, and wherein a channel used for the transmission of the uplink header information is assessed as idle when energy detected during the single observation window is below an energy detection (ED) threshold.

[00209] In Example 13, the subject matter of Examples 11–12 includes a first observation window with a duration of 8 us followed by a second observation window with a duration of 5 us.

[00210] In Example 14, the subject matter of Example 13 includes subject matter where a channel used for the transmission of the uplink header information is assessed as idle when energy detected during the first observation window and the second observation window is below an energy detection (ED) threshold.

[00211] In Example 15, the subject matter of Examples 10–14 includes subject matter where the DL header information is UE-specific downlink control information (DCI), which may include channel occupancy time (COT), and wherein executing the instructions further causes the UE to perform operations including determining transmission time for transmitting the UL header information based on the COT.

[00212] In Example 16, the subject matter of Examples 10–15 includes subject matter where executing the instructions further causes the UE to perform operations including decoding DL control information from the base station in response to the UL header information, the DL control information including physical downlink shared channel (PDSCH) scheduling information; and decoding DL data based on the PDSCH scheduling information.

[00213] Example 17 is an apparatus to be used in a base station, the apparatus including processing circuitry. To configure the base station for a

directional listen before talk (LBT) procedure, the processing circuitry is to: perform a directional LBT procedure to detect an available communication channel associated with a pre-defined direction; encode downlink (DL) header information for transmission to user equipment (UE) using the available communication channel, the DL header information may indicate a channel occupancy time (COT); decode uplink (UL) header information received from the UE in response to the DL header information; and a memory coupled to the processing circuitry and configured to store the UL header information.

[00214] In Example 18, the subject matter of Example 17 includes subject matter where the DL header information includes first downlink control information (DCI), the first DCI triggering a clear channel assessment (CCA) procedure at the UE, and the transmission of the UL header information.

[00215] In Example 19, the subject matter of Example 18 includes subject matter where the processing circuitry is to: encode second DCI for transmission to the UE in response to reception of UL header information, the second DCI including physical downlink shared channel (PDSCH) scheduling information or physical uplink shared channel (PUSCH) scheduling information.

[00216] In Example 20, the subject matter of Examples 18–19 includes subject matter where the DL header information includes first downlink control information (DCI) associated with the UE, the first DCI triggering the CCA procedure at the UE, and wherein the processing circuitry is to: after encoding the DL header information, encode second DL header information for transmission to a second UE, the second DL header information including second DCI associated with the second UE, the second DCI triggering a CCA procedure at the second UE.

[00217] Example 21 is an apparatus for user equipment (UE), the apparatus including processing circuitry. To configure the UE for a directional listen before talk (LBT) procedure, the processing circuitry is to: decode downlink (DL) header information received from a base station, the DL header information associated with a directional LBT procedure performed by the base station; perform an omnidirectional clear channel assessment (CCA) procedure in response to receiving the DL header information; determine an interference level at the UE based on the CCA procedure; and encode uplink (UL) header information for transmission to the base station, the UL header information

including the interference level; and a memory coupled to the processing circuitry and configured to store the interference level.

[00218] In Example 22, the subject matter of Example 21 includes subject matter where the processing circuitry is to: perform a single-shot LBT procedure before the transmission of the uplink header information.

[00219] In Example 23, the subject matter of Example 22 includes subject matter where the single-shot LBT procedure includes a single observation window, and wherein a channel used for the transmission of the uplink header information is assessed as idle when energy detected during the single observation window is below an energy detection (ED) threshold.

[00220] In Example 24, the subject matter of Examples 22–23 includes a first observation window with a duration of 8 us followed by a second observation window with a duration of 5 us.

[00221] In Example 25, the subject matter of Example 24 includes subject matter where a channel used for the transmission of the uplink header information is assessed as idle when energy detected during the first observation window and the second observation window is below an energy detection (ED) threshold.

[00222] In Example 26, the subject matter of Examples 21–25 includes subject matter where the DL header information is UE-specific downlink control information (DCI) including channel occupancy time (COT) associated with transmission of the DCI by the base station.

[00223] In Example 27, the subject matter of Example 26 includes subject matter where the processing circuitry is to: determine transmission time for transmitting the UL header information based on the COT.

[00224] In Example 28, the subject matter of Examples 21–27 includes subject matter where the processing circuitry is to: decode DL control information from the base station in response to the UL header information, the DL control information including physical downlink shared channel (PDSCH) scheduling information; and decode DL data based on the PDSCH scheduling information.

[00225] In Example 29, the subject matter of Examples 21–28 includes, transceiver circuitry coupled to the processing circuitry; and one or more antennas coupled to the transceiver circuitry.

[00226] Example 30 is a computer-readable storage medium that stores instructions for execution by one or more processors of a user equipment (UE), the instructions to configure the UE for a directional listen before talk (LBT) procedure and to cause the UE to perform operations including decoding downlink (DL) header information received from a base station, the DL header information associated with a directional LBT procedure performed by the base station; performing an omnidirectional clear channel assessment (CCA) procedure in response to receiving the DL header information; determining an interference level at the UE based on the CCA procedure; and encoding uplink (UL) header information for transmission to the base station, the UL header information including the interference level.

[00227] In Example 31, the subject matter of Example 30 includes subject matter where executing the instructions further causes the UE to perform operations including performing a single shot LBT procedure before the transmission of the uplink header information.

[00228] In Example 32, the subject matter of Example 31 includes subject matter where the single-shot LBT procedure includes a single observation window, and wherein a channel used for the transmission of the uplink header information is assessed as idle when energy detected during the single observation window is below an energy detection (ED) threshold.

[00229] In Example 33, the subject matter of Examples 31–32 includes a first observation window with a duration of 8 us followed by a second observation window with a duration of 5 us.

[00230] In Example 34, the subject matter of Example 33 includes subject matter where a channel used for the transmission of the uplink header information is assessed as idle when energy detected during the first observation window and the second observation window is below an energy detection (ED) threshold.

[00231] In Example 35, the subject matter of Examples 30–34 includes subject matter where the DL header information is UE-specific downlink control information (DCI) including channel occupancy time (COT) associated with transmission of the DCI by the base station, and wherein executing the instructions further causes the UE to perform operations including determining transmission time for transmitting the UL header information based on the COT.

[00232] In Example 36, the subject matter of Examples 30–35 includes subject matter where executing the instructions further causes the UE to perform operations including decoding DL control information from the base station in response to the UL header information, the DL control information including physical downlink shared channel (PDSCH) scheduling information; and decoding DL data based on the PDSCH scheduling information.

[00233] Example 37 is an apparatus to be used in a base station, the apparatus including processing circuitry. To configure the base station for a directional listen before talk (LBT) procedure, the processing circuitry is to: perform a directional LBT procedure to detect an available communication channel associated with a pre-defined direction; encode downlink (DL) header information for transmission to user equipment (UE) using the available communication channel, the DL header information indicating a channel occupancy time (COT) associated with the transmission of the DL header information; decode uplink (UL) header information received from the UE, the UL header information including interference level determined during an omnidirectional clear channel assessment (CCA) procedure, the omnidirectional CCA procedure based on the COT; and a memory coupled to the processing circuitry and configured to store the interference level.

[00234] In Example 38, the subject matter of Example 37 includes subject matter where the DL header information includes first downlink control information (DCI), the first DCI triggering the omnidirectional CCA procedure, and the transmission of the UL header information.

[00235] In Example 39, the subject matter of Example 38 includes subject matter where the processing circuitry is to: encode second DCI for transmission to the UE in response to the UL header information, the second DCI including physical downlink shared channel (PDSCH) scheduling information or physical uplink shared channel (PUSCH) scheduling information.

[00236] In Example 40, the subject matter of Examples 38–39 includes subject matter where the DL header information includes first downlink control information (DCI) associated with the UE, the first DCI triggering the omnidirectional CCA procedure, and wherein the processing circuitry is to: after encoding the DL header information, encode second DL header information for transmission to a second UE using the available communication channel, the

second DL header information including second DCI associated with the second UE, the second DCI triggering an omnidirectional CCA procedure by the second UE.

[00237] Example 41 is at least one machine-readable medium including instructions that, when executed by processing circuitry, cause the processing circuitry to perform operations to implement any of Examples 1–40.

[00238] Example 42 is an apparatus including means to implement any of Examples 1–40.

[00239] Example 43 is a system to implement any of Examples 1–40.

[00240] Example 44 is a method to implement any of Examples 1–40.

[00241] Although an aspect has been described with reference to specific exemplary aspects, it will be evident that various modifications and changes may be made to these aspects without departing from the broader scope of the present disclosure. Accordingly, the specification and drawings are to be regarded in an illustrative rather than a restrictive sense. This Detailed Description, therefore, is not to be taken in a limiting sense, and the scope of various aspects is defined only by the appended claims, along with the full range of equivalents to which such claims are entitled.

CLAIMS

What is claimed is:

1. An apparatus to be used in a user equipment (UE), the apparatus comprising:

processing circuitry, wherein to configure the UE for a directional listen before talk (LBT) procedure, the processing circuitry is to:

decode downlink (DL) header information received from a base station, the DL header information associated with a directional LBT procedure performed by the base station;

perform a clear channel assessment (CCA) procedure in response to receiving the DL header information; and

encode uplink (UL) header information for transmission to the base station based on the CCA procedure; and

a memory coupled to the processing circuitry and configured to store the DL header information.

2. The apparatus of claim 1, wherein the processing circuitry is to:

perform a single-shot LBT procedure before the transmission of the uplink header information.

3. The apparatus of claim 2, wherein the single-shot LBT procedure includes a single observation window, and wherein a channel used for the transmission of the uplink header information is assessed as idle when energy detected during the single observation window is below an energy detection (ED) threshold.

4. The apparatus of claim 2, wherein the single-shot LBT procedure includes a first observation window with a duration of 8 us followed by a second observation window with a duration of 5 us.

5. The apparatus of claim 4, wherein a channel used for the transmission of the uplink header information is assessed as idle when energy detected during the first observation window and the second observation window is below an energy detection (ED) threshold.

6. The apparatus of claim 1, wherein the DL header information is UE-specific downlink control information (DCI), the DCI including channel occupancy time (COT).

7. The apparatus of claim 6, wherein the processing circuitry is to:

determine transmission time for transmitting the UL header information based on the COT.

8. The apparatus of claim 1, wherein the processing circuitry is to:

decode DL control information transmitted from the base station in response to the UL header information, the DL control information including physical downlink shared channel (PDSCH) scheduling information; and

decode DL data based on the PDSCH scheduling information.

9. The apparatus of claim 1, further comprising transceiver circuitry coupled to the processing circuitry; and one or more antennas coupled to the transceiver circuitry.

10. A computer-readable storage medium that stores instructions for execution by one or more processors of a user equipment (UE), the instructions to configure the UE for a directional listen before talk (LBT) procedure and to cause the UE to perform operations comprising:

decoding downlink (DL) header information received from a base station, the DL header information associated with a directional LBT procedure performed by the base station;

performing a clear channel assessment (CCA) procedure in response to receiving the DL header information; and

encoding uplink (UL) header information for transmission to the base station based on the CCA procedure.

11. The computer-readable storage medium of claim 10, wherein executing the instructions further causes the UE to perform operations comprising:

performing a single-shot LBT procedure before the transmission of the uplink header information.

12. The computer-readable storage medium of claim 11, wherein the single-shot LBT procedure includes a single observation window, and wherein a channel used for the transmission of the uplink header information is assessed as idle when energy detected during the single observation window is below an energy detection (ED) threshold.

13. The computer-readable storage medium of claim 11, wherein the single-shot LBT procedure includes a first observation window with a duration of 8 us followed by a second observation window with a duration of 5 us.

14. The computer-readable storage medium of claim 13, wherein a channel used for the transmission of the uplink header information is assessed as idle when energy detected during the first observation window and the second observation window is below an energy detection (ED) threshold.

15. The computer-readable storage medium of claim 10, wherein the DL header information is UE-specific downlink control information (DCI), which

may include channel occupancy time (COT), and wherein executing the instructions further causes the UE to perform operations comprising:

determining transmission time for transmitting the UL header information based on the COT.

16. The computer-readable storage medium of claim 10, wherein executing the instructions further causes the UE to perform operations comprising:

decoding DL control information from the base station in response to the UL header information, the DL control information including physical downlink shared channel (PDSCH) scheduling information; and

decoding DL data based on the PDSCH scheduling information.

17. An apparatus to be used in a base station, the apparatus comprising:

processing circuitry, wherein to configure the base station for a directional listen before talk (LBT) procedure, the processing circuitry is to:

perform a directional LBT procedure to detect an available communication channel associated with a pre-defined direction;

encode downlink (DL) header information for transmission to user equipment (UE) using the available communication channel, the DL header information may indicate a channel occupancy time (COT);

decode uplink (UL) header information received from the UE in response to the DL header information; and

a memory coupled to the processing circuitry and configured to store the UL header information.

18. The apparatus of claim 17, wherein the DL header information includes first downlink control information (DCI), the first DCI triggering a clear channel assessment (CCA) procedure at the UE, and the transmission of the UL header information.

19. The apparatus of claim 18, wherein the processing circuitry is to:

encode second DCI for transmission to the UE in response to reception of UL header information, the second DCI including physical downlink shared channel (PDSCH) scheduling information or physical uplink shared channel (PUSCH) scheduling information.

20. The apparatus of claim 18, wherein the DL header information includes first downlink control information (DCI) associated with the UE, the first DCI triggering the CCA procedure at the UE, and wherein the processing circuitry is to:

subsequent to encoding the DL header information, encode second DL header information for transmission to a second UE, the second DL header information including second DCI associated with the second UE, the second DCI triggering a CCA procedure at the second UE.

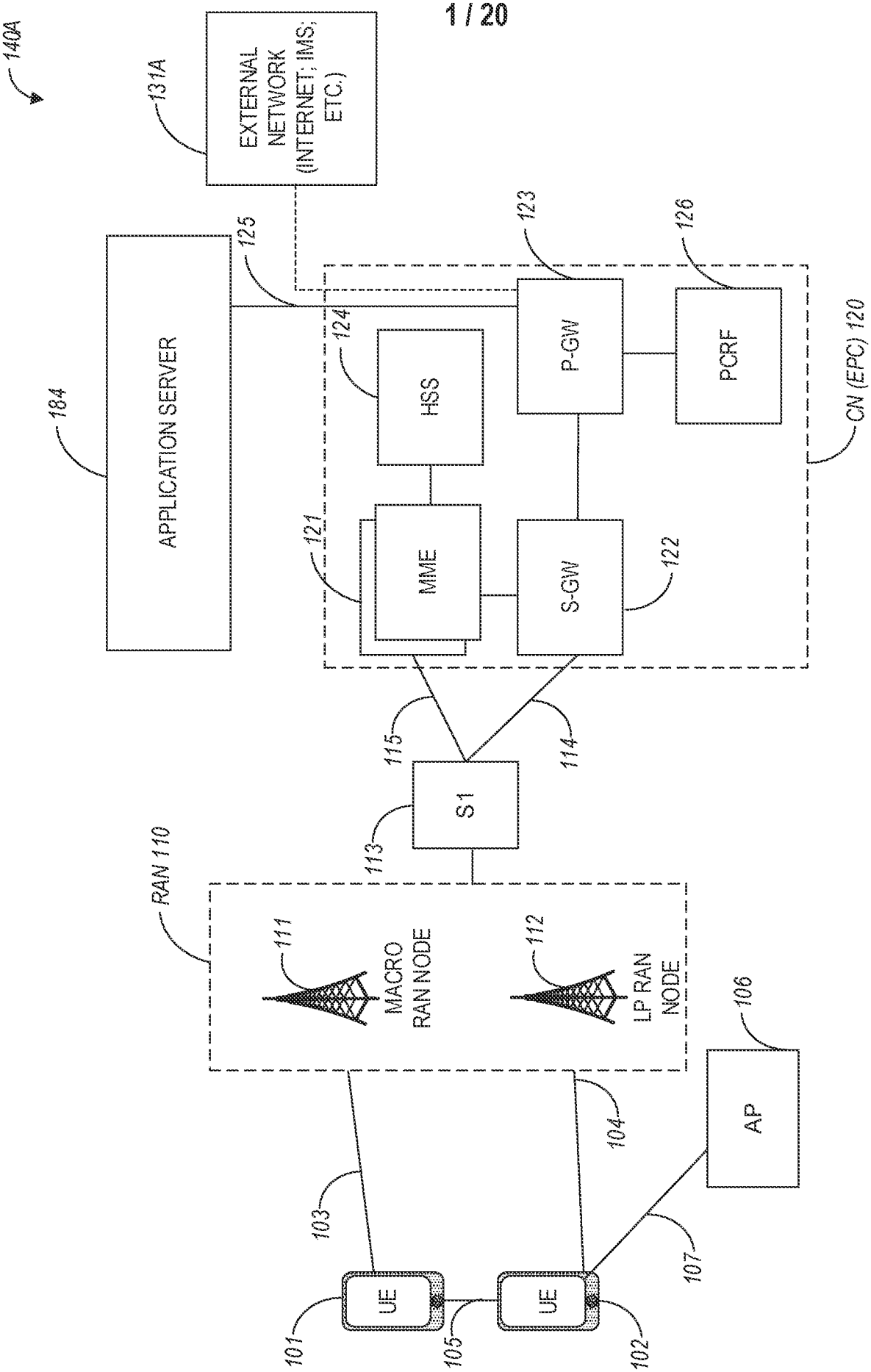
140A
131A
EXTERNAL NETWORK (INTERNET; IMS; ETC.)
125
123
126
184
APPLICATION SERVER
124
HSS
P-GW
PCRF
CN (EPC) 120
121
MME
S-GW
122
115
114
S1
113
RAN 110
111
MACRO RAN NODE
112
LP RAN NODE
106
AP
104
103
107
UE
UE
101
105
102

FIG. 1A

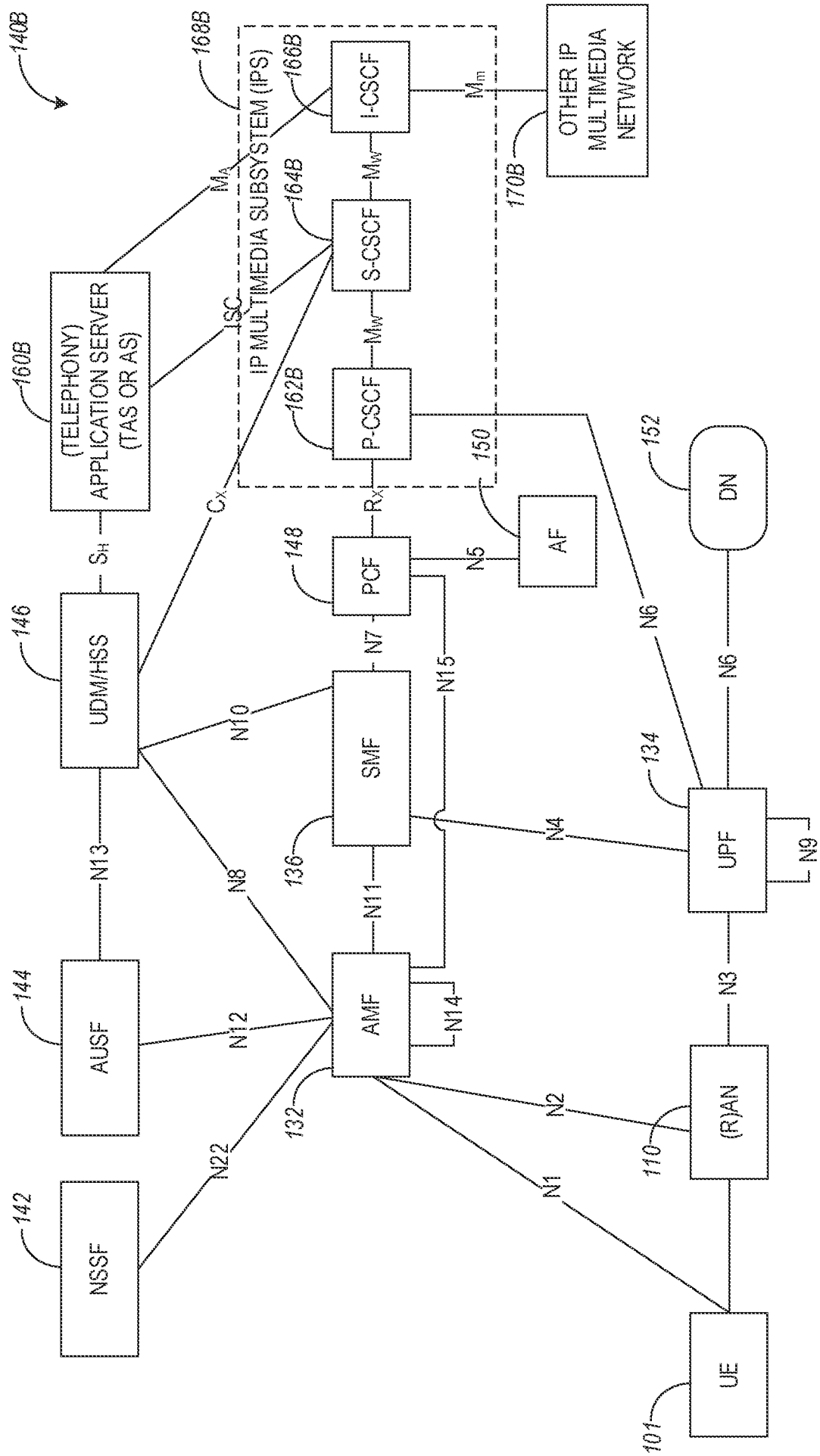
140B
168B
IP MULTIMEDIA SUBSYSTEM (IPS)
166B
I-CSCF
OTHER IP MULTIMEDIA NETWORK
170B
164B
S-CSCF
160B
(TELEPHONY) APPLICATION SERVER (TAS OR AS)
162B
P-CSCF
150
152
DN
AF
148
PCF
146
UDM/HSS
SMF
136
134
UPF
144
AUSF
AMF
132
142
NSSF
(R)AN
110
UE
101
M_A
M_W
M_m
ISC
C_X
R_X
S_H
N5
N6
N7
N10
N15
N13
N8
N4
N9
N11
N12
N14
N3
N22
N2
N1

FIG. 1B

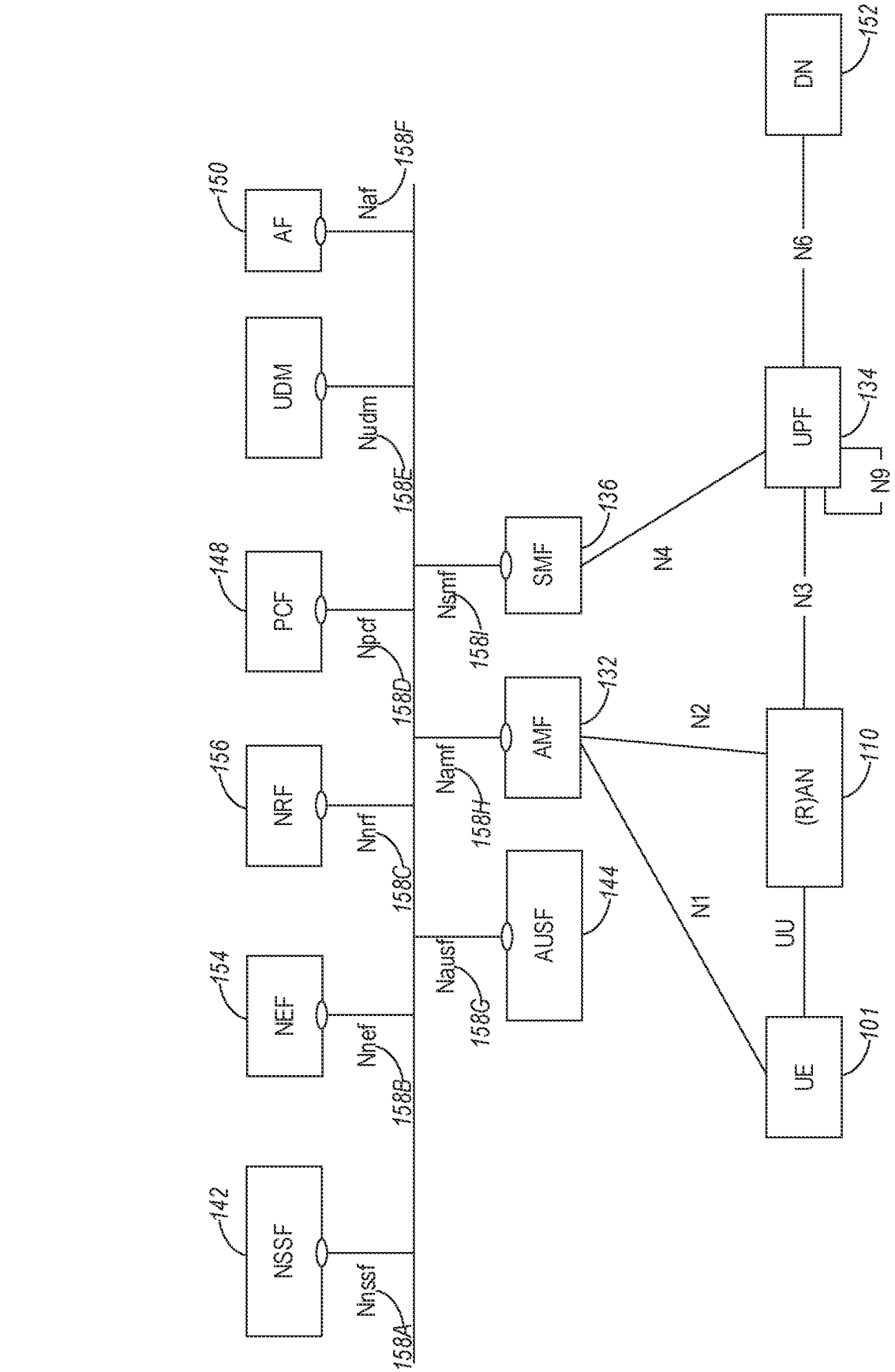
140C
NSSF
142
Nnssf
158A
NEF
154
Nnef
158B
NRF
156
Nnrf
158C
PCF
148
Npcf
158D
UDM
Nudm
158E
AF
150
Naf
158F
Nausf
158G
AUSF
144
Namf
158H
AMF
132
Nsmf
158I
SMF
136
N1
N2
N3
N4
UE
101
(R)AN
110
UPF
134
N6
N9
DN
152
UU

FIG. 1C

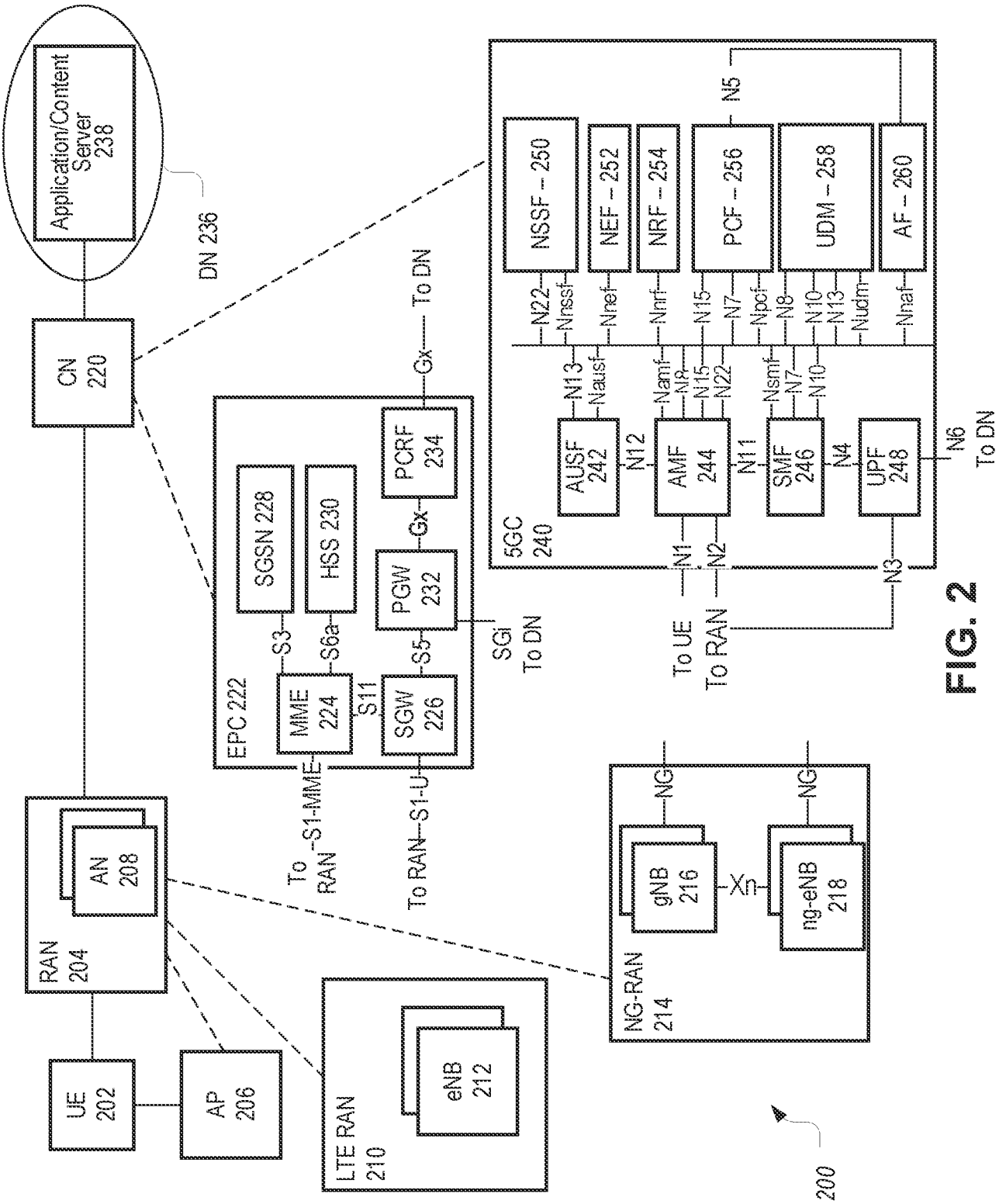
Application/Content Server 238
DN 236
CN 220
To DN
Gx
PCRF 234
SGSN 228
HSS 230
PGW 232
Gx
S3
S6a
S5
MME 224
S11
SGW 226
EPC 222
SGi
To DN
S1-MME
S1-U
To RAN
To RAN
AN 208
RAN 204
UE 202
AP 206
LTE RAN 210
eNB 212
NG
gNB 216
Xn
ng-eNB 218
NG
NG-RAN 214
200
NSSF – 250
NEF – 252
NRF – 254
PCF – 256
UDM – 258
AF – 260
N5
N22
Nnssf
Nnef
Nnrf
N15
N7
Npcf
N8
N10
N13
Nudm
Nnaf
N13
Nausf
Namf
N8
N15
N22
Nsmf
N7
N10
AUSF 242
N12
AMF 244
N11
SMF 246
N4
UPF 248
N6
To DN
5GC 240
N1
N2
N3
To UE
To RAN

FIG. 2

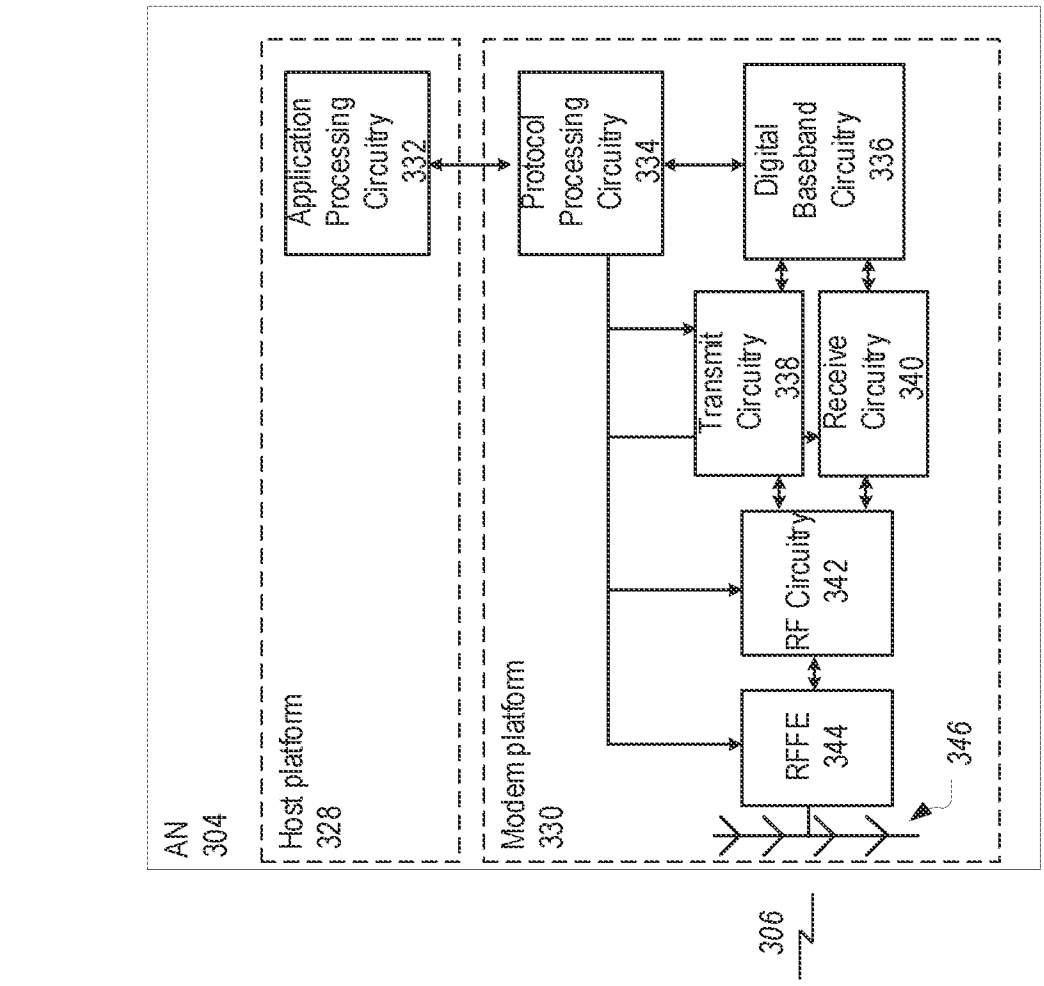
300
UE
302
Host platform
308
Application Processing Circuitry
312
Modem platform
310
Protocol Processing Circuitry
314
Digital Baseband Circuitry
316
Transmit Circuitry
318
Receive Circuitry
320
Radio Frequency Circuitry
322
RFFE
324
326
306
AN
304
Host platform
328
Application Processing Circuitry
332
Modem platform
330
Protocol Processing Circuitry
334
Digital Baseband Circuitry
336
Transmit Circuitry
338
Receive Circuitry
340
RF Circuitry
342
RFFE
344
346

FIG. 3

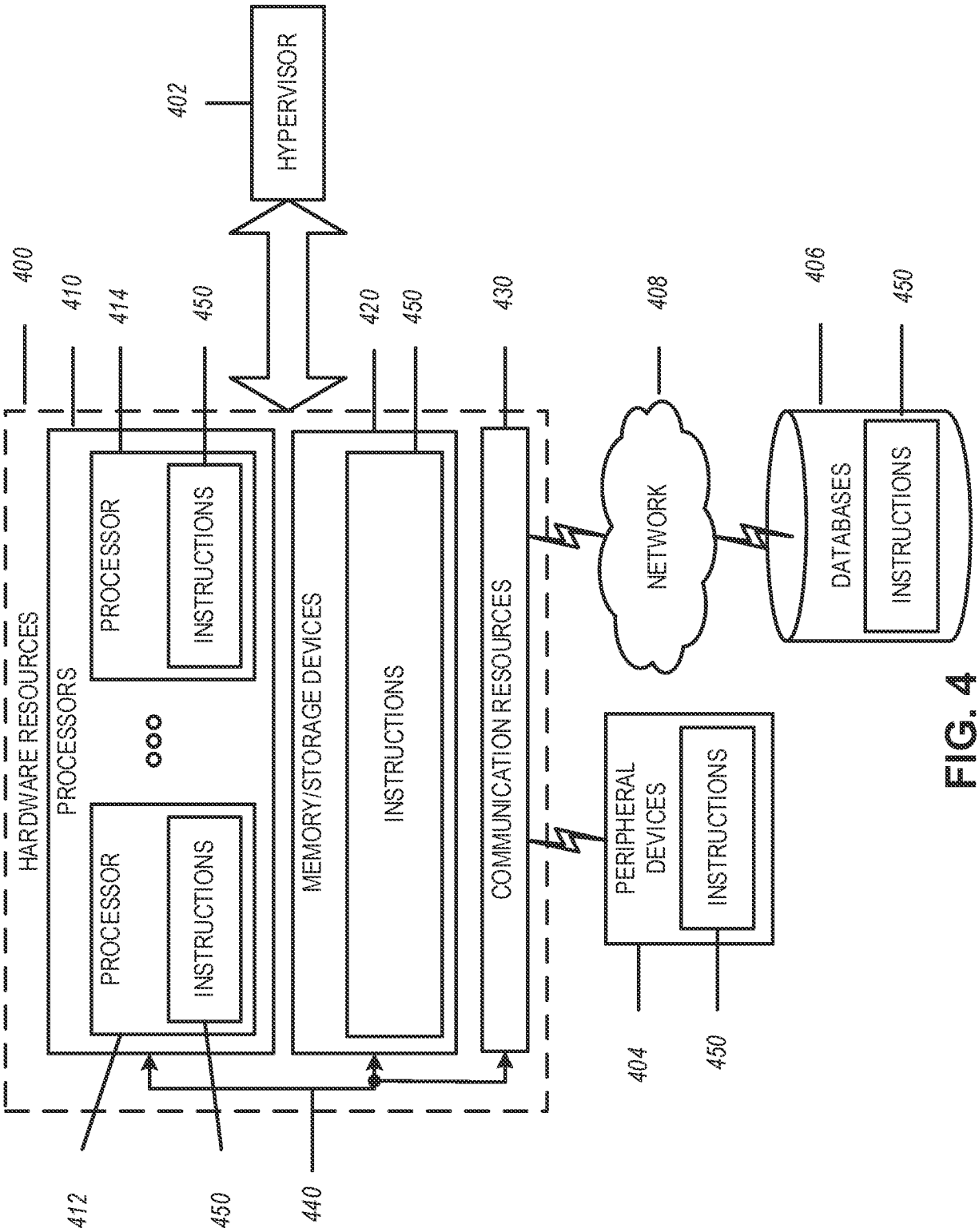
HYPERVISOR
402
HARDWARE RESOURCES
400
PROCESSORS
410
PROCESSOR
INSTRUCTIONS
414
450
MEMORY/STORAGE DEVICES
420
INSTRUCTIONS
450
COMMUNICATION RESOURCES
430
NETWORK
408
DATABASES
406
INSTRUCTIONS
450
PERIPHERAL DEVICES
404
INSTRUCTIONS
450
412
450
440

FIG. 4

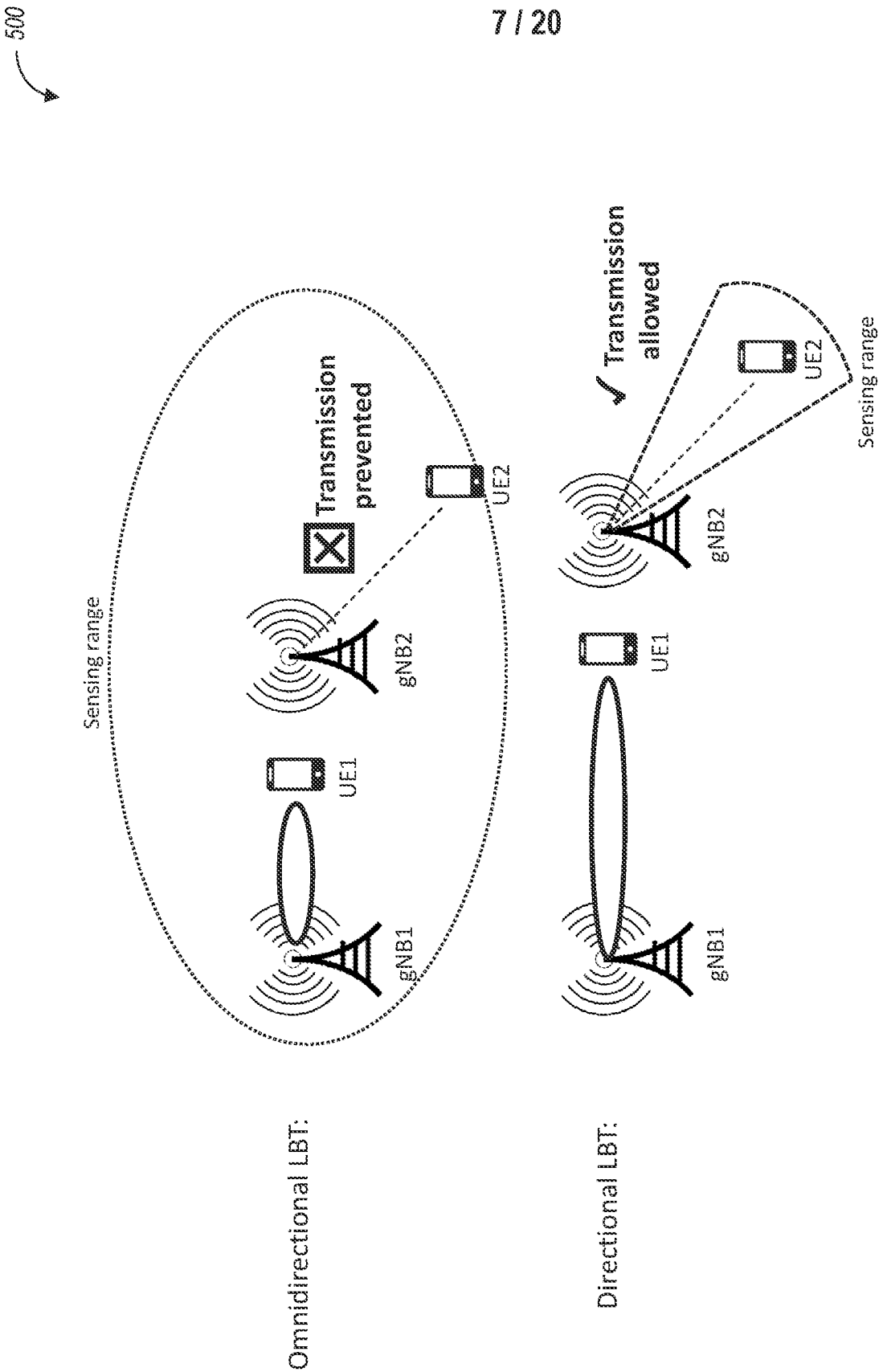
500
Omnidirectional LBT:
Sensing range
gNB1
UE1
gNB2
Transmission prevented
UE2
Directional LBT:
gNB1
UE1
gNB2
Transmission allowed
UE2
Sensing range

FIG. 5

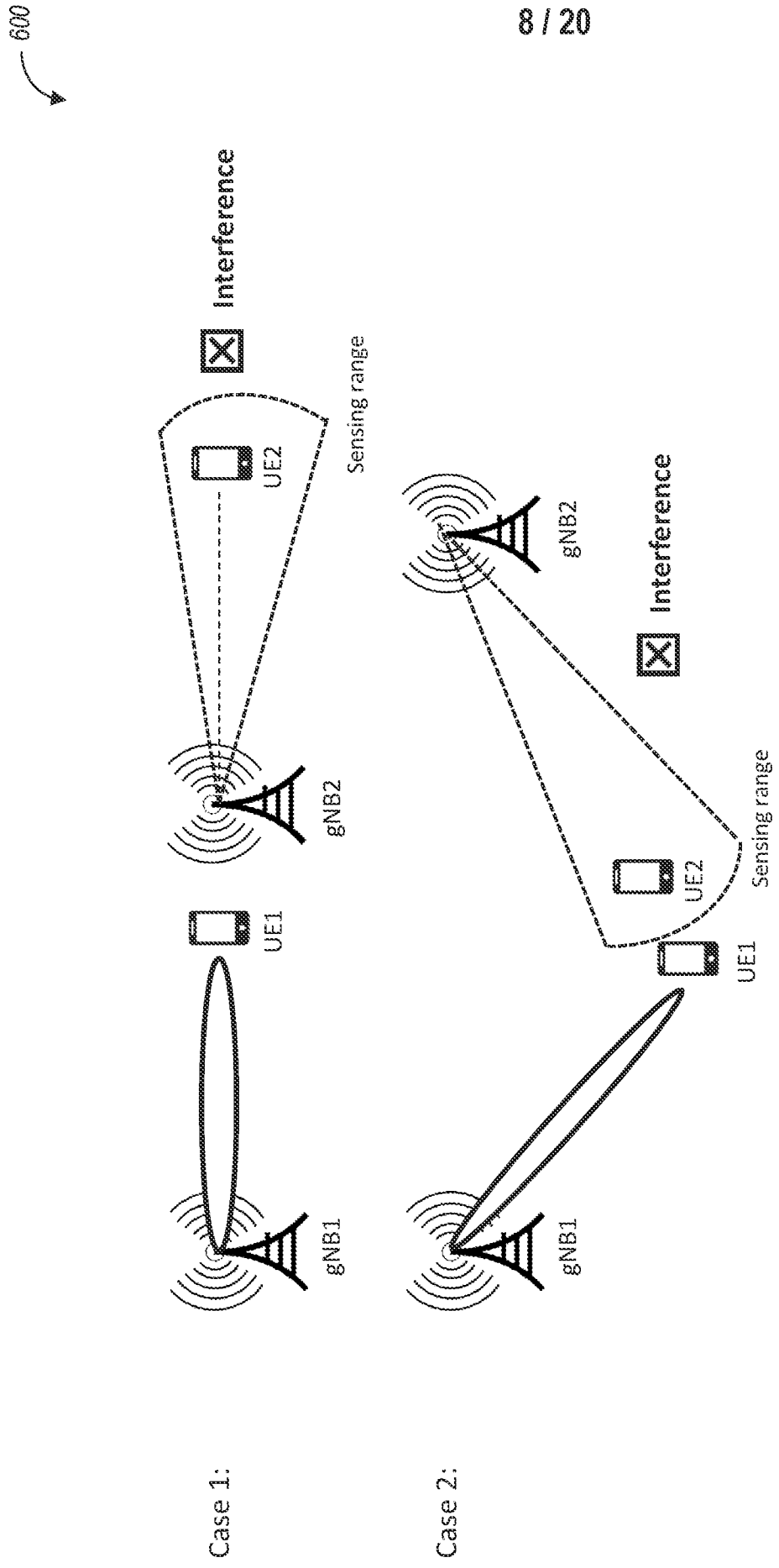
600
Case 1:
gNB1
UE1
gNB2
UE2
Interference
Sensing range
Case 2:
gNB1
UE1
UE2
gNB2
Interference
Sensing range

FIG. 6

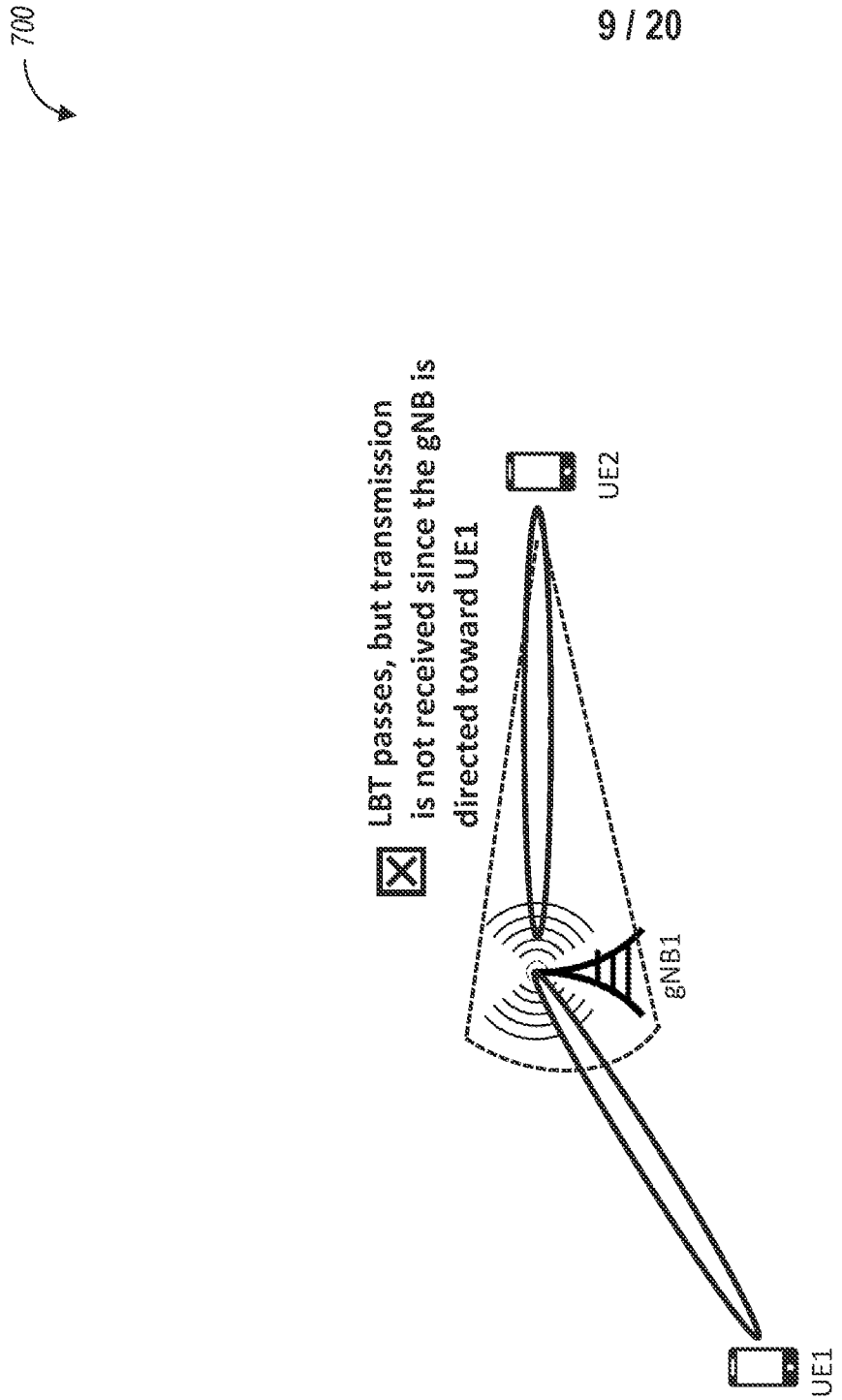
700
LBT passes, but transmission is not received since the gNB is directed toward UE1
UE2
gNB1
UE1

FIG. 7

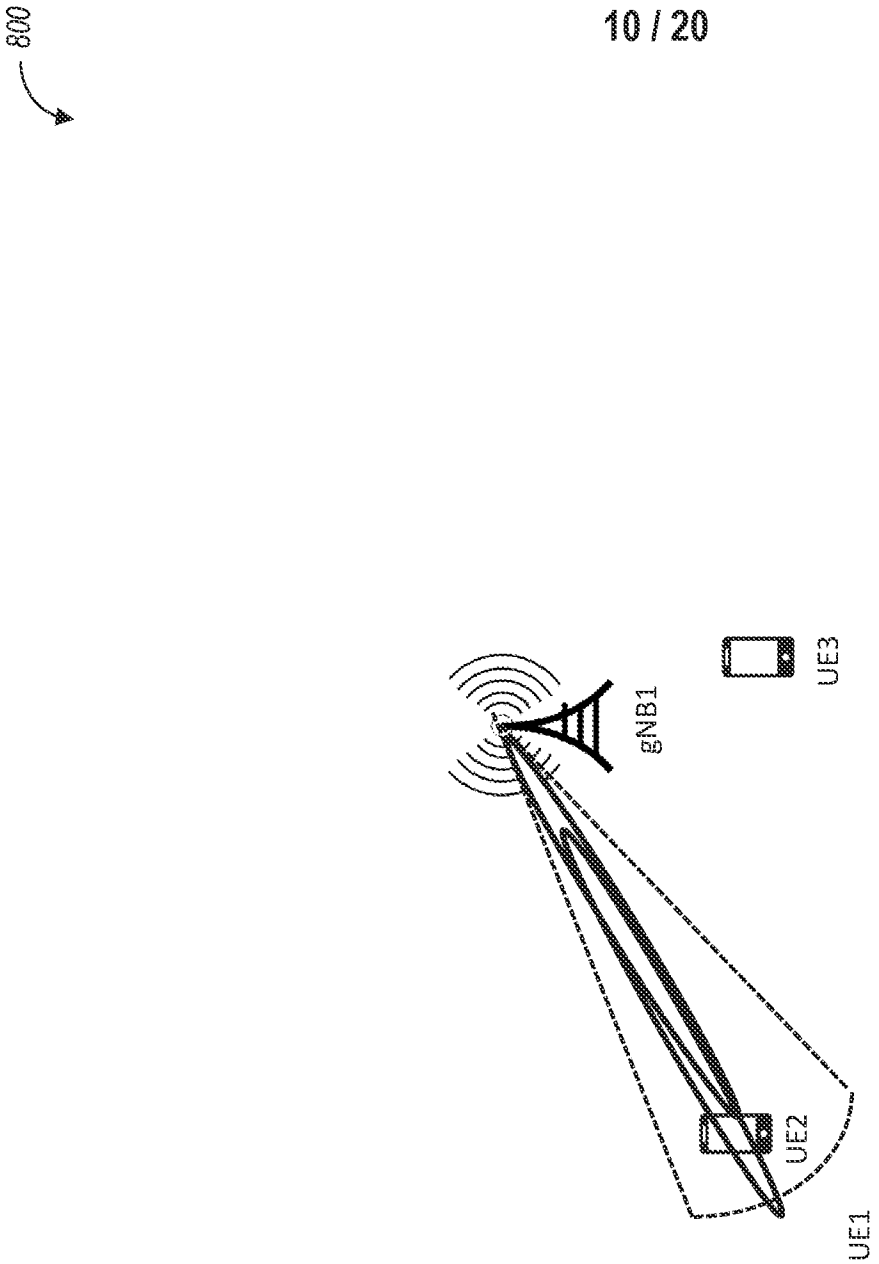

FIG. 8

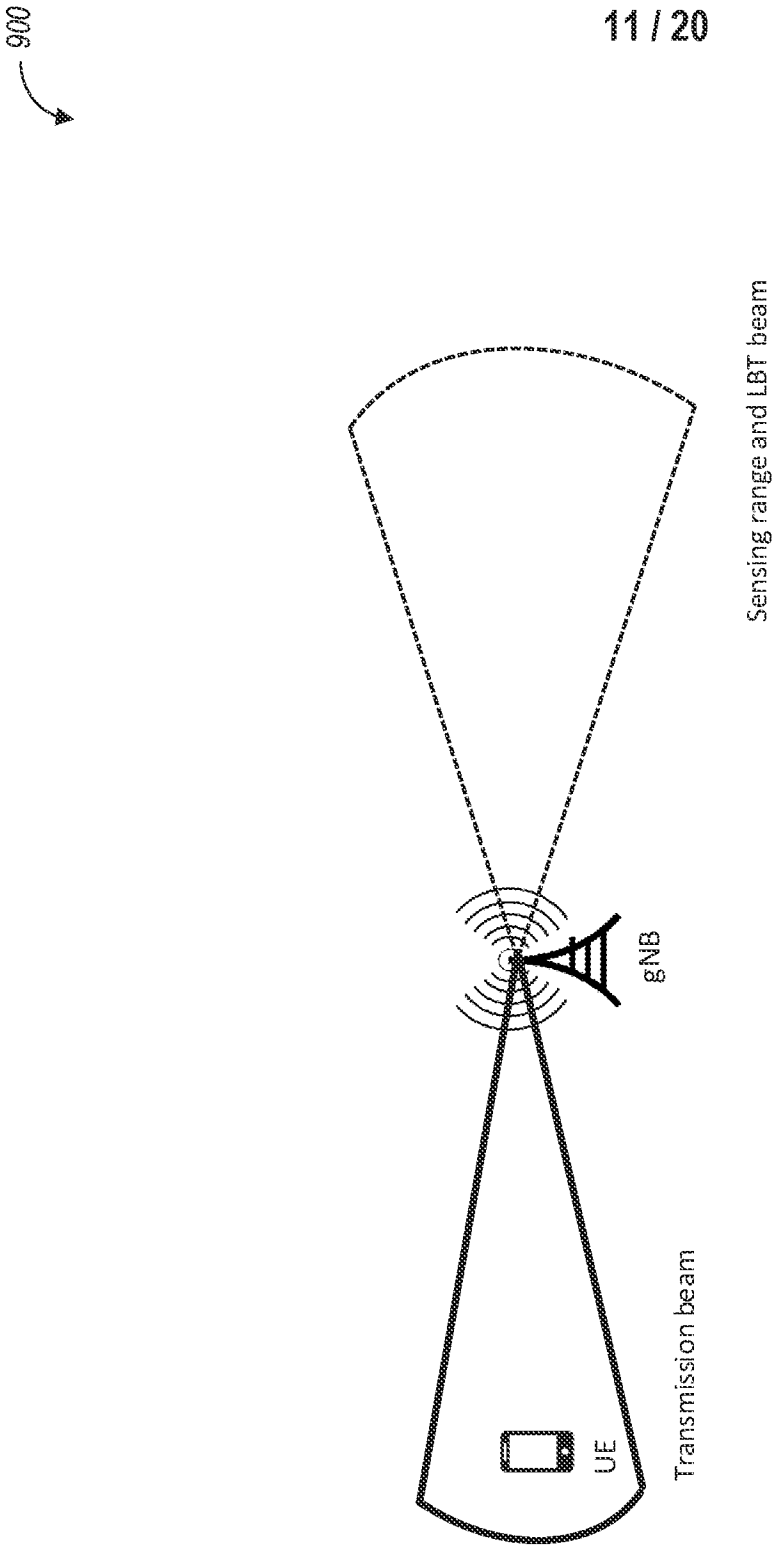

FIG. 9

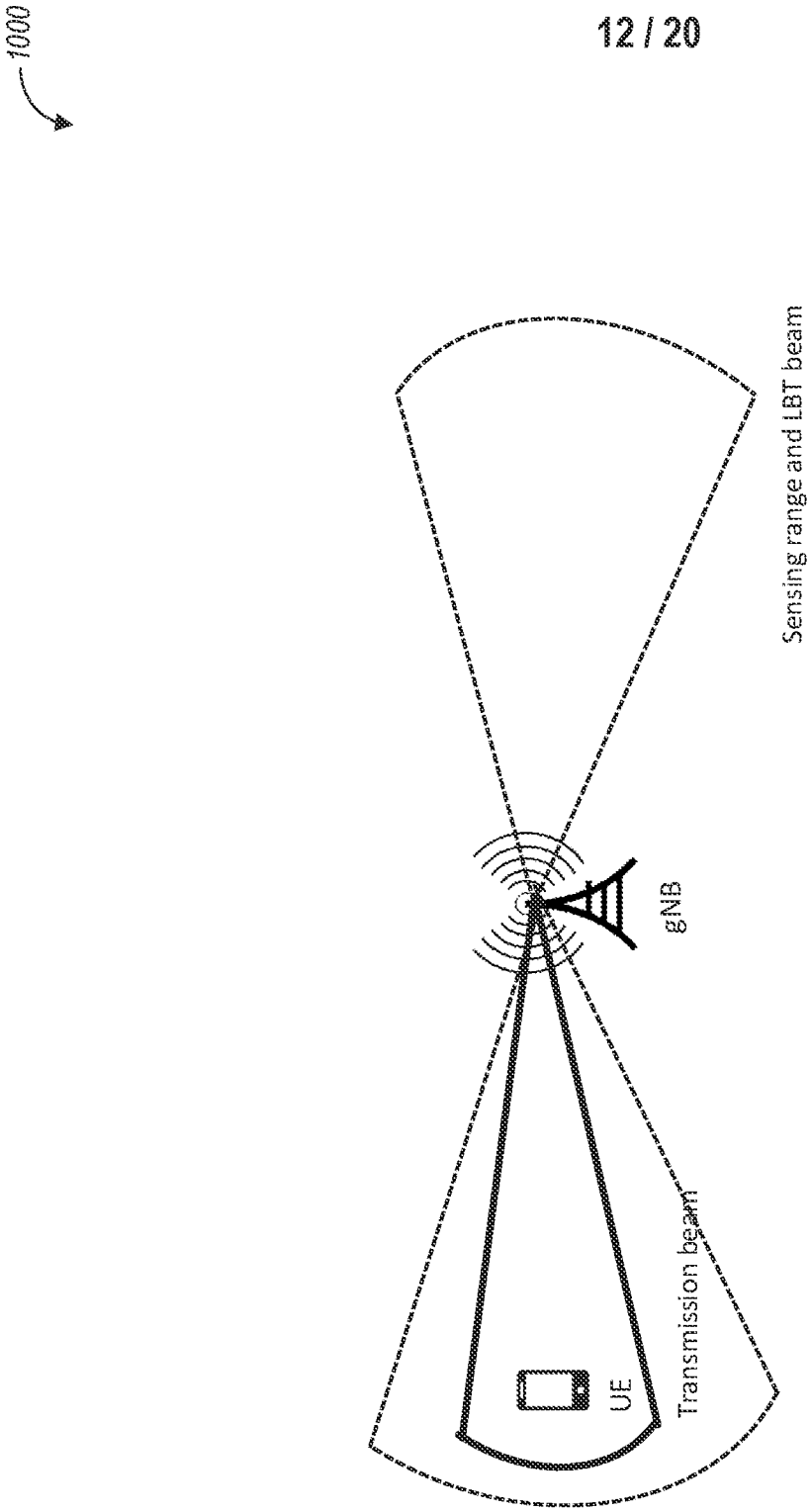

FIG. 10

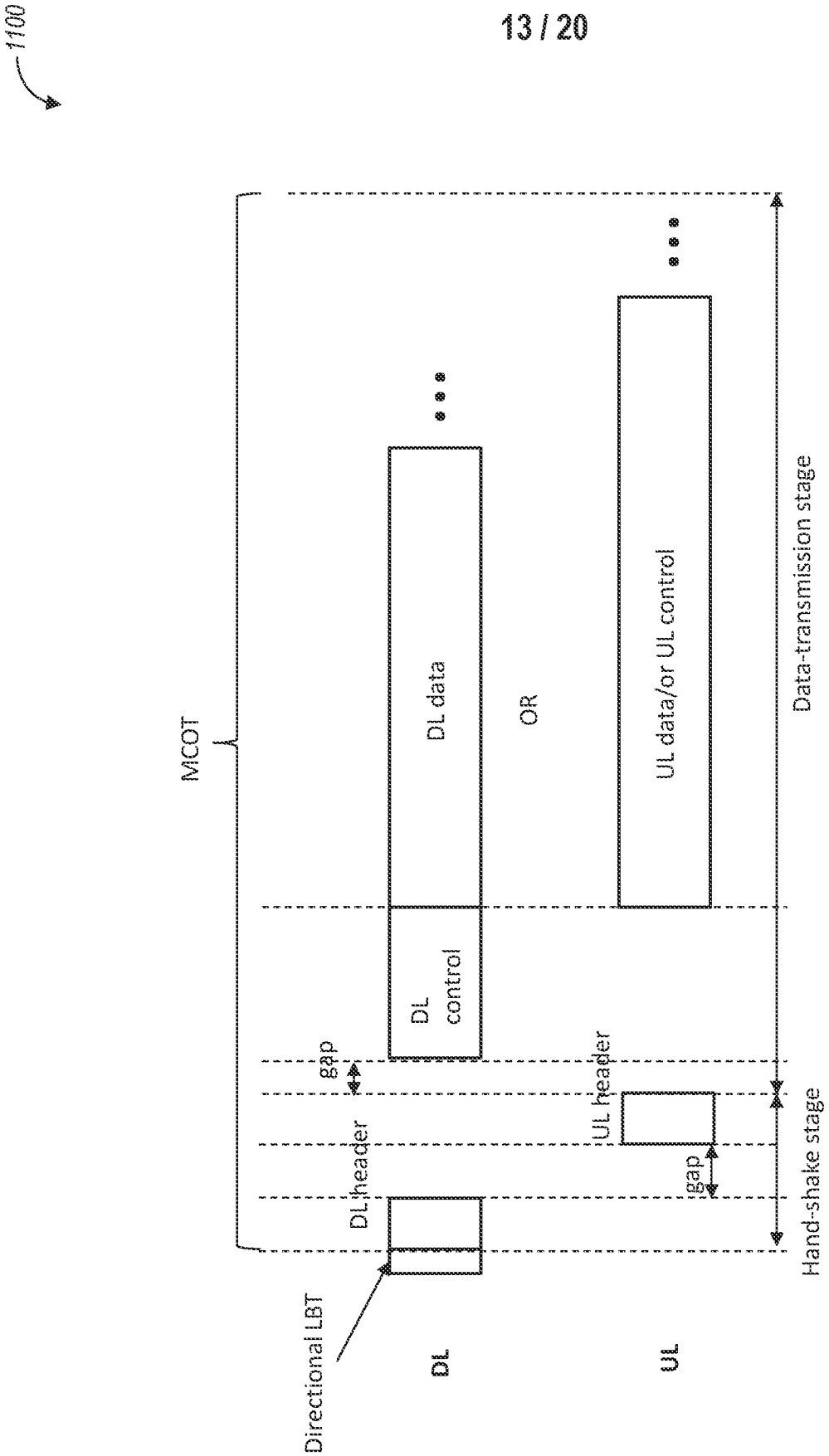
1100
MCOT
DL data
OR
UL data/or UL control
Data-transmission stage
DL control
gap
UL header
DL header
gap
Hand-shake stage
Directional LBT
DL
UL

FIG. 11

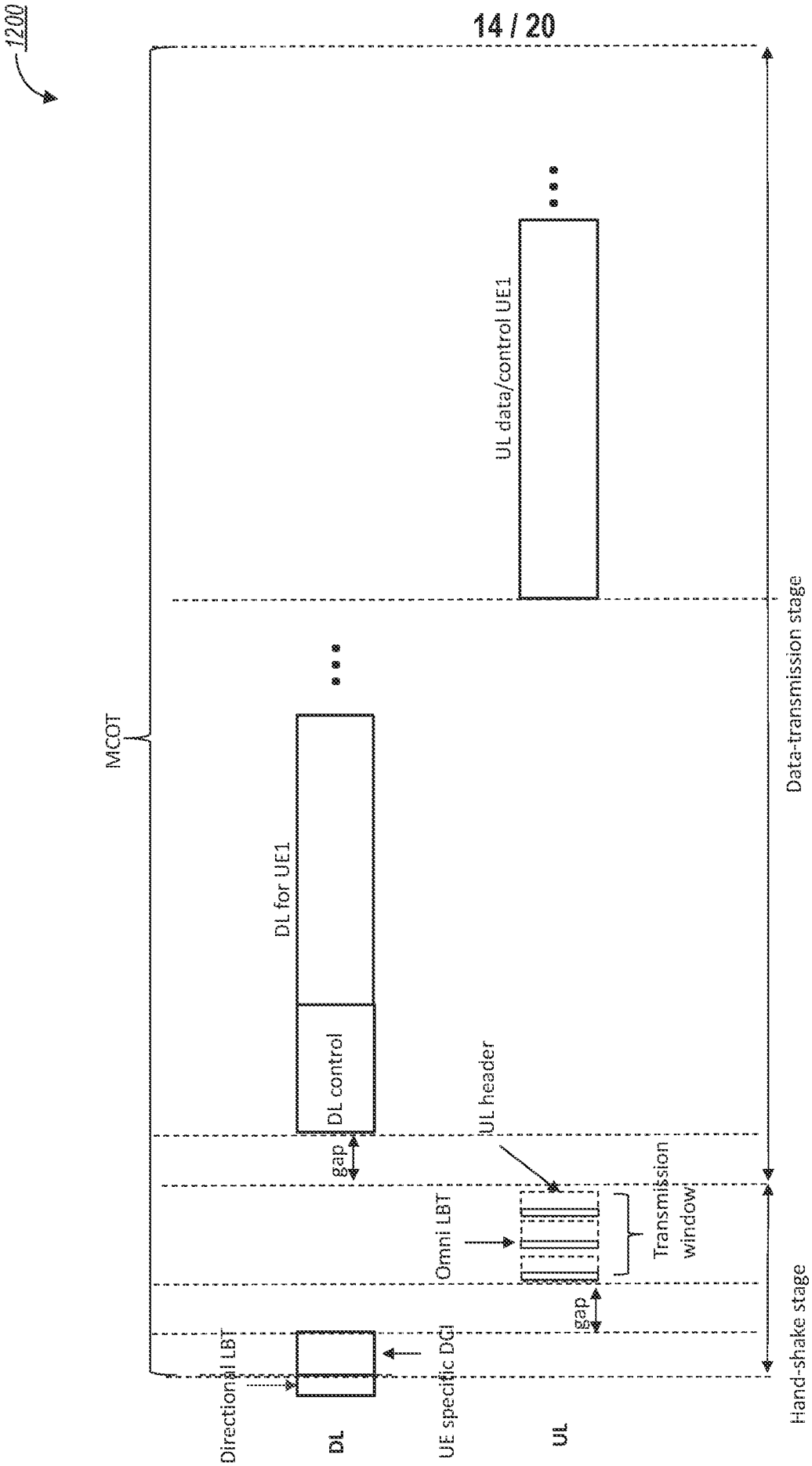
1200
MCOT
Directional LBT
DL
UE specific DCI
UL
Omni LBT
gap
DL control
DL for UE1
UL header
Transmission window
gap
UL data/control UE1
Hand-shake stage
Data-transmission stage

FIG. 12

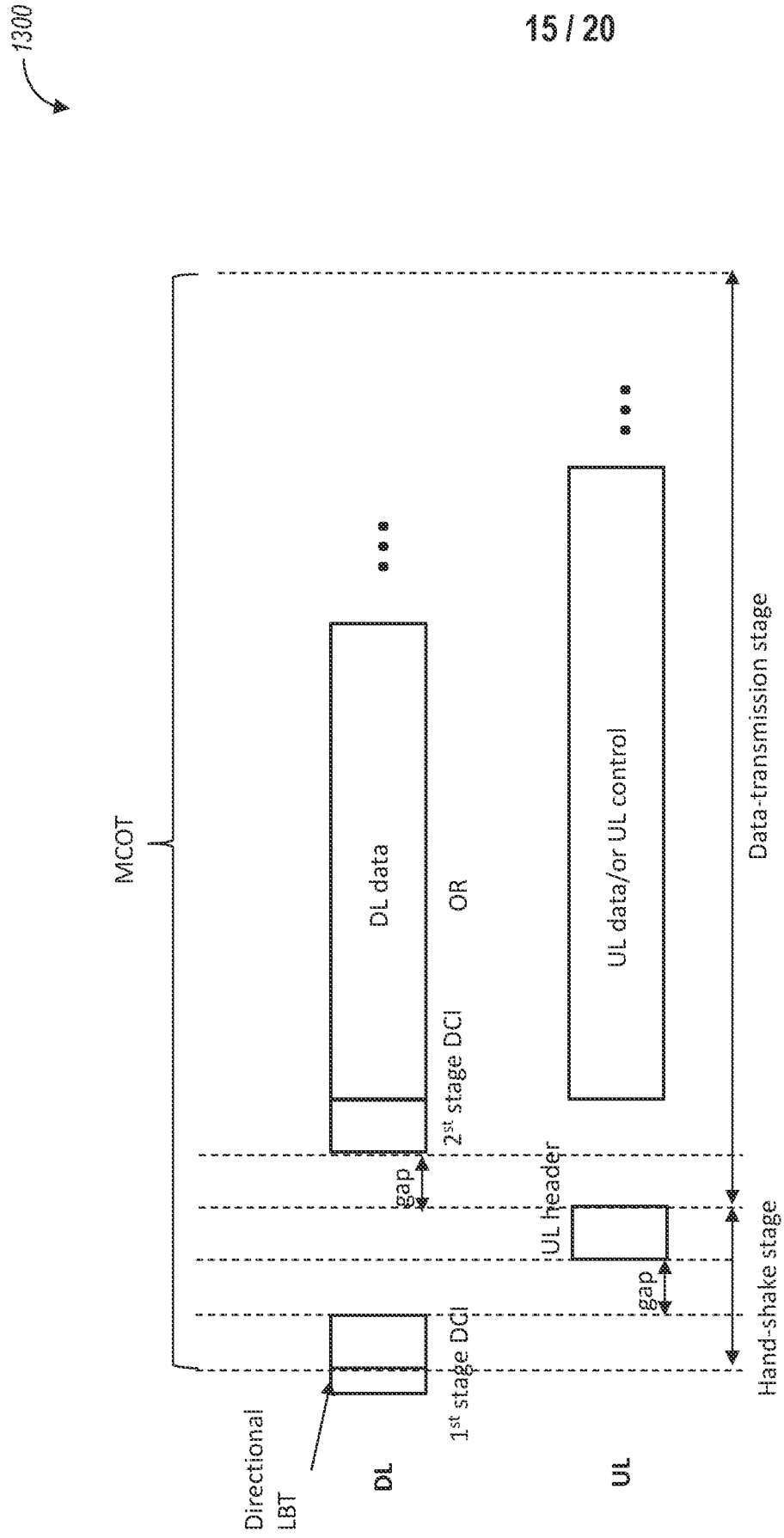
1300
MCOT
DL data
OR
UL data/or UL control
Data-transmission stage
2st stage DCI
gap
UL header
gap
Hand-shake stage
1st stage DCI
Directional LBT
DL
UL

FIG. 13

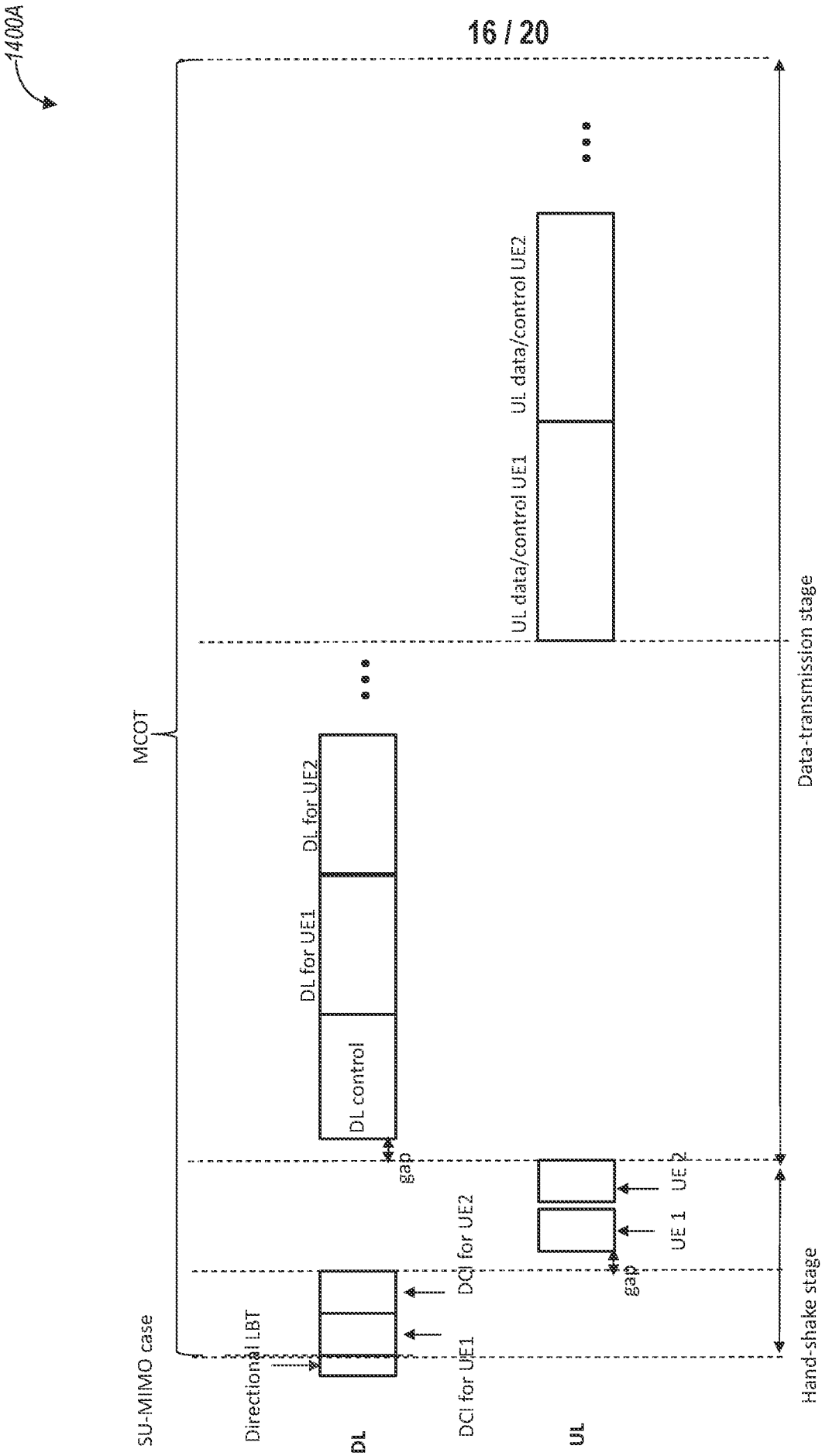
1400A
SU-MIMO case
MCOT
Directional LBT
DL
DCI for UE1
DCI for UE2
DL control
DL for UE1
DL for UE2
gap
UL
UE 1
UE 2
gap
UL data/control UE1
UL data/control UE2
Data-transmission stage
Hand-shake stage

FIG. 14A

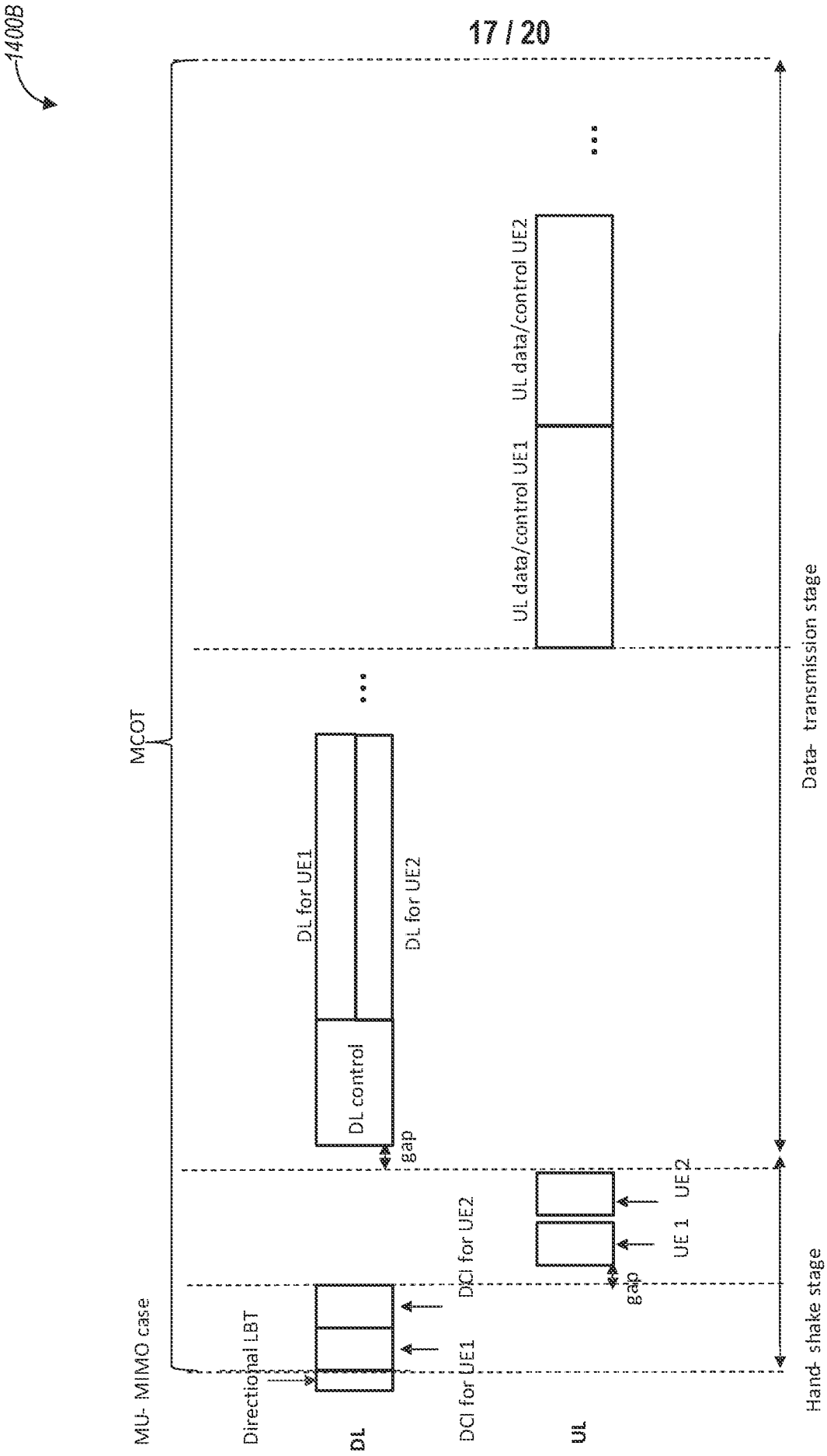
1400B
MU- MIMO case
MCOT
Directional LBT
DL
DCI for UE1
DCI for UE2
DL control
DL for UE1
DL for UE2
gap
UL
UE 1
UE 2
gap
UL data/control UE1
UL data/control UE2
Hand- shake stage
Data- transmission stage

FIG. 14B

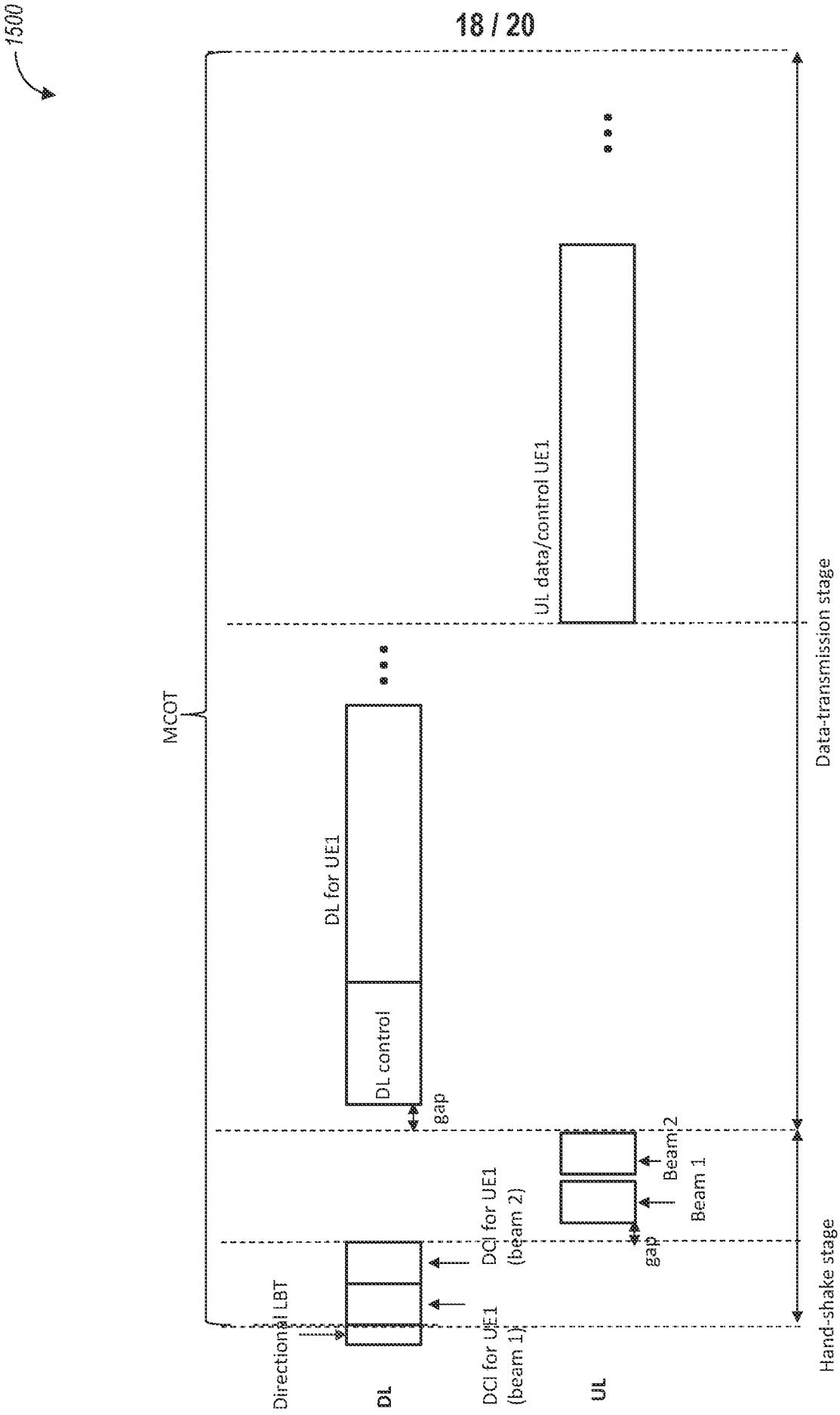
1500
MCOT
Directional LBT
DL
DCI for UE1 (beam 1)
DCI for UE1 (beam 2)
gap
DL control
DL for UE1
UL
gap
Beam 1
Beam 2
UL data/control UE1
Hand-shake stage
Data-transmission stage

FIG. 15

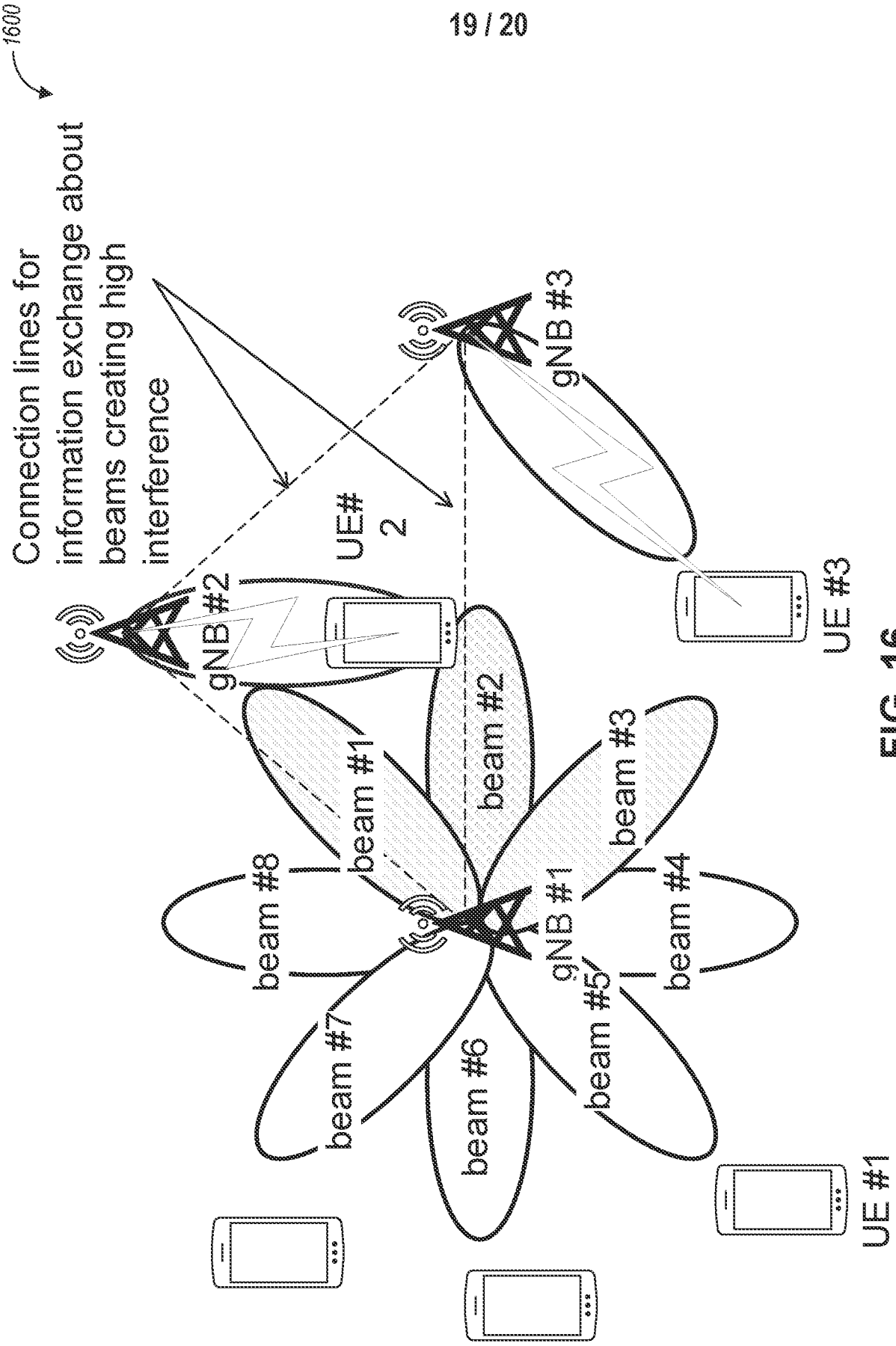
1600
Connection lines for information exchange about beams creating high interference
gNB #2
UE# 2
gNB #3
UE #3
beam #1
beam #2
beam #3
beam #4
beam #5
beam #6
beam #7
beam #8
gNB #1
UE #1

FIG. 16

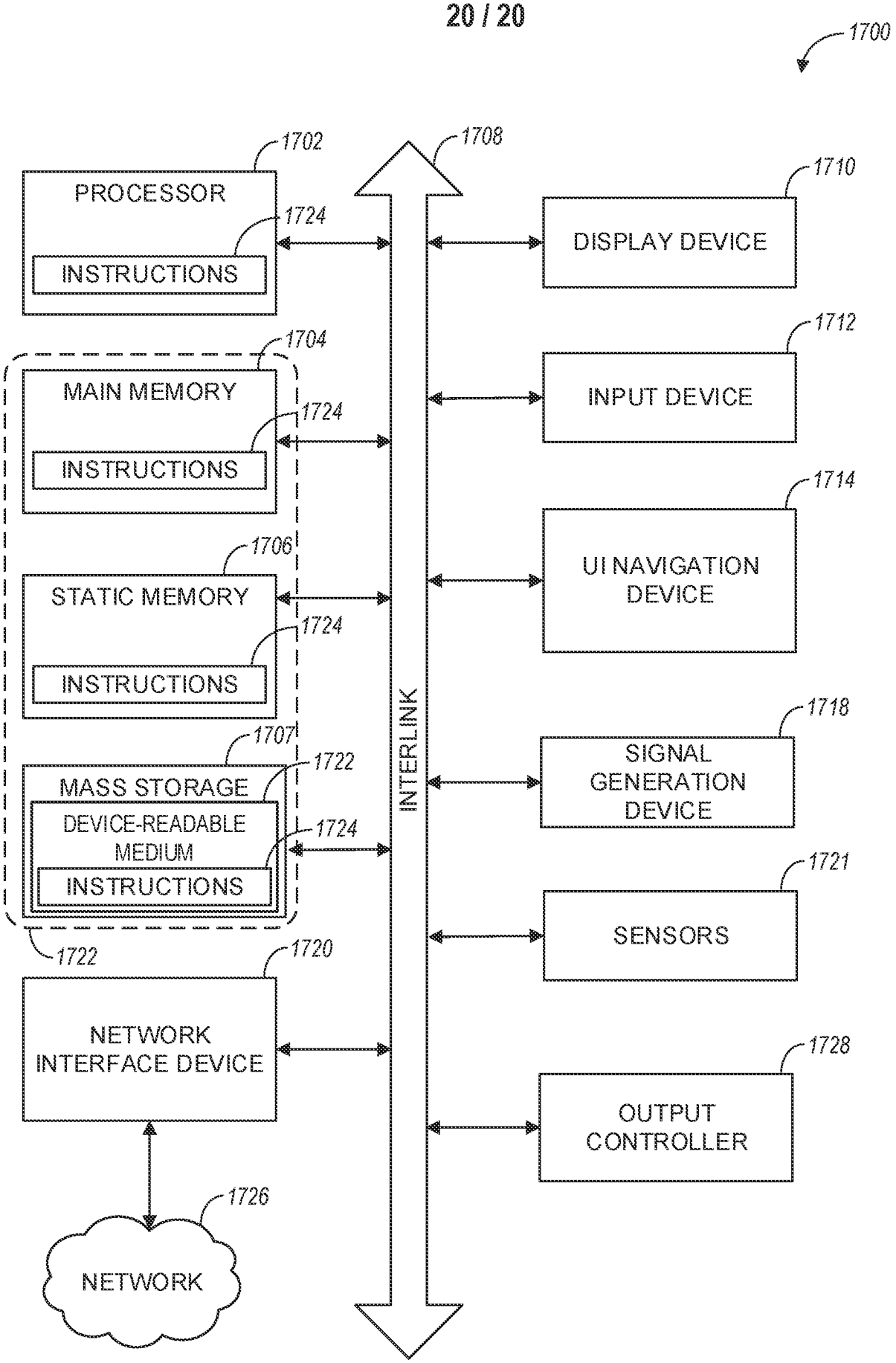
1700
1702
PROCESSOR
1724
INSTRUCTIONS
1704
MAIN MEMORY
1724
INSTRUCTIONS
1706
STATIC MEMORY
1724
INSTRUCTIONS
1707
MASS STORAGE
1722
DEVICE-READABLE MEDIUM
1724
INSTRUCTIONS
1722
1720
NETWORK INTERFACE DEVICE
1726
NETWORK
1708
INTERLINK
1710
DISPLAY DEVICE
1712
INPUT DEVICE
1714
UI NAVIGATION DEVICE
1718
SIGNAL GENERATION DEVICE
1721
SENSORS
1728
OUTPUT CONTROLLER

FIG. 17

INTERNATIONAL SEARCH REPORT

International application No.
PCT/US2021/040631

A. CLASSIFICATION OF SUBJECT MATTER

H04W 74/08(2009.01)i; **H04W 16/28**(2009.01)i; **H04W 74/00**(2009.01)i; **H04W 72/12**(2009.01)i

According to International Patent Classification (IPC) or to both national classification and IPC

B. FIELDS SEARCHED

Minimum documentation searched (classification system followed by classification symbols)

H04W 74/08(2009.01); H04L 1/16(2006.01); H04L 1/18(2006.01); H04W 72/04(2009.01); H04W 74/00(2009.01)

Documentation searched other than minimum documentation to the extent that such documents are included in the fields searched

Korean utility models and applications for utility models
Japanese utility models and applications for utility models

Electronic data base consulted during the international search (name of data base and, where practicable, search terms used)

eKOMPASS(KIPO internal) & Keywords: user equipment, base station, directional listen before talk (LBT) procedure, clear channel assessment (CCA) procedure, downlink header information, uplink header information

C. DOCUMENTS CONSIDERED TO BE RELEVANT

Category*	Citation of document, with indication, where appropriate, of the relevant passages	Relevant to claim No.
Y	US 2019-0342915 A1 (LG ELECTRONICS INC.) 07 November 2019 (2019-11-07) paragraphs [0064], [0094], [0134], [0199], [0256], [0432], [0441]; claims 1-2, 8; and figure 11	1-20
Y	WO 2020-033623 A1 (IDAC HOLDINGS, INC.) 13 February 2020 (2020-02-13) paragraphs [0082], [0088], [0154]; and claim 1	1-20
A	HUAWEI et al., `DL channels and signals in NR unlicensed band', R1-1910043, 3GPP TSG RAN WG1 Meeting #98bis, Chongqing, China, 08 October 2019 section 3	1-20
A	US 2016-0192396 A1 (SAMSUNG ELECTRONICS CO., LTD.) 30 June 2016 (2016-06-30) claims 1-13	1-20
A	WO 2017-171325 A1 (LG ELECTRONICS INC.) 05 October 2017 (2017-10-05) paragraphs [0106]-[0107]; and figure 8	1-20

☐ Further documents are listed in the continuation of Box C. ☑ See patent family annex.

* Special categories of cited documents:
"A" document defining the general state of the art which is not considered to be of particular relevance
"D" document cited by the applicant in the international application
"E" earlier application or patent but published on or after the international filing date
"L" document which may throw doubts on priority claim(s) or which is cited to establish the publication date of another citation or other special reason (as specified)
"O" document referring to an oral disclosure, use, exhibition or other means
"P" document published prior to the international filing date but later than the priority date claimed
"T" later document published after the international filing date or priority date and not in conflict with the application but cited to understand the principle or theory underlying the invention
"X" document of particular relevance; the claimed invention cannot be considered novel or cannot be considered to involve an inventive step when the document is taken alone
"Y" document of particular relevance; the claimed invention cannot be considered to involve an inventive step when the document is combined with one or more other such documents, such combination being obvious to a person skilled in the art
"&" document member of the same patent family

Date of the actual completion of the international search	Date of mailing of the international search report
21 October 2021	**22 October 2021**

Name and mailing address of the ISA/KR	Authorized officer
Korean Intellectual Property Office **189 Cheongsa-ro, Seo-gu, Daejeon** **35208, Republic of Korea**	**YANG, JEONG ROK**
Facsimile No. **+82-42-481-8578**	Telephone No. **+82-42-481-5709**

INTERNATIONAL SEARCH REPORT
Information on patent family members

International application No.
PCT/US2021/040631

Patent document cited in search report	Publication date (day/month/year)	Patent family member(s)	Publication date (day/month/year)
US 2019-0342915 A1	07 November 2019	EP 3407659 A1	28 November 2018
		EP 3407659 A4	17 July 2019
		JP 2019-507537 A	14 March 2019
		JP 2020-010338 A	16 January 2020
		JP 6557423 B2	07 August 2019
		JP 6557423 B6	18 September 2019
		JP 6770614 B2	14 October 2020
		US 10887912 B2	05 January 2021
		US 2021-0092768 A1	25 March 2021
		WO 2017-126935 A1	27 July 2017
WO 2020-033623 A1	13 February 2020	CA 3108907 A1	13 February 2020
		CN 112567668 A	26 March 2021
		EP 3834327 A1	16 June 2021
		KR 10-2021-0055036 A	14 May 2021
		SG 11202101187 RA	30 March 2021
		TW 202015447 A	16 April 2020
US 2016-0192396 A1	30 June 2016	US 9794960 B2	17 October 2017
		WO 2016-108584 A1	07 July 2016
WO 2017-171325 A1	05 October 2017	EP 3410808 A1	05 December 2018
		EP 3410808 A4	07 August 2019
		US 10805945 B2	13 October 2020
		US 2019-0110307 A1	11 April 2019
		US 2020-0413430 A1	31 December 2020