(No Model.)

C. I. MITCHELL.

LANTERN.

No. 590,550. Patented Sept. 21, 1897.

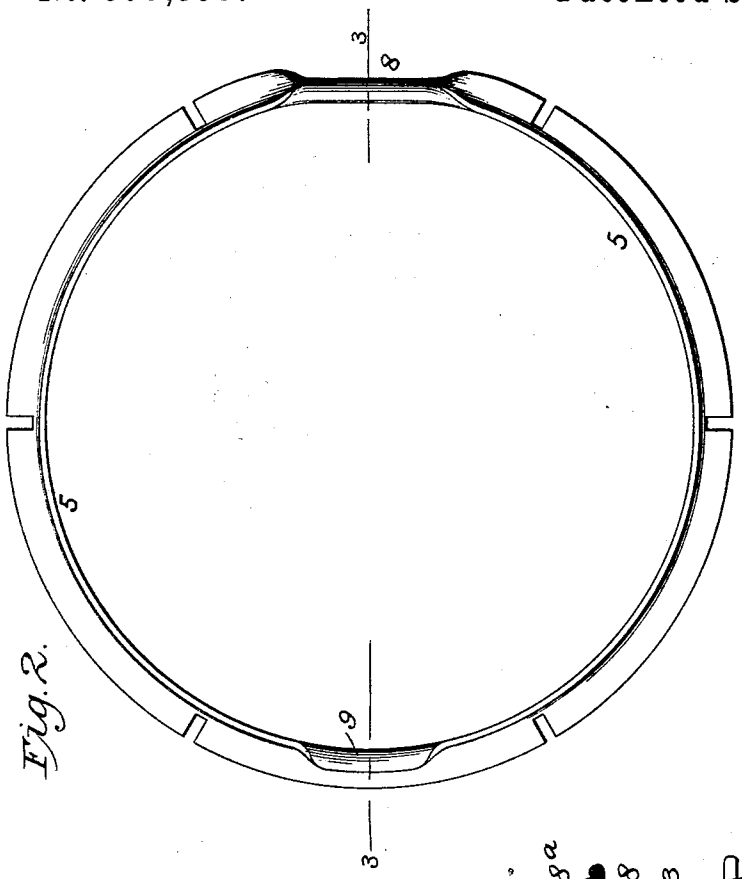

Fig. 2.

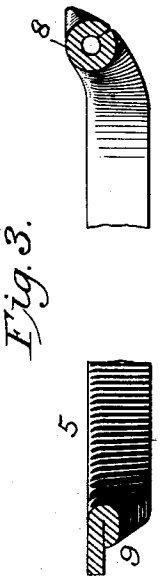

Fig. 3.

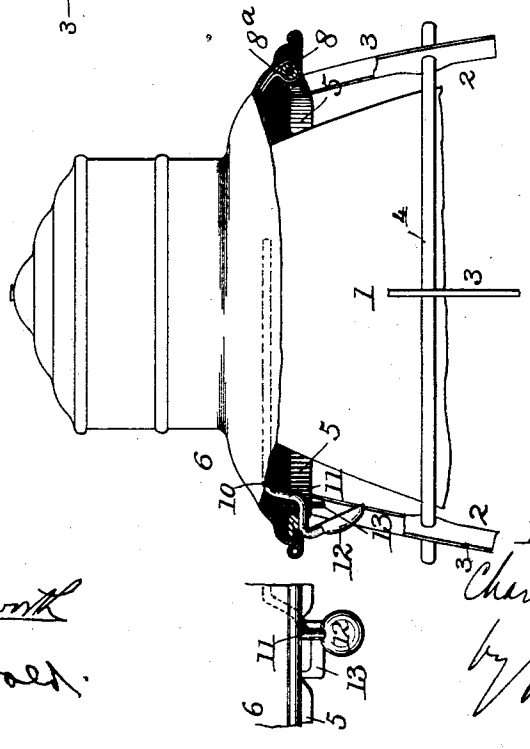

Fig. 1.

Witnesses;
Sidney P. Hollingsworth
Arthur B. Seibold.

Inventor;
Charlie I. Mitchell,
by G. H. W. T. Mann
Atty.

THE NORRIS PETERS CO., PHOTO-LITHO., WASHINGTON, D. C.

UNITED STATES PATENT OFFICE.

CHARLIE I. MITCHELL, OF CHICAGO, ILLINOIS.

LANTERN.

SPECIFICATION forming part of Letters Patent No. 590,550, dated September 21, 1897.

Application filed May 27, 1897. Serial No. 638,379. (No model.)

To all whom it may concern:

Be it known that I, CHARLIE I. MITCHELL, of the city of Chicago, in the county of Cook and State of Illinois, have invented certain new and useful Improvements in Lanterns, of which the following is a specification, reference being had to the accompanying drawings and to the numerals of reference marked thereon.

My invention relates more particularly to a hand-lantern—such, for instance, as is used on railroads and by trainmen and is provided with a metallic guard for the protection of the glass globe, the cap of the lantern being hinged to said guard and retained in closed position by a catch acting therewith. The invention is, however, applicable to any kind of lantern having a top hinged to an upper ring of the character hereinafter described, and is intended to provide a convenient, simple, strong, and durable means whereby the cap may be hinged to the upper ring and the ring employed in connection with the catch without weakening or impairing in any way the strength or rigidity of the ring. Heretofore in lanterns of this class where the upper ring has been composed of steel or other metallic substance not round in cross-section no provision, so far as I am aware, has been made for using the ring itself as the pintle of the hinge or providing a recess or depression in the ring for coaction with the spring-catch attached to the cap save at the expense of weakening the ring, and inasmuch as a lantern having a plate-metal upper ring possesses strength and durability to a greater extent than a lantern having a wire ring my improvement becomes of importance.

In the accompanying drawings, Figure 1 is a vertical section through the upper part of a lantern embodying my invention. Fig. 2 is an under side view of the upper ring. Fig. 3 is an enlarged section thereof on the line 3 3.

Similar numerals of reference indicate similar parts in the respective figures.

1 is the glass globe of a lantern, protected by a guard 2, formed in this example of metal, preferably steel, ribs 3, radially arranged around the globe and secured by solder or otherwise to horizontally-disposed rings 4, here shown of wire, and the upper ring 5, to which latter my invention particularly relates. The ring 5, which, by preference, is made of steel and of ┐ form, is that to which the top or cap 6 of the lantern is hinged and with which its spring-catch engages.

In order to form the pintle or cylindrical body constituting one member of the hinge, I simply bend, press, or turn over the vertical and horizontal members of the ┐-shaped ring 5, as shown, to a length necessary for the production of a suitable pintle 8 for the hinge, and upon or around this pintle is placed the cylindrical strap 8^a, secured to the top or cap 6, which strap forms, as will be understood, the other member of the hinge. It will thus be seen that a pintle is produced without cutting away any portion of the ring 5 and that the strength of the ring is in no sense impaired by bending or pressing the material, so as to cause the part forming the pintle to become cylindrical in cross-section, but that the part of the ring employed in forming the pintle will be as strong as any other portion of the ring. The same idea is followed in adapting the upper ring 5 as a member of the locking device for securing the top or cap to the ring when the cap is to be closed and locked. In order to do this, a short portion of the vertical member of the ┐-shaped ring opposite the hinge is bent upward and outward, so as to form a depression 9.

The spring-catch consists of a wire 10, soldered or otherwise secured to the under side of the cap at one side thereof, as shown, and curving to a point opposite the hinge, where it is given the form shown at 11, passing through a slotted guard 13 and terminating in a thumb-button 12. The part 11 of the wire 10, which projects through the slotted guard 13, stands in a horizontal plane, and when the cap is locked occupies a position at one end of the slot in the guard 13 and under the bent-up portion of the vertical member of the ┐-shaped upper ring, there being sufficient length of depression formed by the bending of said member to allow the part 11 of the wire 10 to be pushed to the other end of the slot by the pressure of the thumb against the button, the wire riding upon or against such bent-up portion of the ring until it reaches such end of the slot, when the bent end of the wire will be free to clear the interior surface of the ring 5, and the ordi-

nary spring 12 in the dome of the cap will cause the cap to be automatically lifted upon its hinge. In closing the cap the rounded exterior of the thumb-button will first engage the inner surface of the ring 5 about midway of the depression 9, and as the cap is forced down the portion 11 of the wire 10 will be gradually brought to the extremity of the slot in the guard 13 (opposite the end normally occupied) and of the depression 9, when the resiliency of the wire 10 will suddenly cause its part 11 to be sprung to the other end of the slot, bringing the outer end of the wire 10 about centrally of the depression 9 and under the bent portion of the ring at such depression, thereby effecting the lock.

It is evident that the upper ring need not necessarily be made of ┐ form, as several other forms of flanged metal may be used. For instance, T shape and U shape will serve the purpose equally as well.

It is highly important in lanterns of this class, which are subjected to rough usage and liable to receive blows and shocks, that they shall possess great strength and that the upper ring, because of the frequent necessity for opening and closing the lamp, shall be stiff and not liable to be bent or fractured; hence the importance of preserving the integrity and full strength of the metal of the ring, as provided for in my invention.

Having described my invention, I claim—

1. In a lantern having a guard, the combination of an upper flanged metallic guard-ring, and a hinged cap, the said ring and its flange being bent to form a round pintle, substantially as described.

2. In a lantern having a guard, the combination of an upper flanged metallic guard-ring, a hinged cap, and a locking device, the said ring and flange being bent to form a round pintle for the hinge, and a projecting lip for the locking device, substantially as described.

In testimony whereof I have hereunto set my hand and affixed my seal this 23d day of April, 1897.

CHARLIE I. MITCHELL. [L. S.]

Witnesses:

G. L. WALTERS,

HENRY OSTROM MELBY.