PCT WORLD INTELLECTUAL PROPERTY ORGANIZATION
International Bureau

INTERNATIONAL APPLICATION PUBLISHED UNDER THE PATENT COOPERATION TREATY (PCT)

(51) International Patent Classification 6 : A21C 15/02, A21B 5/02 | A1

(11) International Publication Number: **WO 96/37109**

(43) International Publication Date: 28 November 1996 (28.11.96)

(21) International Application Number: PCT/US96/06730

(22) International Filing Date: 10 May 1996 (10.05.96)

(30) Priority Data:
08/450,488 26 May 1995 (26.05.95) US

(71) Applicant: CONEWICH ENTERPRISES L.P. [US/US]; Suite 320, 8989 Rio San Diego, San Diego, CA 92108 (US).

(72) Inventor: GOLDSTEIN, Ward, J.; 311 Glenmont Drive, Solana Beach, CA 92075 (US).

(74) Agents: PROCTOR, Katherine et al.; Brown, Martin, Haller & McClain, 1660 Union Street, San Diego, CA 92101-2926 (US).

(81) Designated States: AL, AM, AT, AU, AZ, BB, BG, BR, BY, CA, CH, CN, CZ, DE, DK, EE, ES, FI, GB, GE, HU, IS, JP, KE, KG, KP, KR, KZ, LK, LR, LS, LT, LU, LV, MD, MG, MK, MN, MW, MX, NO, NZ, PL, PT, RO, RU, SD, SE, SG, SI, SK, TJ, TM, TR, TT, UA, UG, UZ, VN, ARIPO patent (KE, LS, MW, SD, SZ, UG), Eurasian patent (AM, AZ, BY, KG, KZ, MD, RU, TJ, TM), European patent (AT, BE, CH, DE, DK, ES, FI, FR, GB, GR, IE, IT, LU, MC, NL, PT, SE), OAPI patent (BF, BJ, CF, CG, CI, CM, GA, GN, ML, MR, NE, SN, TD, TG).

Published
With international search report.

(54) Title: CONICAL FOOD ARTICLE AND PROCESS FOR MAKING SAME

(57) Abstract

An edible food container is formed by wrapping an elongate flat strip of uncooked bread dough around a conically-shaped mandrel to form a plurality of spiral turns with an overlap between adjacent turns of the spiral. The resultant uncooked dough cone is then baked to form an edible, cone-shaped container of soft bread. The bread cone is removed from the mandrel and the hollow interior of the cone is filled with a selected filling.

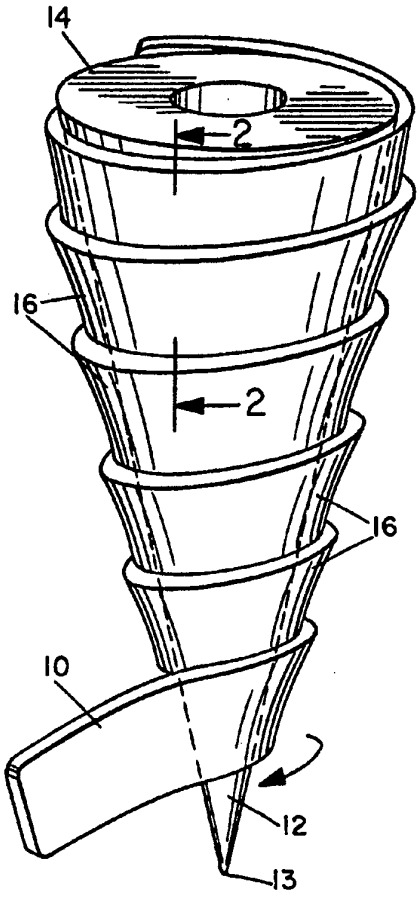

FOR THE PURPOSES OF INFORMATION ONLY

Codes used to identify States party to the PCT on the front pages of pamphlets publishing international applications under the PCT.

AM	Armenia	**GB**	United Kingdom	**MW**	Malawi
AT	Austria	**GE**	Georgia	**MX**	Mexico
AU	Australia	**GN**	Guinea	**NE**	Niger
BB	Barbados	**GR**	Greece	**NL**	Netherlands
BE	Belgium	**HU**	Hungary	**NO**	Norway
BF	Burkina Faso	**IE**	Ireland	**NZ**	New Zealand
BG	Bulgaria	**IT**	Italy	**PL**	Poland
BJ	Benin	**JP**	Japan	**PT**	Portugal
BR	Brazil	**KE**	Kenya	**RO**	Romania
BY	Belarus	**KG**	Kyrgystan	**RU**	Russian Federation
CA	Canada	**KP**	Democratic People's Republic of Korea	**SD**	Sudan
CF	Central African Republic			**SE**	Sweden
CG	Congo	**KR**	Republic of Korea	**SG**	Singapore
CH	Switzerland	**KZ**	Kazakhstan	**SI**	Slovenia
CI	Côte d'Ivoire	**LI**	Liechtenstein	**SK**	Slovakia
CM	Cameroon	**LK**	Sri Lanka	**SN**	Senegal
CN	China	**LR**	Liberia	**SZ**	Swaziland
CS	Czechoslovakia	**LT**	Lithuania	**TD**	Chad
CZ	Czech Republic	**LU**	Luxembourg	**TG**	Togo
DE	Germany	**LV**	Latvia	**TJ**	Tajikistan
DK	Denmark	**MC**	Monaco	**TT**	Trinidad and Tobago
EE	Estonia	**MD**	Republic of Moldova	**UA**	Ukraine
ES	Spain	**MG**	Madagascar	**UG**	Uganda
FI	Finland	**ML**	Mali	**US**	United States of America
FR	France	**MN**	Mongolia	**UZ**	Uzbekistan
GA	Gabon	**MR**	Mauritania	**VN**	Viet Nam

CONICAL FOOD ARTICLE AND PROCESS FOR MAKING SAME

CROSS-REFERENCES TO RELATED APPLICATIONS

This application is a Continuation-In-Part of pending Application Serial No. 07/973,904 filed November 20, 1992, which was a Continuation-In-Part of Application Serial No. 07/715,628 filed June 14, 1991 (abandoned).

BACKGROUND OF THE INVENTION

The present invention relates to a conically-shaped edible food article and to a process for making such an article.

There are a number of common articles of food which are formed in a conical shape. One of the best known of these is the conical ice cream cone, which is generally formed by pouring liquid waffle dough into a mold or else forming a single sheet of dough into a cone shape. These types of dough form rigid, brittle shells.

U.S. Patent No. 3,410,691 of Stanley describes a conical food article formed by cutting a flattened circle of dough into four equal segments or sector pieces, and wrapping an individual piece around a conical mandrel before baking. U.S. Patent No. 4,795,652 of Cooper describes a similar technique in which a flattened strip of pretzel dough is cut into parallelogram-shaped pieces and each piece is wrapped onto a mandrel before baking.

SUMMARY OF THE INVENTION

It is an object of the present invention to provide a new and improved food article and process for making such an article.

According to one aspect of the present invention, a food article is provided which comprises a conical receptacle of soft bread dough formed by wrapping a strip

of uncooked bread dough spirally around a conical mandrel starting at the widest end of the mandrel to form a plurality of successive spiral turns of the dough strip with an overlap between adjacent turns and adjacent turns adhered to one another by baking to form a contiguous conical structure with a hollow interior for receiving an edible filling.

According to another aspect of the present invention, a process for making such a food article is provided, which comprises the steps of forming a continuous, elongate strand of bread dough, winding the strand spirally around a conical mandrel starting at the widest end of the mandrel to form a plurality of adjacent spiral turns with an overlap between adjacent turns, and curing and cooking the wrapped spiral strand on the mandrel to form a conical receptacle of soft bread consistency.

Preferably, the strand is a flat strip and is wrapped with an overlap of around ⅓ to ½ the width of the strip between adjacent turns of the strip, so that the overlapping portions of adjacent turns will adhere to each other to form a sealed, integral conical receptacle.

This food receptacle can be made conveniently and economically, and can be filled with a variety of foods and eaten while being hand held. Since a soft, bread dough cone is formed, it can be used as a sandwich substitute which is particularly convenient and advantageous, since it avoids the problems of any filling spilling from the sides of a sandwich.

BRIEF DESCRIPTION OF THE DRAWINGS

The present invention will be better understood from the following detailed description of a preferred embodiment of the invention, taken in conjunction with the accompanying drawings, in which like reference numerals refer to like parts, and in which:

Figure 1 is a pictorial view showing the cone being wound on a mandrel;

Figure 2 is a sectional view taken on line 2-2 of Figure 1; and

Figure 3 illustrates the finished cooked product.

DESCRIPTION OF THE PREFERRED EMBODIMENT

An edible food article and the process for making it according to a preferred embodiment of the present invention are illustrated in Figures 1, 2 and 3. The process basically comprises first mixing a bread dough in accordance with procedures which are well known in the art. Preferably, a high gluten flour is used for the dough. The bread dough is then formed into a relatively narrow, elongate flat strip or strand 10. Strip 10 is then wrapped spirally around a conically-shaped mandrel or baking pan 12 as best illustrated in Figure 1, starting from the widest end 14 of the cone and wrapping to the apex 13 of the mandrel. The strip is stretched as it is wound onto the mandrel. By using high gluten flour, a more stretchy dough is produced, so that the strip can be stretched without breaking. Wrapping is continued until the lower part of the mandrel is covered, and adjacent turns 16 of the spiral are wrapped so that there is an overlap between them, as illustrated in Figure 2, so as to form a contiguous conical structure.

The strips 10 may be formed in a number of different ways, both manual and automated. For example, a flat sheet of dough could be formed by rolling into a rectangular shape, and the sheet could then simply be cut into flat strips or strands in a similar manner to the making of flat noodles. Automated methods of pressing and stamping may be used. The strip 10 preferably has a thickness of ¼" ± ⅛", and a width of 1" ± ¼".

Although pressing of the dough on the mandrel is not necessary, some pressure may be applied if desired. The overlapping portions 18 of adjacent spiral turns will tend to adhere to one another due to the tension in the strip as it is wound, so that there are no gaps in the structure. Preferably, the adjacent turns are overlapped to a height of around ⅛ to ½ of the overall strip width or height. As illustrated in Figure 1, the mandrel 12 has a bore or recess 19 in its flat or widest end 14 for receiving a suitable tool such as a post or spindle for holding the mandrel while the dough strand 10 is wrapped around it. The dough strip may be wound on the mandrel by hand or by a suitable automated machine.

The strip 10 of dough is preferably wound from the widest end of the cone to the apex, as illustrated in Figures 1 and 2. This has the advantage that the overlapping outer edge 22 faces upwardly rather than downwardly, reducing the risk of leakage of food from the cone. However, it may alternatively be wrapped in the opposite direction, starting at the apex and winding up to the widest end.

Once the dough strip has been spirally wrapped around the mandrel between its opposite ends, the uncooked dough cone is sprayed lightly with a solution of water, baking soda and cornstarch. The baking soda will create a brownish color in the outer surface of the product when cooked. The cornstarch helps to glue or cement the wrapped cone together. The sprayed cone is then baked in an oven while on the mandrel to form the finished product. The mandrel acts as a baking mold. As the dough is baked, the spiral turns will expand to adhere more firmly to one another and become more tightly wrapped, sealing the small opening at the apex of the cone. The cone is preferably baked in a steam generation oven. Steam is supplied to the oven during the initial phase of baking. Preferably, steam is supplied for a period of 30 seconds to one minute at the start of baking, with the oven set at 350°F to 400°F.

Baking is continued until the dough receptacle is baked to a golden brown, before removing from the oven. The baked, cone-shaped dough receptacle is then removed from the mandrel. The conical bread receptacle will have the soft consistency of baked bread, and will be essentially moisture-tight.

By adding a large amount of steam to the oven at the start of the baking process, the dough will be moistened and will be puffed up. The adhesion between overlapping turns of the strip is thereby increased substantially. Also, the need for proofing or allowing rising time before baking is eliminated. However, the amount of steam used is significantly more than in conventional dough steaming, in order to provide the desired adhesion and sealing between adjacent spiral turns of the strip. In normal baking, steam is supplied for only 15 seconds, whereas in this method, steam is supplied for at least 30 seconds.

As seen in Figure 3, the baked, cone-shaped receptacle 20 will have a spirally extending, upwardly facing edge 22 extending on its outer surface marking the junction between adjacent turns of the dough strip. The receptacle has a soft bread consistency, and has an internal, conical recess 24 where selected sandwich fillings can be placed. Any selected filling may be used, such as meats, poultry, sea food, vegetables, dairy products and fruits, and the fillings may be hot or cold. The cone-shaped bread receptacle forms a sealed, edible container for the filling, reducing the risk of spilling and mess which can result when eating traditional sandwiches with open sides.

The bread cone or receptacle 20 is an extremely versatile food container and may be served as a container for breakfast, salad, lunch, dinner, snack or dessert, depending on the choice of bread dough used and the selected food filling. It may be made in a range of different sizes for holding snacks or full meals, for example. The bread cone itself and the fillings can be consumed without the need of any eating utensils, making it

extremely useful as a portable meal-in-one. In view of the way the dough strip is wrapped on the mandrel, the baked receptacle is unlikely to unwind as it is eaten, since the upper end 26 of the strip is on the inside of the cone, further reducing the risk of food leaking or dripping from the receptacle.

Although a preferred embodiment of the invention is described above by way of example only, it will be understood by those skilled in the field that modifications may be made to the disclosed embodiment without departing from the scope of the present invention, which is defined by the appended claims.

I CLAIM:

CLAIMS

1. A process for making an edible food container, comprising the steps of:

forming an uncooked flat strip of uncooked bread dough;

winding the elongate strip of uncooked bread dough spirally around a conical mandrel starting at the widest end of the mandrel to form a plurality of successive spiral turns of the dough strip along the height of the mandrel up to the apex of the mandrel, with an overlap between adjacent spiral turns; and

cooking the wrapped spiral strip on the mandrel in an oven cooking cycle, to form a bread cone having the consistency of soft bread which is resistant to liquid leakage out of the cone for receiving any selected filling.

2. The process as claimed in claim 1, wherein an overlap of between ⅓ to ½ of the width of the strip is provided between adjacent turns.

3. The process as claimed in claim 1, wherein the strip is stretched as it is wound on the mandrel.

4. The process as claimed in claim 1, including the step of supplying steam to the oven for a predetermined time period at the start of the cooking cycle.

5. The process as claimed in claim 4, wherein the time period is in the range from 30 seconds to one minute.

6. The process as claimed in claim 4, wherein the oven temperature is in the range from 350°F to 400°F.

7. The process as claimed in claim 1, wherein the dough is made from a high gluten flour.

8. The process as claimed in claim 1, including the step of spraying the wrapped spiral strip with a mixture of water, baking soda and cornstarch prior to baking.

9. An edible food container, comprising:

a hollow cone of baked bread dough having the soft consistency of baked bread, the cone having an open, upper end which is the widest end of the cone and a sealed, lower end which is the apex of the cone;

the cone comprising an elongate flat strip of bread dough wound spirally into a conical shape with an overlap between adjacent spiral turns and adjacent turns adhered to one another by baking to form a contiguous conical structure;

the cone having a hollow interior for receiving any selected edible filling; and

the spiral windings starting at the widest, upper end of the cone and extending to the apex of the cone, with an overlap edge between adjacent turns facing towards the upper end of the cone.

10. The container as claimed in claim 9, wherein the overlap has a height in the range of ⅓ to ½ of the width of the dough strip.

11. The container as claimed in claim 9, wherein the strip has a thickness in the range from ⅜" to ⅝".

12. The container as claimed in claim 9, wherein the strip has a width in the range from 0.75" to 1.25".

13. The container as claimed in claim 9, wherein the bread dough is made from a high gluten flour.

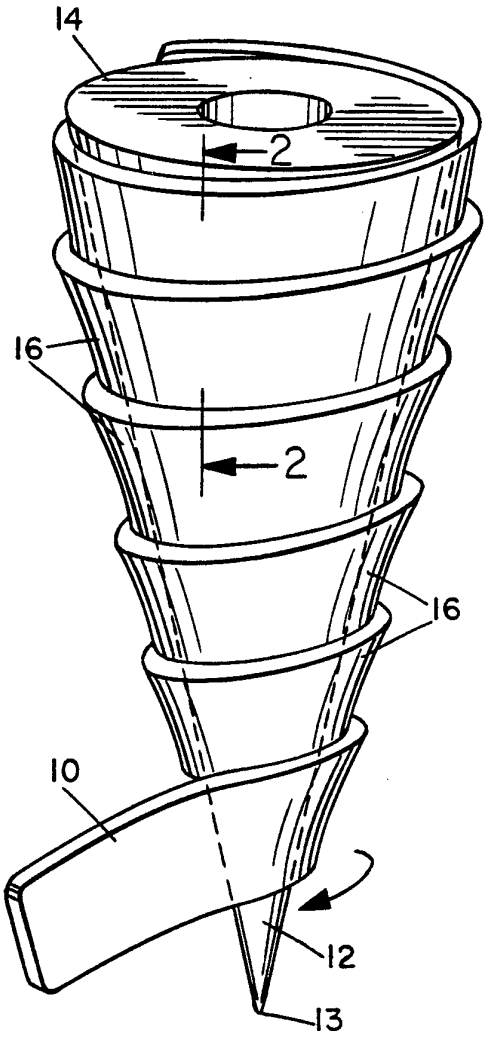

FIG. 1

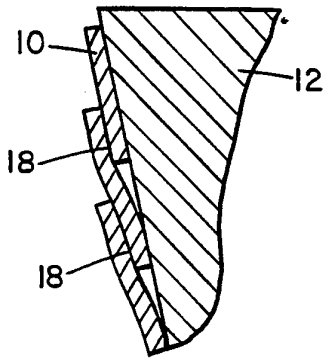

FIG. 2

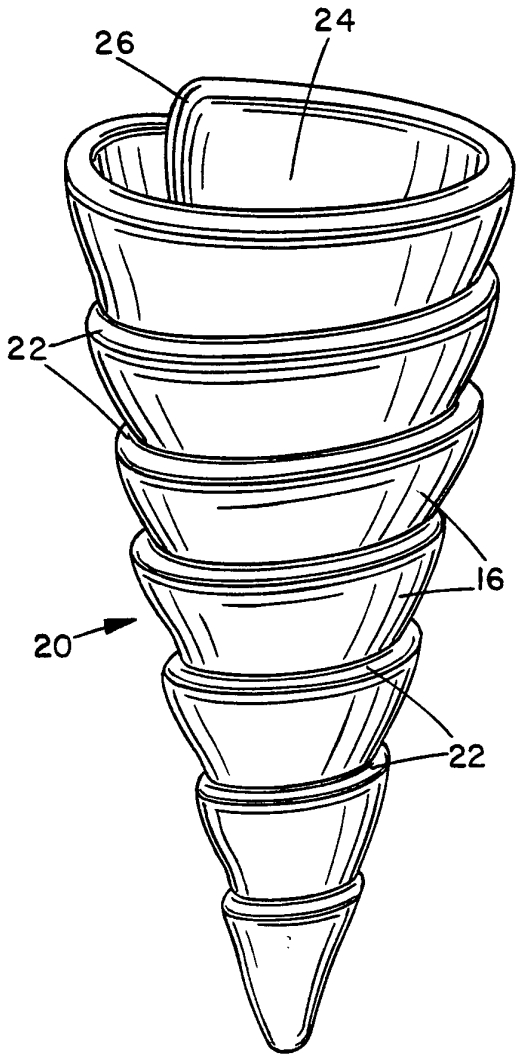

FIG. 3

INTERNATIONAL SEARCH REPORT

Inter al Application No
PCT/US 96/06730

A. CLASSIFICATION OF SUBJECT MATTER
IPC 6 A21C15/02 A21B5/02

According to International Patent Classification (IPC) or to both national classification and IPC

B. FIELDS SEARCHED

Minimum documentation searched (classification system followed by classification symbols)
IPC 6 A21C A21B

Documentation searched other than minimum documentation to the extent that such documents are included in the fields searched

Electronic data base consulted during the international search (name of data base and, where practical, search terms used)

C. DOCUMENTS CONSIDERED TO BE RELEVANT

Category *	Citation of document, with indication, where appropriate, of the relevant passages	Relevant to claim No.
Y	EP,A,0 258 936 (R.J. VAN DER HOORN ET AL) 9 March 1988 see the whole document ---	1-13
Y	US,A,3 867 559 (F. HAAS) 18 February 1975 see figure 1 ---	1-13
A	US,A,4 150 935 (D. VENZO) 24 April 1979 see abstract; figures 2,12 ---	1-13
A	US,A,3 410 691 (M.E. STANLEY) 12 November 1968 cited in the application ---	
A	US,A,4 795 652 (I.A. COOPER) 3 January 1989 cited in the application -----	

☐ Further documents are listed in the continuation of box C.

☒ Patent family members are listed in annex.

* Special categories of cited documents :

"A" document defining the general state of the art which is not considered to be of particular relevance

"E" earlier document but published on or after the international filing date

"L" document which may throw doubts on priority claim(s) or which is cited to establish the publication date of another citation or other special reason (as specified)

"O" document referring to an oral disclosure, use, exhibition or other means

"P" document published prior to the international filing date but later than the priority date claimed

"T" later document published after the international filing date or priority date and not in conflict with the application but cited to understand the principle or theory underlying the invention

"X" document of particular relevance; the claimed invention cannot be considered novel or cannot be considered to involve an inventive step when the document is taken alone

"Y" document of particular relevance; the claimed invention cannot be considered to involve an inventive step when the document is combined with one or more other such documents, such combination being obvious to a person skilled in the art.

"&" document member of the same patent family

Date of the actual completion of the international search	Date of mailing of the international search report
29 August 1996	10. 09. 96

Name and mailing address of the ISA	Authorized officer
European Patent Office, P.B. 5818 Patentlaan 2 NL - 2280 HV Rijswijk Tel. (+31-70) 340-2040, Tx. 31 651 epo nl, Fax (+31-70) 340-3016	Franks, N

Form PCT/ISA/210 (second sheet) (July 1992)

INTERNATIONAL SEARCH REPORT

...information on patent family members

Inter ...al Application No
PCT/US 96/06730

Patent document cited in search report	Publication date	Patent family member(s)	Publication date
EP-A-258936	09-03-88	NL-A- 8602232	05-04-88
		DE-A- 3774511	19-12-91
		US-A- 4801259	31-01-89
US-A-3867559	18-02-75	NONE	
US-A-4150935	24-04-79	NONE	
US-A-3410691	12-11-68	NONE	
US-A-4795652	03-01-89	NONE	