(12) INTERNATIONAL APPLICATION PUBLISHED UNDER THE PATENT COOPERATION TREATY (PCT)

(19) World Intellectual Property Organization
International Bureau

(43) International Publication Date
24 March 2016 (24.03.2016)

WIPO | PCT

(10) International Publication Number
WO 2016/043875 A1

(51) International Patent Classification:
E21B 17/00 (2006.01) *E21B 41/00* (2006.01)
E21B 23/00 (2006.01)

(21) International Application Number:
PCT/US2015/044949

(22) International Filing Date:
13 August 2015 (13.08.2015)

(25) Filing Language: English

(26) Publication Language: English

(30) Priority Data:
14/487,812 16 September 2014 (16.09.2014) US

(71) Applicant: **BAKER HUGHES INCORPORATED** [US/US]; P.O. Box 4740, Houston, Texas 77210-4740 (US).

(72) Inventors: **HARPER, Jason M.**; 2929 Allen Parkway, Suite 2100, Houston, TX 77019-2118 (US). **KING, James G.**; 2929 Allen Parkway, Suite 2100, Houston, TX 77019-2118 (US). **SANCHEZ, James Scott**; 2929 Allen Parkway, Suite 2100, Houston, TX 77019-2118 (US).

(81) Designated States *(unless otherwise indicated, for every kind of national protection available)*: AE, AG, AL, AM, AO, AT, AU, AZ, BA, BB, BG, BH, BN, BR, BW, BY, BZ, CA, CH, CL, CN, CO, CR, CU, CZ, DE, DK, DM, DO, DZ, EC, EE, EG, ES, FI, GB, GD, GE, GH, GM, GT, HN, HR, HU, ID, IL, IN, IR, IS, JP, KE, KG, KN, KP, KR, KZ, LA, LC, LK, LR, LS, LU, LY, MA, MD, ME, MG, MK, MN, MW, MX, MY, MZ, NA, NG, NI, NO, NZ, OM, PA, PE, PG, PH, PL, PT, QA, RO, RS, RU, RW, SA, SC, SD, SE, SG, SK, SL, SM, ST, SV, SY, TH, TJ, TM, TN, TR, TT, TZ, UA, UG, US, UZ, VC, VN, ZA, ZM, ZW.

(84) Designated States *(unless otherwise indicated, for every kind of regional protection available)*: ARIPO (BW, GH, GM, KE, LR, LS, MW, MZ, NA, RW, SD, SL, ST, SZ, TZ, UG, ZM, ZW), Eurasian (AM, AZ, BY, KG, KZ, RU, TJ, TM), European (AL, AT, BE, BG, CH, CY, CZ, DE, DK, EE, ES, FI, FR, GB, GR, HR, HU, IE, IS, IT, LT, LU, LV, MC, MK, MT, NL, NO, PL, PT, RO, RS, SE, SI, SK, SM, TR), OAPI (BF, BJ, CF, CG, CI, CM, GA, GN, GQ, GW, KM, ML, MR, NE, SN, TD, TG).

[Continued on next page]

(54) Title: TUBULAR ASSEMBLY INCLUDING A SLIDING SLEEVE HAVING A DEGRADABLE LOCKING ELEMENT

(57) Abstract: A tubular assembly includes a turbular member having at least one opening, and a sleeve slidingly mounted relative to the tubular member. The sleeve is shiftable between an open configuration in which the at least one opening is exposed and a closed configuration in which the at least one opening is covered by the sleeve. A degradable locking member is mounted relative to one of the turbular and the sleeve. The degradable locking member selectively retains the sleeve in the open configuration. The degradable locking member is configured to degrade when exposed to a downhole fluid allowing the sleeve to be shifted to the closed configuration.

FIG. 1

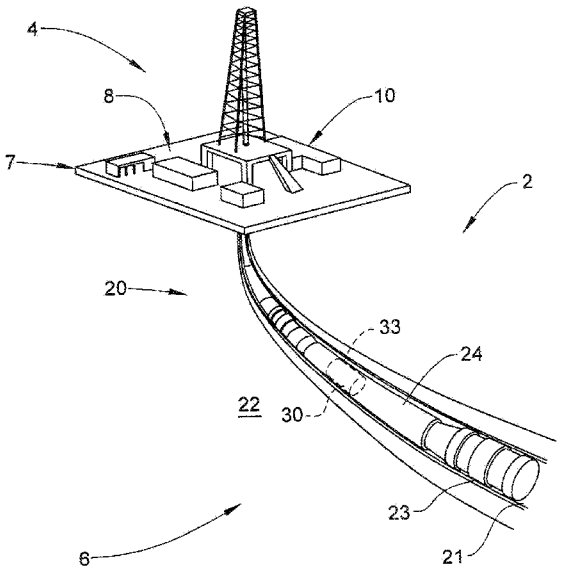

WO 2016/043875 A1

Declarations under Rule 4.17:

— *as to applicant's entitlement to apply for and be granted a patent (Rule 4.17(ii))*

— *as to the applicant's entitlement to claim the priority of the earlier application (Rule 4.17(iii))*

Published:

— *with international search report (Art. 21(3))*

TUBULAR ASSEMBLY INCLUDING A SLIDING SLEEVE HAVING A DEGRADABLE LOCKING ELEMENT

CROSS REFERENCE TO RELATED APPLICATIONS

[0001] This application claims the benefit of U.S. Application No. 14/487812, filed on September 16, 2014, which is incorporated herein by reference in its entirety.

BACKGROUND

[0002] Hydrocarbon drilling and recovery systems employ strings of tubulars that extend downhole. Often times one or more of the tubulars include openings. The openings may be selectively exposed to allow downhole fluids to pass into the string of tubulars. In some cases, a sliding sleeve is deployed to expose the openings. More specifically, the string of tubulars is positioned downhole and, at a desired time, the sliding sleeve is shifted to expose the openings. Once opened, the sleeve may be locked in place by a locking mechanism. The lock allows, for example, coiled tubing to be run downhole through the tubular without inadvertently closing the sleeve. Once locked, the sleeve may not be closed. Accordingly, improvements in sleeve locking and retaining devices are well received by the industry.

SUMMARY

[0003] A tubular assembly includes a turbular member having at least one opening, and a sleeve slidingly mounted relative to the tubular member. The sleeve is shiftable between an open configuration, in which the at least one opening is exposed, and a closed configuration, in which the at least one opening is covered by the sleeve. A degradable locking member is mounted relative to one of the turbular and the sleeve. The degradable locking member selectively retains the sleeve in the open configuration. The degradable locking member is configured to degrade when exposed to a downhole fluid allowing the sleeve to be shifted to the closed configuration.

[0004] A resource extraction system includes an uphole portion having at least a platform, a wellbore formed in a formation, and a tubular assembly extending down the wellbore into the formation. The tubular assembly includes a turbular member including at least one opening and a sleeve slidingly mounted relative to the tubular member. The sleeve is shiftable between an open configuration, in which the at least one opening is exposed, and a closed configuration, in which the at least one opening is covered by the sleeve. A

degradable locking member is mounted relative to one of the turbular and the sleeve. The degradable locking member selectively retains the sleeve in the open configuration. The degradable locking member is configured to degrade when exposed to a downhole fluid allowing the sleeve to be shifted to the closed configuration.

[0005] A method of operating a downhole slidable sleeve includes running a tubular assembly including at least one tubular having one or more openings covered by a slidable sleeve into a wellbore, shifting the slidable sleeve relative to the at least one tubular from a closed configuration to an open configuration exposing the one or more openings to a downhole fluid, locking the slidable sleeve in the open configuration with a degradable locking member, and exposing the degradable locking member to a downhole fluid causing the degradable locking member to degrade.

BRIEF DESCRIPTION OF THE DRAWINGS

[0006] Referring now to the drawings wherein like elements are numbered alike in the several Figures:

[0007] FIG. 1 depicts a resource extraction system including a tubular assembly having a slidable sleeve with a degradable locking member, in accordance with an aspect of an exemplary embodiment;

[0008] FIG. 2 depicts the tubular assembly of FIG. 1 with the slidable sleeve in a closed configuration;

[0009] FIG. 3 depicts the tubular assembly with the slidable sleeve locked in an open configuration through the degradable locking member of FIG. 1;

[0010] FIG. 4 depicts a degradable locking member, in accordance with an aspect of an exemplary embodiment;

[0011] FIG. 5 depicts a degradable locking member, in accordance with another aspect of an exemplary embodiment; and

[0012] FIG. 6 depicts a degradable locking member, in accordance with yet another aspect of an exemplary embodiment.

DETAILED DESCRIPTION

[0013] A resource extraction system, in accordance with an exemplary embodiment, is indicated generally at 2, in FIG. 1. Resource extraction system 2 includes an uphole system 4 operatively connected to a downhole system 6. Uphole system 4 may include a platform 7 that supports pumps 8 that aid in completion and/or extraction processes as well as

fluid storage 10. Fluid storage 10 may contain a completion fluid that is introduced into downhole system 6. Downhole system 6 may include a downhole string of tubulars 20 that is extended into a wellbore 21 formed in formation 22. A well casing 23 extends down wellbore 21 to provide stability. Downhole string of tubulars 20 may include a tubular 24 and a slidable sleeve 30. Slidable sleeve 30 may be selectively shifted from a closed configuration (FIG. 2) to an open configuration (FIG. 3) exposing a plurality of openings 33 formed in turbular 24. Openings 33 allow fluid to pass from wellbore 21 into an interior portion 35 of tubular string 20 and vice versa. In the exemplary embodiment shown, slidable sleeve 30 is arranged radially inwardly of tubular 24. However, it should be understood that the relative position of slidable sleeve 30 and tubular 24 may vary.

[0014] In accordance with an aspect of an exemplary embodiment, a degradable locking member 40 retains slidable sleeve 30 in the open configuration. In the exemplary embodiment shown, locking member 40 is positioned radially outwardly of an outer surface (not separately labeled) of slidable sleeve 30. When in the open configuration, degradable locking member 40 nests within an annular groove 44 formed in the outer surface of slidable sleeve 30. When nested within annular groove 44, slidable sleeve 30 is prevented from shifting from the open configuration. In this manner, operators may introduce components, such as various tools, coiled tubing and the like, into downhole tubular string 20 without inadvertently shifting slidable sleeve 30 to the closed configuration. In previous systems, slidable sleeve 30 was forever prevented from being closed. In accordance with the exemplary embodiment, degradable locking member 40 will, over time, mechanically and/or chemically degrade. When degraded to a particular degree, slidable sleeve 30 may be shifted against degradable locking member 40. Further shifting will cause degradable locking member 40 to release. At such time, slidable sleeve 30 may be freely shifted from the open configuration to the closed configuration.

[0015] In accordance with one aspect of an exemplary embodiment, degradable locking member 40 may take the form of a degradable snap ring 50, illustrated in FIG. 4. Degradable snap ring 50 extends from a first end 52 to a second end 54 through a degradable intermediate portion 56. First end 52 may be spaced from second end 54 defining a discontinuity 58. In accordance with another aspect of an exemplary embodiment, locking member 40 may take the form of a body lock ring 68, illustrated in FIG. 5. Body lock ring 68 may include a plurality of teeth 69 that meshingly engage with another plurality of teeth 71 formed on an outer surface (not separately labeled) of a slidable sleeve 74. In accordance with yet another aspect of an exemplary embodiment, degradable locking member 40 may

take the form of a collet 80 arranged radially outwardly of tubular 24. Collet 80 includes a degradable locking portion 82 that, once degraded, allows slidable sleeve 30 to return to a closed configuration.

[0016] At this point, it should be understood that degradable locking member 40 may be formed in whole, or in part, from a material that disintegrates when exposed to downhole fluids. As will be discussed more fully below, degradable locking member 40 may be provided with a coating that may delay disintegration of degradable locking member 40 for a period of time. As will be discussed more fully below, coatings and underlying body materials may take on a variety of forms.

[0017] In accordance with an aspect of an exemplary embodiment, degradable locking member 40 may be formed from materials that are degradable by exposure to a variety of fluids capable of being pumped, present, or delivered downhole such as water, acid, oil, etc. The degradable material could be a metal, a composite, a polymer, etc., or any other material that is suitably degradable and that can withstand the loads during run-in, etc. In one embodiment, the degradable locking member 40 may be manufactured from a high strength controlled electrolytic metallic material and is degradable by brine, acid, or aqueous fluid.

[0018] That is, materials appropriate for the purpose of degradable locking member 40 described herein are lightweight, high-strength metallic materials. Examples of suitable materials, e.g., high strength controlled electrolytic metallic materials, and their methods of manufacture are given in United States Patent Publication No. 2011/0135953 (Xu, et al.), which Patent Publication is hereby incorporated by reference in its entirety. These lightweight, high-strength, selectably and controllably degradable materials include fully-dense, sintered powder compacts formed from coated powder materials that include various lightweight particle cores and core materials having various single layer and multilayer nanoscale coatings. These powder compacts are made from coated metallic powders that include various electrochemically-active (e.g., having relatively higher standard oxidation potentials) lightweight, high-strength particle cores and core materials, such as electrochemically active metals, that are dispersed within a cellular nanomatrix formed from the various nanoscale metallic coating layers of metallic coating materials, and are particularly useful in borehole applications.

[0019] Suitable core materials include electrochemically active metals having a standard oxidation potential greater than or equal to that of Zn, including Mg, Al, Mn or Zn or alloys or combinations thereof. For example, tertiary Mg-Al-X alloys may include, by

weight, up to about 85% Mg, up to about 15% Al and up to about 5% X, where X is another material. The core material may also include a rare earth element such as Sc, Y, La, Ce, Pr, Nd or Er, or a combination of rare earth elements. In other embodiments, the materials could include other metals having a standard oxidation potential less than that of Zn. Also, suitable non-metallic materials include ceramics, glasses (e.g., hollow glass microspheres), carbon, or a combination thereof. In one embodiment, the material has a substantially uniform average thickness between dispersed particles of about 50nm to about 5000nm. In one embodiment, the coating layers may be formed from Al, Ni, W or Al_2O_3, or combinations thereof. In one embodiment, the coating may be a multi-layer coating, for example, comprising a first Al layer, a Al_2O_3 layer, and a second Al layer. In some embodiments, the coating may have a thickness of about 25nm to about 2500nm.

[0020] These powder compacts provide a unique and advantageous combination of mechanical strength properties, such as compression and shear strength, low density and selectable and controllable corrosion properties, particularly rapid and controlled dissolution in various borehole fluids. The fluids may include any number of ionic fluids or highly polar fluids, such as those that contain various chlorides. Examples include fluids comprising potassium chloride (KCl), hydrochloric acid (HCl), calcium chloride ($CaCl_2$), calcium bromide ($CaBr_2$) or zinc bromide ($ZnBr_2$). For example, the particle core and coating layers of these powders may be selected to provide sintered powder compacts suitable for use as high strength engineered materials having a compressive strength and shear strength comparable to various other engineered materials, including carbon, stainless and alloy steels, but which also have a low density comparable to various polymers, elastomers, low-density porous ceramics and composite materials.

[0021] While one or more embodiments have been shown and described, modifications and substitutions may be made thereto without departing from the spirit and scope of the invention. Accordingly, it is to be understood that the present invention has been described by way of illustrations and not limitation.

CLAIMS:

1. A tubular assembly comprising:

a turbular member including at least one opening (23);

a sleeve (30) slidingly mounted relative to the tubular member, the sleeve (30) being shiftable between an open configuration, in which the at least one opening (23) is exposed, and a closed configuration, in which the at least one opening (23) is covered by the sleeve (30); and

a degradable locking member (40) mounted relative to one of the turbular (24) and the sleeve (30), the degradable locking member (40) selectively retaining the sleeve (30) in the open configuration, the degradable locking member (40) being configured to degrade when exposed to a downhole fluid allowing the sleeve (30) to be shifted to the closed configuration.

2. The tubular assembly according to claim 1, wherein the degradable locking member (40) comprises a degradable snap ring (50).

3. The tubular assembly according to claim 2, wherein the degradable snap ring (50) extends from a first end (52) to a second end (54) through a degradable intermediate portion (56), the first end (52) being spaced from the second end (54) defining a discontinuity (58) in the degradable snap ring (50).

4. The tubular assembly according to claim 1, wherein the degradable locking member (40) comprises a body lock ring (68).

5. The tubular assembly according to claim 4, wherein the body lock ring (68) includes a plurality of teeth (69) configured and disposed to engage with another plurality of teeth (71) formed on the slidable sleeve (30).

6. The tubular assembly according to claim 1, further comprising: a collet (80) mounted relative to the tubular (24), wherein the degradable locking member (40) forms a portion of the collet (80).

7. The tubular assembly according to claim 1, wherein the slidable sleeve (30) is arranged radially inwardly of the tubular (24).

8. A resource extraction system (2) comprising:

an uphole portion (4) including at least a platform (7);

a wellbore (21) formed in a formation (22); and

a tubular assembly extending down the wellbore (21) into the formation (22), the tubular assembly comprising:

a turbular member including at least one opening (23);

a sleeve (30) slidingly mounted relative to the tubular member, the sleeve (30) being shiftable between an open configuration, in which the at least one opening (23) is exposed, and a closed configuration, in which the at least one opening (23) is covered by the sleeve (30); and

a degradable locking member (40) mounted relative to one of the turbular (24) and the sleeve (30), the degradable locking member (40) selectively retaining the sleeve (30) in the open configuration, the degradable locking member (40) being configured to degrade when exposed to a downhole fluid allowing the sleeve (30) to be shifted to the closed configuration.

9. The resource extraction system (2) according to claim 8, wherein the degradable locking member (40) comprises a degradable snap ring (50).

10. The resource extraction system (2) according to claim 9, wherein the degradable snap ring (50) extends from a first end (52) to a second end (54) through a degradable intermediate portion (56), the first end (52) being spaced from the second end (54) defining a discontinuity (58) in the degradable snap ring (50).

11. The resource extraction system (2) according to claim 8, wherein the degradable locking member (40) comprises a body lock ring (68).

12. The resource extraction system (2) according to claim 11, wherein the body lock ring (68) includes a plurality of teeth (69) configured and disposed to engage with another plurality of teeth (71) formed on the slidable sleeve (30).

13. The resource extraction system (2) according to claim 8, further comprising: a collet (80) mounted relative to the tubular (24), wherein the degradable locking member (40) forms a portion of the collet (80).

14. The resource extraction system (2) according to claim 8, wherein the slidable sleeve (30) is arranged radially inwardly of the tubular (24).

FIG. 1

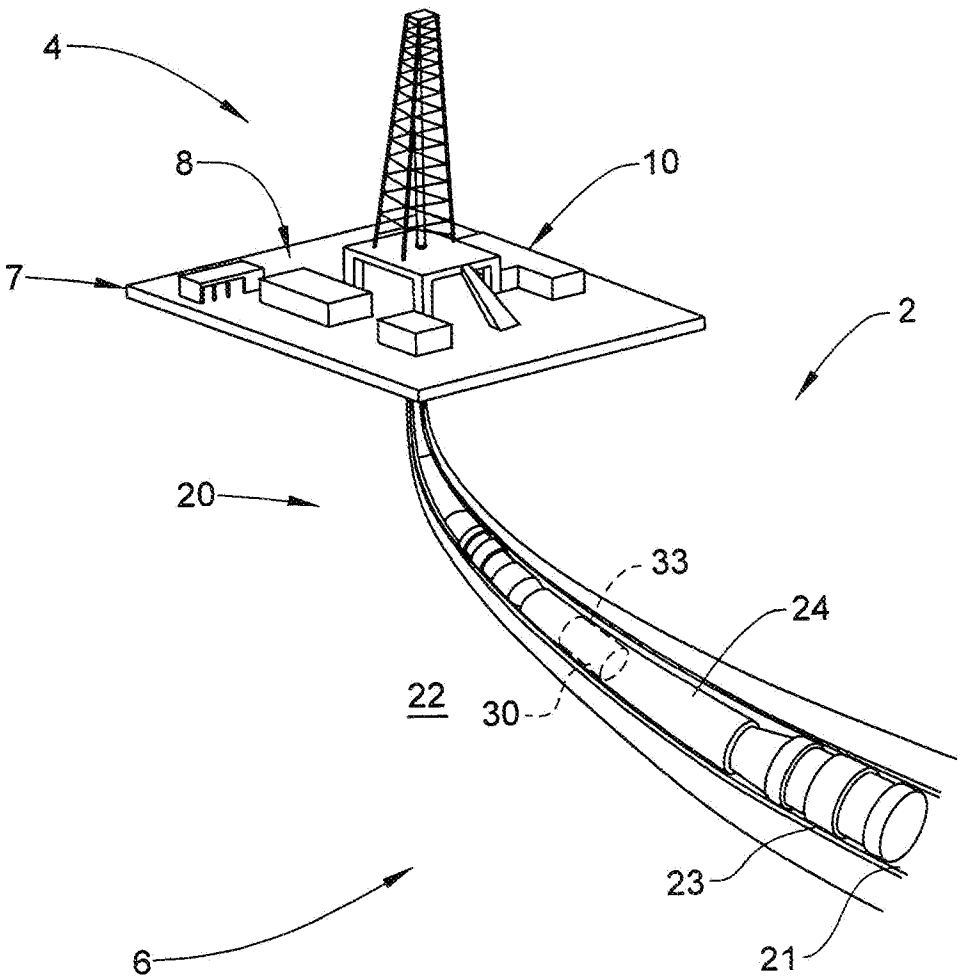

FIG. 2

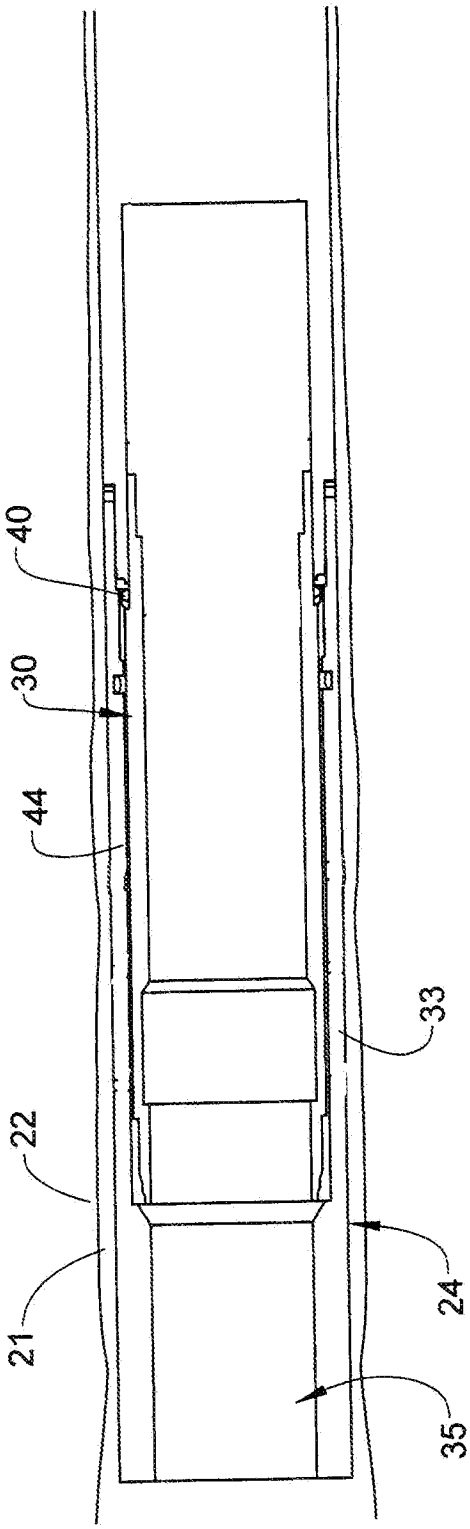

FIG. 3

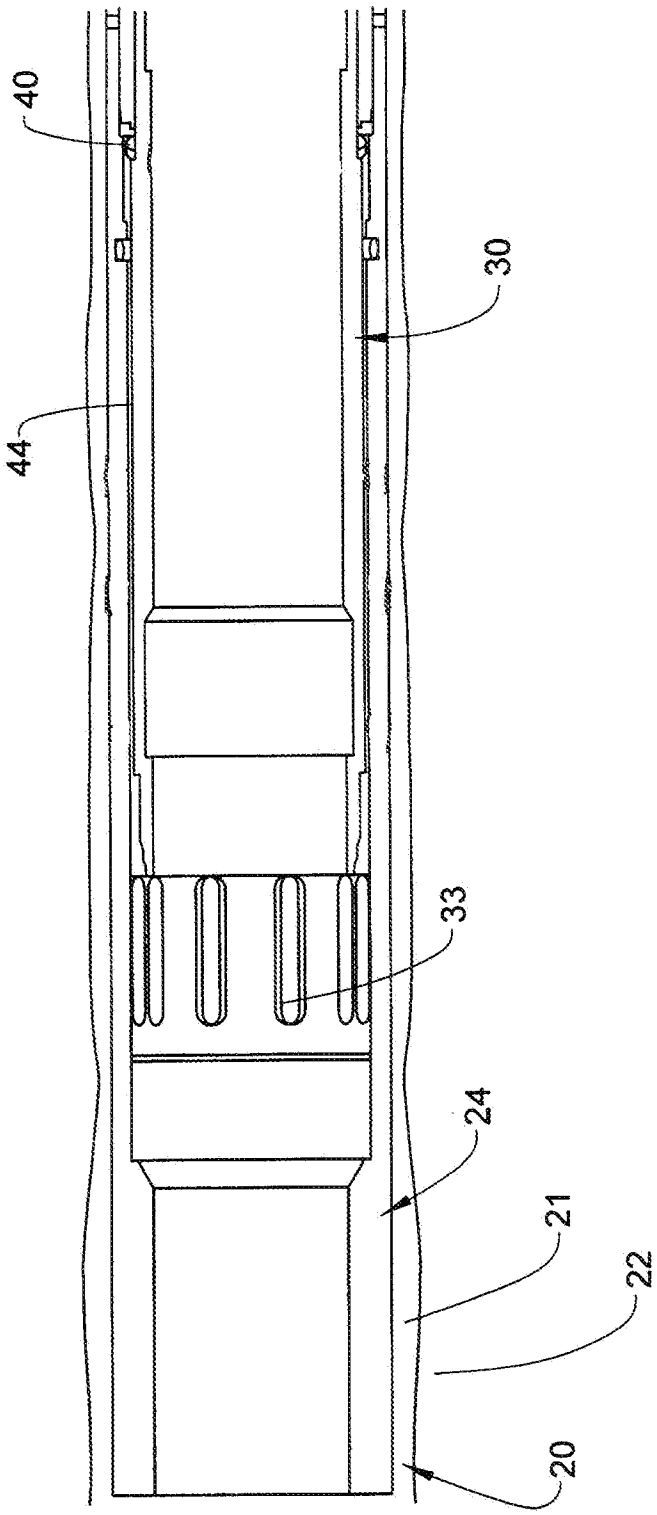

FIG. 4

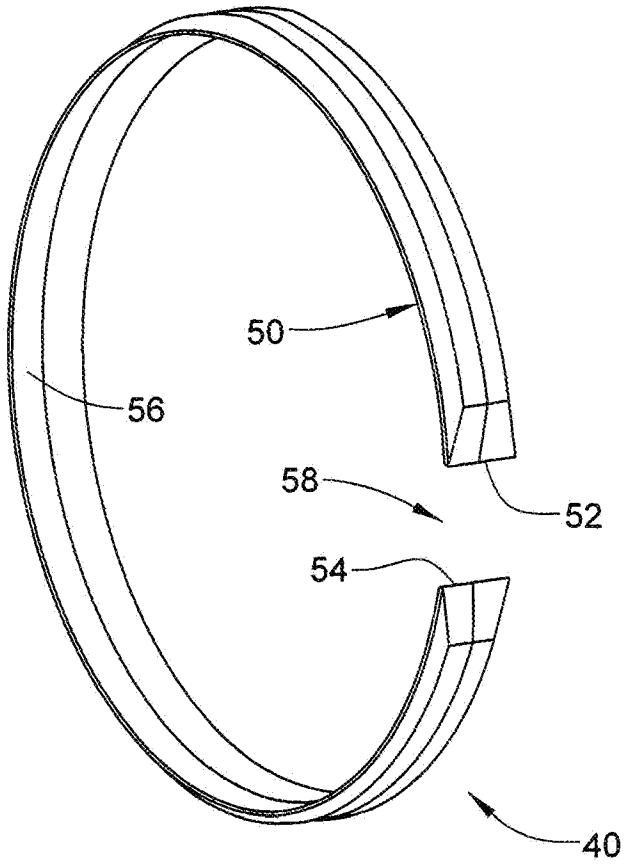

FIG. 5

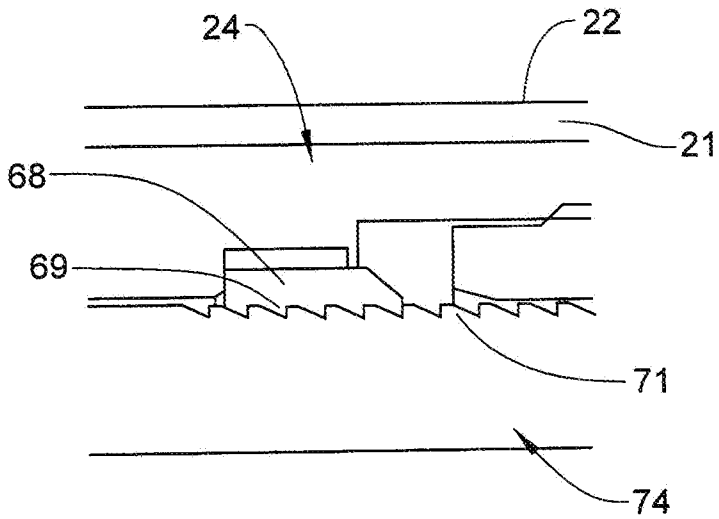

FIG. 6

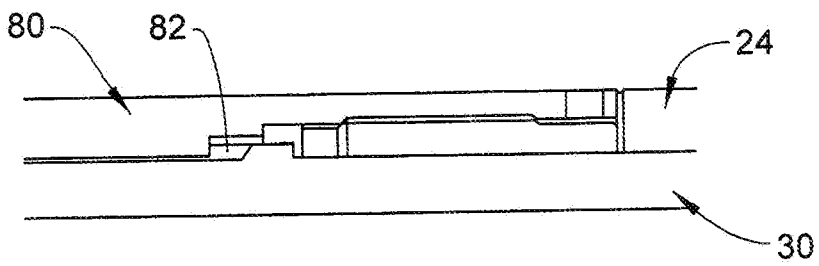

INTERNATIONAL SEARCH REPORT

International application No.
PCT/US2015/044949

A. CLASSIFICATION OF SUBJECT MATTER

E21B 17/00(2006.01)i, E21B 23/00(2006.01)i, E21B 41/00(2006.01)i

According to International Patent Classification (IPC) or to both national classification and IPC

B. FIELDS SEARCHED

Minimum documentation searched (classification system followed by classification symbols)
E21B 17/00; E21B 23/04; E21B 34/06; E21B 34/00; E21B 34/14; E21B 34/10; E21B 23/00; E21B 41/00

Documentation searched other than minimum documentation to the extent that such documents are included in the fields searched
Korean utility models and applications for utility models
Japanese utility models and applications for utility models

Electronic data base consulted during the international search (name of data base and, where practicable, search terms used)
eKOMPASS(KIPO internal) & Keywords: tubular, opening, sleeve, lock, open, close, snap-ring, collet and wellbore

C. DOCUMENTS CONSIDERED TO BE RELEVANT

Category*	Citation of document, with indication, where appropriate, of the relevant passages	Relevant to claim No.
X	US 2012-0111574 A1 (DESRANLEAU, CHRISTOPHER DENIS et al.) 10 May 2012 See paragraphs [0024]-[0047], claims 1-2, and figures 1A-1B.	1-3,6-10,13-14
Y		4-5,11-12
Y	US 4828037 A (LINDSEY, HIRAM E. et al.) 09 May 1989 See column 6, lines 42-51 and figure 1.	4-5,11-12
A	US 2014-0246208 A1 (PACKERS PLUS ENERGY SERVICES INC.) 04 September 2014 See paragraphs [0006]-[0012] and claim 1.	1-14
A	US 2003-0019630 A1 (FREIHEIT, ROLAND R. et al.) 30 January 2003 See paragraphs [0007]-[0009] and claim 1.	1-14
A	US 2011-0253383 A1 (PORTER, JESSE CALE et al.) 20 October 2011 See paragraphs [0006]-[0008] and claim 1.	1-14

☐ Further documents are listed in the continuation of Box C.

☒ See patent family annex.

* Special categories of cited documents:
"A" document defining the general state of the art which is not considered to be of particular relevance
"E" earlier application or patent but published on or after the international filing date
"L" document which may throw doubts on priority claim(s) or which is cited to establish the publication date of another citation or other special reason (as specified)
"O" document referring to an oral disclosure, use, exhibition or other means
"P" document published prior to the international filing date but later than the priority date claimed
"T" later document published after the international filing date or priority date and not in conflict with the application but cited to understand the principle or theory underlying the invention
"X" document of particular relevance; the claimed invention cannot be considered novel or cannot be considered to involve an inventive step when the document is taken alone
"Y" document of particular relevance; the claimed invention cannot be considered to involve an inventive step when the document is combined with one or more other such documents,such combination being obvious to a person skilled in the art
"&" document member of the same patent family

Date of the actual completion of the international search	Date of mailing of the international search report
22 October 2015 (22.10.2015)	**23 October 2015 (23.10.2015)**

Name and mailing address of the ISA/KR
International Application Division
Korean Intellectual Property Office
189 Cheongsa-ro, Seo-gu, Daejeon Metropolitan City, 35208,
Republic of Korea
Facsimile No. +82-42-472-7140

Authorized officer
KIM, Jin Ho
Telephone No. +82-42-481-8699

INTERNATIONAL SEARCH REPORT

Information on patent family members

International application No.
PCT/US2015/044949

Patent document cited in search report	Publication date	Patent family member(s)	Publication date
US 2012-0111574 A1	10/05/2012	CA 2810423 A1	29/03/2012
		EP 2619403 A1	31/07/2013
		US 8931565 B2	13/01/2015
		WO 2012-037646 A1	29/03/2012
US 4828037 A	09/05/1989	None	
US 2014-0246208 A1	04/09/2014	US 2011-100643 A1	05/05/2011
		US 8757273 B2	24/06/2014
US 2003-0019630 A1	30/01/2003	AU 2001-60498 A1	17/12/2001
		EP 1287225 A2	05/03/2003
		US 6513595 B1	04/02/2003
		WO 01-94743 A2	13/12/2001
		WO 01-94743 A3	16/05/2002
US 2011-0253383 A1	20/10/2011	AU 2012-264470 A1	19/12/2013
		CA 2836860 A1	06/12/2012
		CN 103562490 A	05/02/2014
		EP 2715052 A1	09/04/2014
		MX 2013014090 A	05/12/2014
		US 8668016 B2	11/03/2014
		WO 2012-164236 A1	06/12/2012