(19) Europäisches Patentamt
European Patent Office
Office européen des brevets

(11) Publication number: **0 313 656**
A1

(12) # EUROPEAN PATENT APPLICATION

published in accordance with Art. 158(3) EPC

(21) Application number: **87904321.4**

(22) Date of filing: **03.07.87**

Data of the international application taken as a basis:

(86) International application number:
PCT/JP87/00469

(87) International publication number:
WO88/00382 (14.01.88 88/02)

(51) Int. Cl.[3]: **G 09 F 9/30**
H 05 B 33/22

(30) Priority: **03.07.86 JP 156896/86**

(43) Date of publication of application:
03.05.89 Bulletin 89/18

(84) Designated Contracting States:
DE FR GB IT NL

(71) Applicant: **KABUSHIKI KAISHA KOMATSU SEISAKUSHO**
3-6, Akasaka 2-chome
Minato-ku Tokyo 107(JP)

(72) Inventor: **NIRE, Takashi**
3-18-11, Nakahara
Hiratsuka-shi Kanagawa-ken 254(JP)

(72) Inventor: **WATANABE, Takehito**
920, Itado
Isehara-shi Kanagawa-ken 259-11(JP)

(72) Inventor: **TANDA, Satoshi**
8-2, Kokufuhongo Ooiso-cho
Naka-gun Kanagawa-ken 259-01(JP)

(74) Representative: **Newstead, Michael John et al,**
Page & Co. Temple Gate House Temple Gate
Bristol BS1 6PL(GB)

(54) **COLOR DISPLAY DEVICE.**

(57) A plurality of cells each consisting of a thin film EL element formed in such a manner as to emit color light are arranged to constitute and EL element portion (1) and filters (2) having predetermined colors each corresponding to each cell are formed on the surface of the former so that each cell is caused to emit the light to be output through the color filter in accordance with image information and color display can thus be effected. Accordingly, it is possible to obtain a remarkably thin color display device having excellent contrast and high vision dependence of brightness. In accordance with the thin film EL element of the present invention, zinc sulfide containing nitrogen is used as a light emitting layer so that transition light emission occurs between a plurality of levels, rays of light having various wavelengths are emitted and white light containing the three primary colors can be obtained.

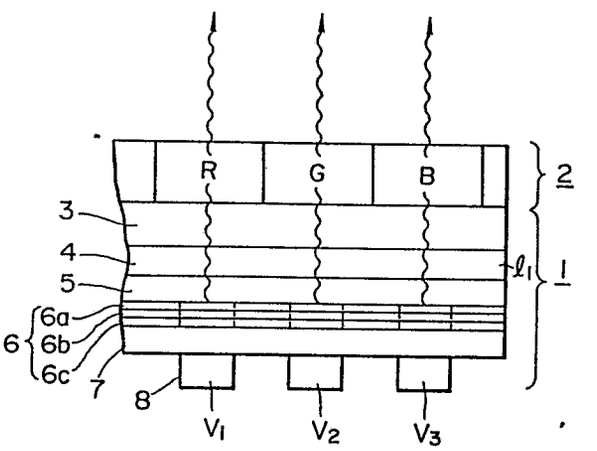

FIG.1 (a)

EP 0 313 656 A1

SPECIFICATION

COLOR DISPLAY APPARATUS

TECHNICAL FIELD

The present invention relates to color display apparatus and, more particularly, to color display apparatus which include an EL panel and a color filter assembled integrally.

BACKGROUND TECHNIQUES

In a field of color display apparatus, there is an increasing tendency for small thin low-power consuming ones to be demanded, and pocket-size television sets using liquid crystal as a shutter have come as goods to public notice.

As shown in Fig. 18, a thin full-color display apparatus used in a conventional pocket-size television set includes shutter means 100 in the form of a matrix of liquid crystal cells C, a light source 101 disposed behind the shutter means, and filter means 102 disposed before the shutter means and including a repeat of a red transparent filter R, a green transparent filter G and blue transparent filter B arranged in order in correspondence to the liquid crystal cells. By controlling voltages applied to the respective liquid crystal cells in accordance with image information, quantities of light from the light source and passing through the liquid crystal cells are adjusted to thereby adjust the luminance and chromaticity of the respective pixels.

However, in such thin full-color display apparatus, there is the problem that contrast is not excellent due to the characteristic of the liquid crystal itself and that the angle of visual field is very narrow. In such apparatus, a light source as backlight is needed, so that there is the problem that the entire apparatus would be thick although the liquid crystal section itself

is thin.

The thin-film EL elements each include a thin transparent luminous layer and has no granularity. Therefore, external incident light and light emitted within the luminous layer are not scattered, so that they cause no halation or oozing, the display is clear and provides high contrast. Therefore, they are highlighted as being used for a display or illumination unit.

The basic structure of a thin-film EL element includes a double dielectric structure which in turn includes on a transparent substrate a transparent electrode of tin oxide (SnO_2) layer, etc., a first dielectric layer of tantalum pentaoxide layer, etc., a thin luminous layer of zinc sulfide (ZnS), etc., and containing manganese (Mn), etc., a second dielectric layer of tantalum pentaoxide, etc., and a rear electrode of an aluminum (Al) layer, etc., laminated in order.

The process of luminescence is as follows. If a voltage is applied across the transparent electrode and rear electrode, the electrons trapped at the interface level are pulled out and accelerated by an electric field induced within the luminous layer so that they have energy enough to strike orbital electrons in Mn (the luminescent center) to thereby excite same.

When the excited luminescent center returns to its ground state, it emits light.

Researches in which a multicolor display panel is fabricated using thin-film EL elements have recently become popular and various researches have been made on making full color panels.

A thin-film EL element emitting white light uses a luminous layer of zinc sulfide containing praseodymium fluoride (PrF_3), as disclosed in Yoshihiro Hamakawa et al., The Institute of Electronics and Communication Engineers

of Japan Technical Research Report, CPM 82-10, 1982.

As shown in Fig. 19, the thin-film EL element using the luminous layer of zinc sulfide containing praseodymium fluoride has peaks at about 500 and 650 nm in the emission spectrum. The rays of light at 500 and 650 nm are in complementary-color relationship to each other and show as if they were white light. However, the light does not contain three primary colors, so that it cannot be used for full color display.

A thin-film EL element having such structure is all transparent except for its rear electrode. Thus external incident light is reflected by the rear electrode and the reflection interferes with the light from the luminous layer so that it does not provide a satisfactory contrast ratio and thus only display devices having low display quality would be provided.

The present invention has been made in view of such situations. It is an object of the present invention to provide a thin color display apparatus which provides high contrast and a wide angle of visual field.

It is another object of the present invention to give high dielectric strength to the thin-film EL elements of a color display apparatus.

It is a further object of the present invention to improve the contrast of the thin-film EL elements.

BRIEF DESCRIPTION OF THE DRAWINGS

Figs. 1(a) and (b) are a cross section view and a plan view, respectively, of a color display apparatus as an example of the present invention; Figs. 2(a) and (b) illustrate the principle of luminescence at the luminous layer of the apparatus and a spectrum obtained from the luminous layer, respectively; Fig. 3 is a diagram showing a contrast ratio in the apparatus; Fig. 4 is a diagram

showing the comparison in angle of visual field between the inventive apparatus and a conventional apparatus; Fig. 5 illustrates the emission spectrum of light from a luminous layer of another example of the present invention; Fig. 6 illustrates the structure of a thin-film EL element as a second example of the present invention; Fig. 7 is a diagram showing the emission spectrum on the thin-film EL element of the second example; Fig. 8 illustrates a thin-film EL element as a third example of the present invention; Fig. 9 illustrates the transmittance of the second dielectric layer used in the EL element of Fig. 8; Fig. 10 is a diagram showing the comparison in contrast ratio between the thin-film EL elements of the third example of the present invention and using a conventional insulating film; Fig. 11 illustrates a thin- film EL element having another structure using the insulating film used in the EL element of the third example (a modification of the third example); Fig. 12 is a diagram showing the relationship between the partial pressure of oxygen and transmittance in the formation of an insulating layer of this example; Fig. 13 illustrates a thin-film EL element as a fourth example of the present invention; Figs. 14(a) and (b) illustrate curves showing the relationship between oxygen quantity and transmittance and the relationship between oxygen quantity and resistivity in the formation of a tantalum oxide film; Fig. 15 is a diagram showing the comparison in voltage-luminance characteristic between the thin-film EL elements of a fourth example of the present invention and the conventional one; Fig. 16 illustrates a modification of the fourth example; Fig. 17 shows curves on control of the luminance for the environmental illumination (axis of abscissas) to maintain within a predetermined range the contrast of the thin-film EL element shown in Fig. 16; Fig. 18 shows a conventional color display apparatus; and Fig. 19 illustrates the emission spectrum of a conventional thin-film EL element which emits white light.

DISCLOSURE OF THE INVENTION

According to the present invention, a color display apparatus includes an EL panel which in turn includes an array of thin-film EL elements which emit white light, and a color filter.

For example, the apparatus includes a matrix of cells, each including an EL element, disposed on a glass baseplate and a color filter unit arranged on the side of luminous faces of the EL elements, the color filter unit including a repeat of a red, a green and a blue transparent filters disposed in order, each filter corresponding to a respective cell. By control of a voltage applied to each cell in accordance with image information, light having a desired luminance and chromaticity is emitted through the corresponidng filter.

Since in this apparatus the EL elements which emit, for example, white light containing three primary colors are used as a light source and light quantity adjusting means without using any liquid crystal, contrast and the angle of visual field are increased. Furthermore, no backlight is needed and thus the apparatus can be thinned.

In the color display apparatus according to the present invention, zinc sulfide containing nitrogen is used for the luminous layers of the thin-film EL elements.

In the inventive method, the luminous layer is formed by forming a thin-film of zinc sulfide and implanting nitrogen ions in the thin-film.

By causing zinc sulfide to contain nitrogen, the electron orbit energy level in nitrogen atoms and molecules are produced in the zinc sulfide and a plurality of defective levels are generated in the zinc sulfide.

By applying an electric field across such

luminous layer, electrons at the levels mentioned above are excited by striking, and transitional luminescence occurs among the levels, so that white light containing three primary colors which emit rays of light having various wavelengths is obtained.

In the present invention, the second dielectric layer of the thin-film EL elements is continuously changed from a black tantalum oxide film to a transparent tantalum oxide film.

For example, when the second dielectric layer is formed in a reactive chamber by sputtering, using as a target tantalum pentaoxide (Ta_2O_5) and feeding a mixed gas of argon (Ar) + oxygen (O_2), it is gradually changed from a black tantalum oxide (TaO_x where $x < 2.5$) film to a transparent tantalum oxide (Ta_2O_5) film by gradually increasing the partial pressure of oxygen.

Since the stoichiometric ratio changes continuously, no dielectric breakedown occurs at the interface, and no reduction of contrast due to reflection at the interface occurs, so that thin-film EL elements are provided having high contrast and high dielectric strength.

The second dielectric layer of each thin-film EL element may be constituted by a single black layer of insulating oxide or nitride in which a proportion in composition of oxygen or nitrogen is reduced stoichiometrically.

It is considered that a stoichiometric reduction of the proportion in composition of oxygen or nitrogen will result in defects at portions lacking oxygen or nitrogen, so that light is absorbed by this defective level and hence that the dielectric layer will become black.

For example, tantalum pentaoxide (Ta_2O_5) is for a transparent insulating film. If the partial pressure of oxygen is reduced and the proportion in composition of oxygen is reduced in the formation of this film, the

tantalum pentaoxide changes to TaO_x where $x < 2.5$ and a black insulating film results. In this way, contrast is improved.

BEST MODE FOR CARRYING OUT THE INVENTION

Examples of the present invention will now be described in detail with reference to the drawings.

Example 1:

Fig. 1(a) and (b) show a thin color display apparatus as an example of the present invention. (Fig. 1(a) is a cross section view taken along the line A-A of Fig. 1(b).)

The apparatus includes an EL element section 1 which in turn includes a multiplicity of thin-film EL elements or cells C arranged in a matrix and corresponding to pixels, and a color filter section 2 disposed integrally on the surface of the EL element section such that the rays of light from the respective cells are output through the color filter section.

The EL element section 1 includes on a glass substrate 3, a transparent electrode 4 of indium tin oxide (ITO) disposed so as to form a like number of first stripe lines $\ell_1,\ldots,\ell_n$ at predetermined intervals, a first dielectric layer 5 of tantalum pentaoxide (Ta_2O_5), a luminous layer 6 having a three-layered structure of a 0.5 um-thick blue luminous layer 6a of zinc sulfide (ZnS) containing 0.1 % of thulium (Tm) and 0.1 % of fluorine (F), a 0.2 um-thick green luminous layer 6b of zinc sulfide containing about 1 % of erbium (Er) and about 1 % of fluorine, and an about 0.2 um-thick red luminous layer 6c of zinc sulfide containing about 1 % of samarium (Sm) and about 1 % of fluorine, a second dielectric layer 7 of tantalum pentaoxide, and a rear electrode 8 of an aluminum (Al) layer including a plurality of second stripe lines

$V_1, \ldots, V_n$ disposed orthogonal to the first stripe lines $\ell_1, \ldots, \ell_n$ such that by applying a voltage corresponding to image information across any particular one of the stripe lines of the transparent electrode 4 and any particular one of the stripe lines of the rear electrode 8, the luminous layer portion located at the intersection of those particular stripe lines is caused to emit light. The principle of luminescence is as shown in Fig. 2(a) and thus rays of light having respective wavelengths are emitted. Fig. 2(b) shows the emission spectrum of the rays of light emitted from this luminous layer. One of the intersections constitutes a cell here.

The color filter section 2 is disposed on the glass baseplate side of the EL element section and includes a repeat of a red transparent filter R, a green transparent filter G and a blue transparent filter B arranged in order, each filter including a dyeable polymer layer and corresponding to a respective cell C, as shown in plan view in Fig. (b).

The contrast characteristic of this color display apparatus is shown in Fig. 3. As will be clear from Fig. 3, the contrast ratio is about 1 : 100 for less than 1000 lx, so that the characteristic is extremely satisfactory and greatly improved compared to the conventional one with a ratio of 1 : 10.

Fig. 4 shows a visual angle-dependent luminace characteristic. The color display apparatus according to the present invention is shown by the solid line, which exhibits that the luminance does not lower up to more than 60 degrees. It is understood that the inventive apparatus is of high visual angle compared to the conventional apparatus shown by the broken lines.

This display apparatus does not need backlight and is very thin, i.e., at most about 1 mm thick, even inclusive of the glass baseplate.

While in the particular example the respective cells are formed integrally, the luminous layer as well as the respective layers may be provided separately for each cell. This applies to the elelctrodes.

The luminous layer must not have a three-layered structure. For example, if the luminous layer is made of zinc sulfide containing nitrogen (N); strontium sulfide (SrS) containing cerium (Ce), europium (Eu) and potassium (K); CaSrS containing cerium (Ce), europium (Eu) and potassium (K); BaSe; ZnS; ZnCdS; ZnF_2; $SrTiO_3$; or $BaTiO_3$, a single such layer can emit white light. Fig. 5 shows the emission spectrum of SrS containing Ce, Eu and K. The contents of impurities which are the luminescent center of each luminous layer in the example 1 are not limited to 1 % and may be changed as needed within a range of 0.1 - 5 %. The kind of impurities used may be changed as needed.

For the color filter section, a dyeable polymer layer directly coated on the glass baseplate may be used as in the particular example. Alternatively, color filters formed separately may be attached, namely, a different color filter structure may be used as needed.

A protective film or the like may be provided as needed.

Example 2:

Another example of the thin-film EL elements used in the color display apparatus will be now described.

The thin-film EL element includes a single luminous layer which can emit light. As shown in Fig. 6, a luminous layer 11 of thin-film EL elements having a double dielectric structure is composed of a 5000 A-thick thin-film layer of zinc sulphide containing nitrogen.

It is formed by laminating in order on a transparent glass baseplate 12, a transparent electrode 13

of a tin oxide (SnO_2) layer, etc., a first dielectric layer 14, a luminous layer 11 of zinc sulphide containing nitrogen as mentioned above, a second dielectric layer 15, and a rear electrode 16 of a thin alminum (Al) film.

For the formation of the luminous layer, a process is employed in which a zinc sulphide layer is formed by sputtering and nitrogen is then implanted in the zinc sulphide layer by ion implantation.

The emission spectrum of the luminescence obtained by applying an alternate electric field across the thin-film EL element has a wide range of luminescent wavelengths covering three primary colors as shown in Fig. 7.

As just described above, according to the thin-film EL element, true white light is provided and a full-color display panel can be fabricated.

While for the formation of the luminous layer the process including the implantation of nitrogen ions after the formation of the zinc sulfide film has been used, the present invention is not limited to this process. A process for forming the luminous layer by sputtering or CVD in an atmosphere of nitrogen may be used. Namely, it may be selected as needed.

Example 3:

A further example of the thin-film EL element used in the color display apparatus will be described.

As shown in Fig. 8, the thin-film EL element has a double dielectric layer structure which includes on a transparent glass baseplate 21 a transparent electrode 22 of tin oxide layer (SnO_2), etc., a first dielectric layer 23, a luminous layer 24 of ZnS: Mn, a black dielectric layer 25 of tantalum oxide (TaO_x where $x < 2.5$) and a rear electrode 26 of a thin aluminum (Al) film laminated in order.

The second dielectric layer has the relationship between wavelength and transmittance as shown in Fig. 9, which shows that the transmittance is less than 10 % in a visual light area.

A curve a in Fig. 10 shows the relationship between luminance and contrast ratio of the thin-film element (cd/m^2).

For comparison purposes, a curve b in Fig. 10 shows the relationship between luminance (cd/m^2) and contrast ratio of a conventional thin-film EL element using tantalum pentaoxide (Ta_2O_5) as a material constituting the second dielectric layer.

It will be clear from these comparison that in order to obtain a contrast ratio of 1 : 100 at an illumination of 1000 lx, the conventional thin-film EL element requires a luminance of 200 cd/m^2 while the inventive element only requires 20 cd/m^2, which illustrates that the contrast is greatly improved.

The black tantalum oxide film can be easily obtained by only changing partial conditions of a process for forming a transparent tantalum pentaoxide layer used conventionally - for example, by lowering only the partial pressure of oxygen under the same conditions as those in the sputtering process. Thus, the manufacturing work is performed efficiently.

While in the particular example the black tantalum oxide film is used instead of the conventional transparent tantalum pentaoxide film, a composite film 25' of a black tantalum oxide layer 25a and a different dielectric layer 25b may be formed as the second dielectric layer as shown in Fig. 11. It may be applicable to other oxides and nitrides such as yttrium oxides, silicon oxides, silicon nitrides, etc., as in a thin-film transistor.

The materials constituting the luminous layer,

transparent electrode and rear electrode are not limited to those of the particular example, and other materials are effective, of course.

The tantalum oxide film may be selected as needed among ones having transmittance of 30 % or less in a visual area. If a film having a transmittance of more than 30 % is used, it would reduce the contrast ratio.

The relationship between partial pressure of oxygen and transmittance is also ascertained from experiments such as those shown below.

A TaO_x film was formed on a glass baseplate by using Ta_2O_5 as the target and changing the partial pressure of oxygen in a high frequency (RF) sputtering process.

Fig. 12 shows the results of measurement of the relationship between the partial pressure of oxygen at the film formation and transmittance of the formed TaO_x film when the partial pressure of argon (Ar) was 5×10^{-3} (Torr). (In Fig. 12, the axis of abscessas represents the partial pressure of oxygen $\times 10^{-5}$ (Torr) and the axis of ordinates the transmittance (%).)

It will be clear from Fig. 12 that by reducing the partial pressure of oxygen and the proportion in composition of oxygen the transmittance is reduced. The transmittance of the TaO_x film formed at the partial pressure of oxygen = 0 was about 2 %.

According to the present invention, the proportion in composition of oxygen or nitrogen in insulating oxides or nitrides is reduced stoichiometrically, so that the manufacturing process is not substantially changed and a black insulating film can be very easily provided.

Example 4:

Another example of the thin-film EL element used in the color display apparatus will be described.

Fig. 13 shows a thin-film EL element as an example of the present invention.

The EL element includes on a transparent glass baseplate 31 a transparent electrode 32 of tin oxide (SiO_2) layer, etc., a first dielectric layer 33 of yttrium oxide (Y_2O_3), a luminous layer 34 of zinc sulphide (ZnS): manganese (Mn), a second dielectric layer 35 the proportion in composition of which continuously changes from black to transparent, and a rear electrode 36 of an aluminum layer, laminated in order.

The second dielectric layer has a proportion in composition continuously changing stoichiometrically from a black tantalum oxide film (TaO_x where $x < 2.5$) 3000 Å thick to a transparent tantalum pentaoxide (Ta_2O_5) film and has a thickness of 5000 Å in total.

The second dielectric layer is formed by RF sputtering. Tantalum pentaoxide is used as the target. Initially, a tantalum oxide (TaO_x where $x < 2.5$) film 3000 Å thick is deposited under reduced partial pressure of oxygen, and the partial pressure of oxygen is then gradually increased to thereby deposit continuously a tantalum oxide ($TaO_{x'}$ where $x' = x - 2.5$) film 2000 Å thick.

Fig. 14(a) and Fig. 14(b) show the relationship between oxide content of a tantalum oxide film and its transmittance (%) to light having a wavelength λ = 600 nm and the relationship between oxygen content and resistivity (Ω cm), respectively, when the tantalum oxide film is formed using tantalum pentaoxide as the target by RF sputtering and when the oxygen content is changed. As will be clear from these Figures, as the oxygen content decreases, the transmittance as well as resistivity is reduced whereas as the oxygen content increases, the resistivity also increases.

A curve a in Fig. 15 shows the luminance-voltage characteristic of the thin-film EL element thus formed. For comparison purposes, curves b and c in Fig. 15 show the luminance-voltage characteristics of a thin-film EL element having the same structure as the example 4 except for the second dielectric layer which consists of a single (black) tantalum oxide (TaO_x where $x < 2.5$) film 5000 Å thick and another thin-film EL element having the same structure as the example 4 except for the second dielectric layer having a two-layered structure which consists of a black tantalum oxide (TaO_x where $x < 2.5$) film 4000 Å thick and a transparent tantalum pentaoxide film (Ta_2O_5) 1000 Å thick. The elements a and b are substantially equal in contrast and the element c is somewhat lower. (In Fig. 15, the axis of ordinates represents luminance and the axis of abscessas applied voltage.) It will be understood that the voltages which the elements can withstand for a long time (dielectric strength) are 165 V for a, 125 V for b and 150 V for c and that the thin-film EL element of the inventive example in which the second dielectric layer is continuously changed has a greatly improved dielectric strength.

As just described above, the thin-film EL element according to the inventive examples exhibits high contrast and high breakdown voltage.

It is to be noted that the ratio in film thickness of the black layer, continuous layer and transparent layer of the second dielectric layer is not limited to the particular examples and may be changed as needed.

The materials of the other respective layers are not limited to the particular examples and may be changed as needed. In addition, the inventive thin-film EL elements may be used as a light source for writing signals into, reading signals out of and erasing signals in a recording medium for illuminating purposes in addition to

the display apparatus applications.

With thin-film EL elements used in an display apparatus under environmental conditions in which the environmental brightness changes, there is the problem that contrast is lowered and the display becomes difficult to view when the environmental brightness-illumination increases whereas the display is excessively bright if the luminance is constant when the illumination is extremely low. In order to cope with this problem, for example as shown in Fig. 16, a photosensor 37 may be provided. The voltage applied to the thin-film EL element is controlled in accordance with a signal from the photosensor to change the luminance to thereby maintain the contrast constant and improve the display effect.

As shown in Fig. 17, control of the applied voltage is easy if it is provided so as to change the applied voltage stepwise to thereby maintain the contrast within a predetermined range ($a \pm b$) when the signal from the photosensor exceeds a predetermined value.

For example, assume that the thin-film EL element is emitting light at a certain luminance of A. The luminance is changed stepwise as shown by A, B, C, D. If the environmental illumination or the detection output from the photosensor 7 becomes 1000 lx, the applied voltage is increased such that the luminance becomes B; if the illumination further increases to about 5000 lx, the luminance changes to C and so on. In this way, the contrast can be maintained within a substantially constant range without being influenced by the environmental illuminations.

The applied voltage may be changed continuously in accordance with the detection output from the photosensor.

CLAIMS

(1) A color display apparatus characterized by:

an EL element section including a plurality of arranged cells, each cell including a thin-film EL element formed so as to emit white light; and

a color filter section including a plurality of predetermined color filters corresponding to the cells and disposed on the surface of the EL element section,

respective voltages applied to the thin-film EL elements being controlled in accordance with image information for color display.

(2) A color display apparatus according to claim (1), characterized in that the respective thin-film EL elements are arranged on the same glass baseplate, and each thin-film EL element has a double dielectric structure in which a transparent electrode, a first dielectric layer, a luminous layer, a second dielectric layer and a rear electrode are laminated in order.

(3) A color display apparatus according to claim (1), characterized in that each of the cells of the EL element section includes the dielectric layer, luminous layer and second dielectric layer formed integrally, and that the transparent electrode and rear electrode are orthogonal to each other, each electrode including a plurality of stripe lines arranged at predetermined intervals, the intersections of the orthogonal stripe lines are adapted to emit light.

(4) A color display apparatus according to claim (3), characterized in that the luminous layer has a three-layered structure including a red luminous layer, a green luminous layer and a blue luminous layer.

(5) A color display apparatus according to claim (4), characterized in that the red luminous layer includes a zinc sulphide layer (ZnS) which contains samarium (Sm) and fluorine (F).

(6) A color display apparatus according to claim (4), characterized in that the green luminous layer includes a zinc sulfide layer which contains erbium (Er) and fluorine.

(7) A color display apparatus according to claim (4), characterized in that the blue luminous layer includes a zinc sulfide layer which contains thulium (Tm) and fluorine.

(8) A color display apparatus according to claim (3), characterized in that the luminous layer includes a white light emitting layer which contains nitrogen (N).

(9) A color display apparatus according to claim (3), characterized in that the luminous layer includes a zinc sulphide film containing nitrogen.

(10) A color display apparatus according to claim (3), characterized in that the luminous layer includes a strontium sulphide (SrS) layer containing cerium (Ce) and europium (Eu).

(11) A color display apparatus according to claim (1), characterized in that the color filter section includes a dyeable polymer layer dyed by respecrtive colors.

(12) A thin film EL element comprising on a baseplate a transparent electrode, a first dielectric layer, a luminous layer, a second dielectric layer and a rear electrode laminated in order wherein the luminous layer is

caused to emit light by an electric field applied thereto, characterized in that

the second dielectric layer includes a tantalum oxide film the stoichiometric ratio of which changes continuously from black to transparent.

(13) A thin-film EL element according to claim (12), characterized in that the voltage applied to the luminous layer is controlled by the detection output from a photosensor disposed in the vicinity of the luminous layer.

(14) A method of making a thin-film EL element comprising on a baseplate a transparent electrode, a first dielectric layer, a luminous layer, a second dielectric layer and a rear electrode laminated in order, characterized in that

the step of forming the luminous layer comprises the steps of:

forming a thin zinc sulphide film; and

implanting nitrogen ions in the zinc sulphide film by ion implantation.

(15) A thin-film EL element comprising a luminous layer, a rear electrode and a dielectric layer intervening therebetween in which the luminous layer is caused to emit light by an electric field applied thereto, characterized in that

the dielectric layer includes an insulating film of insulating oxide or nitride in which the proportion in composition of oxygen or nitrogen is smaller than its stoichiometric value.

(16) A thin-film EL element according to claim (15), characterized in that the oxide is a tantalum oxide (TaO_x where $x < 2.5$).

(17) A thin film EL element according to claim (15), characterized in that the oxide is yttrium oxide (YO_x where $x < 3/2$).

(18) A thin film EL element according to claim (15), wherein the oxide is a silicon oxide (SiO_x where $x < 2$).

(19) A thin film EL element according to claim (15), characterized in that the nitride is a silicon nitride (SiN_x where $x < 4/3$).

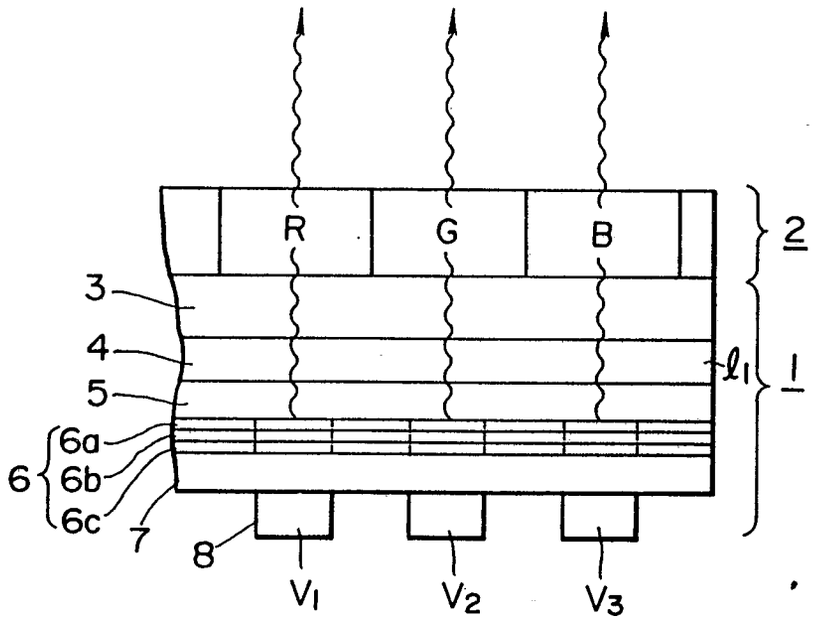
R
G
B
2
3
4
5
6
6a
6b
6c
7
8
l1
1
V1
V2
V3

FIG.1 (a)

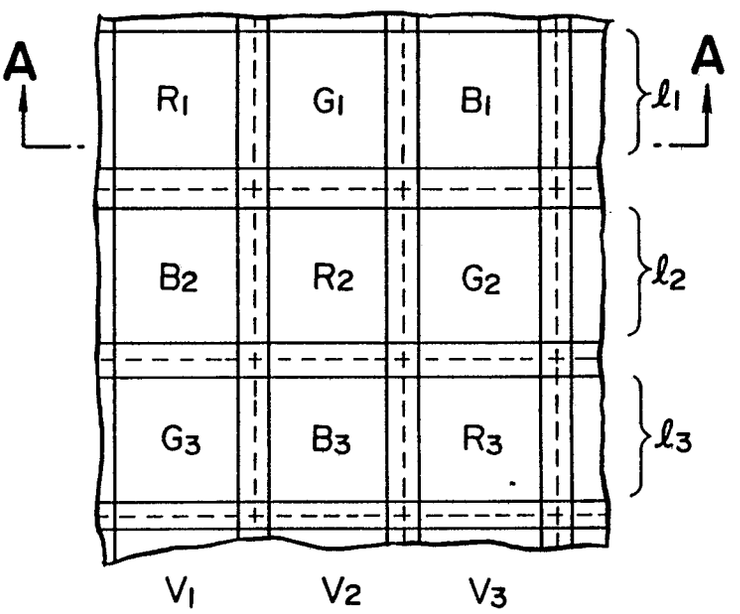
A
A
R1
G1
B1
B2
R2
G2
G3
B3
R3
l1
l2
l3
V1
V2
V3

FIG.1 (b)

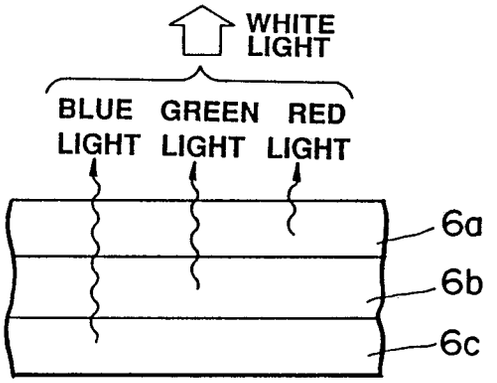
WHITE
LIGHT
BLUE
LIGHT
GREEN
LIGHT
RED
LIGHT
6a
6b
6c

FIG. 2 (a)

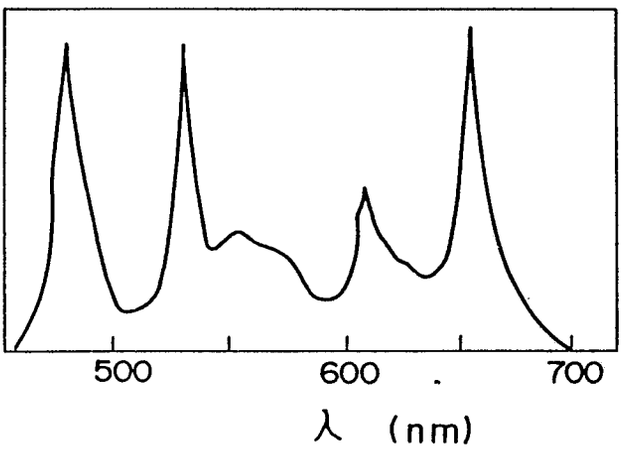
500
600
700
λ (nm)

FIG. 2 (b)

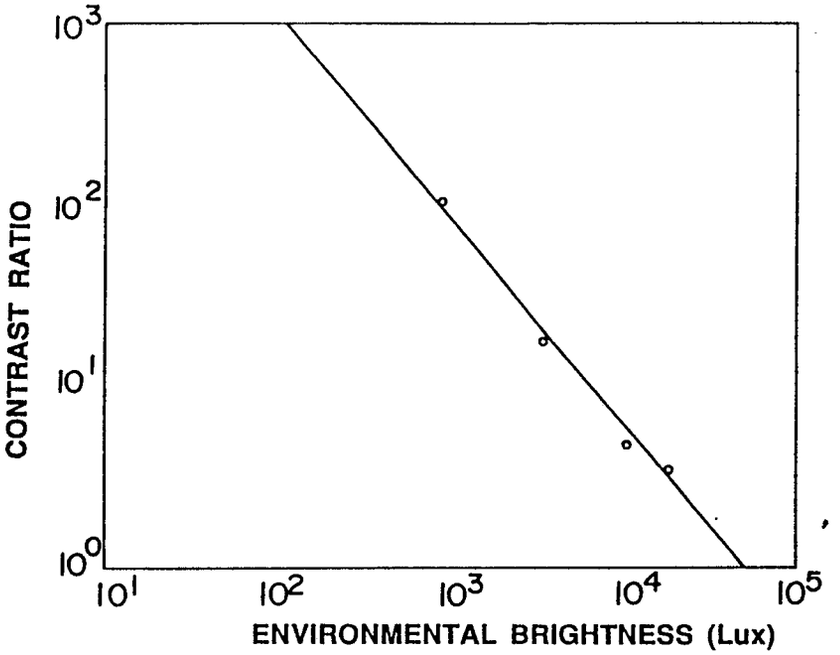
10^3
10^2
10^1
10^0
CONTRAST RATIO
10^1
10^2
10^3
10^4
10^5
ENVIRONMENTAL BRIGHTNESS (Lux)

FIG. 3

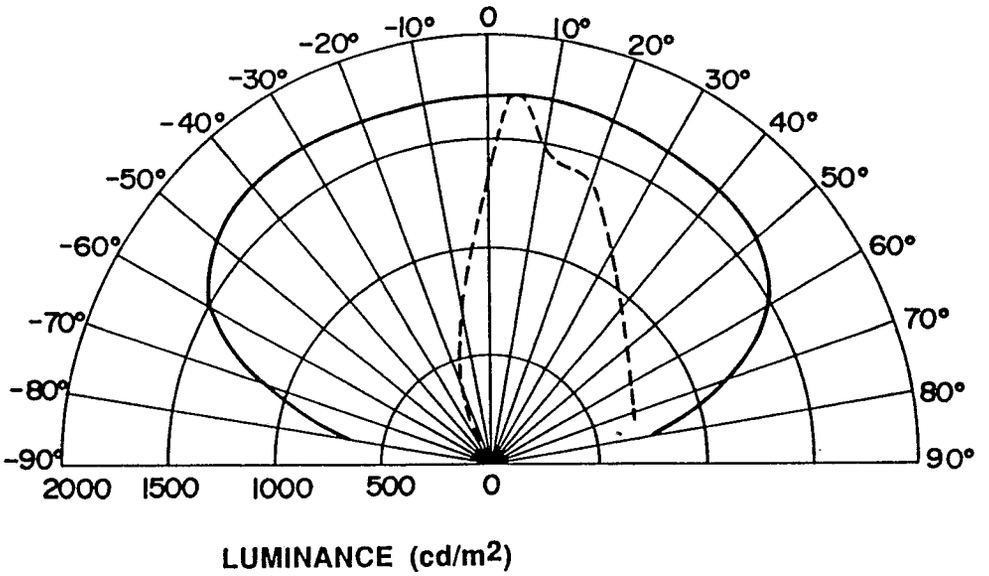
0
-10°
10°
-20°
20°
-30°
30°
-40°
40°
-50°
50°
-60°
60°
-70°
70°
-80°
80°
-90°
90°
2000
1500
1000
500
0
LUMINANCE (cd/m2)

FIG. 4

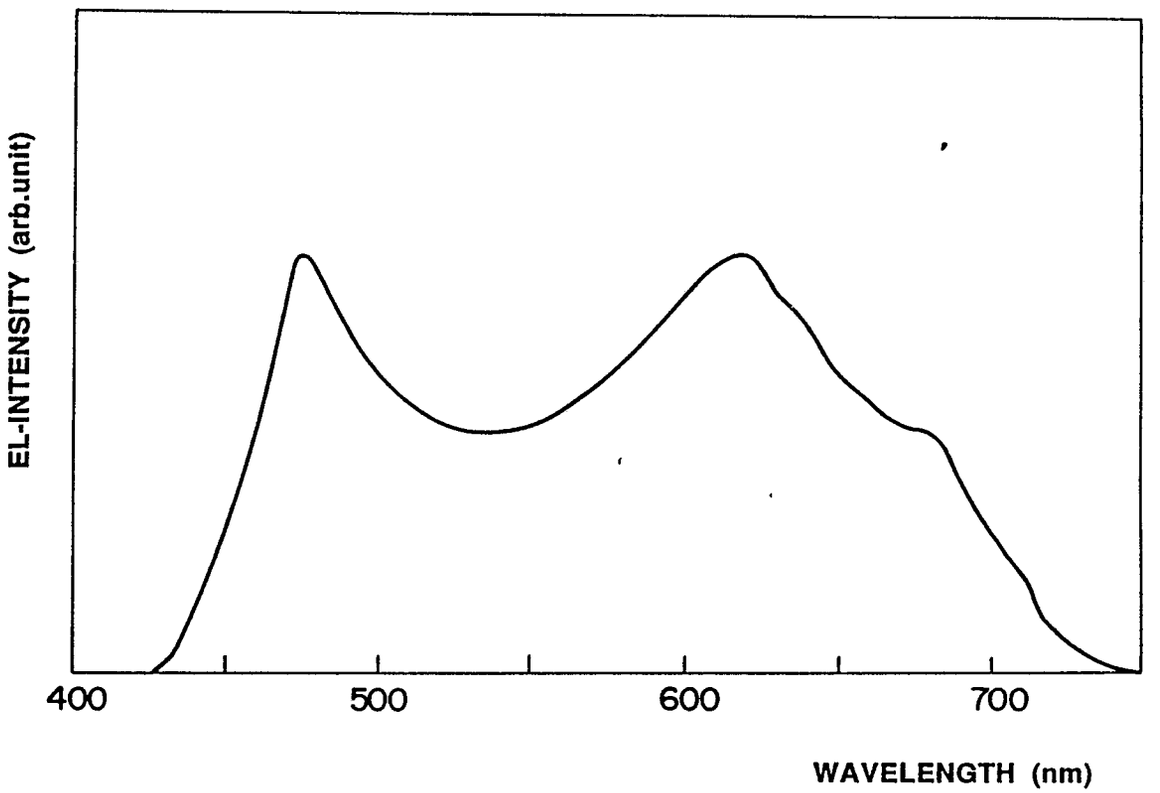

FIG.5

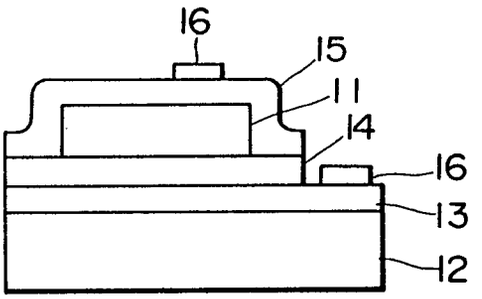
16
15
11
14
16
13
12

FIG.6

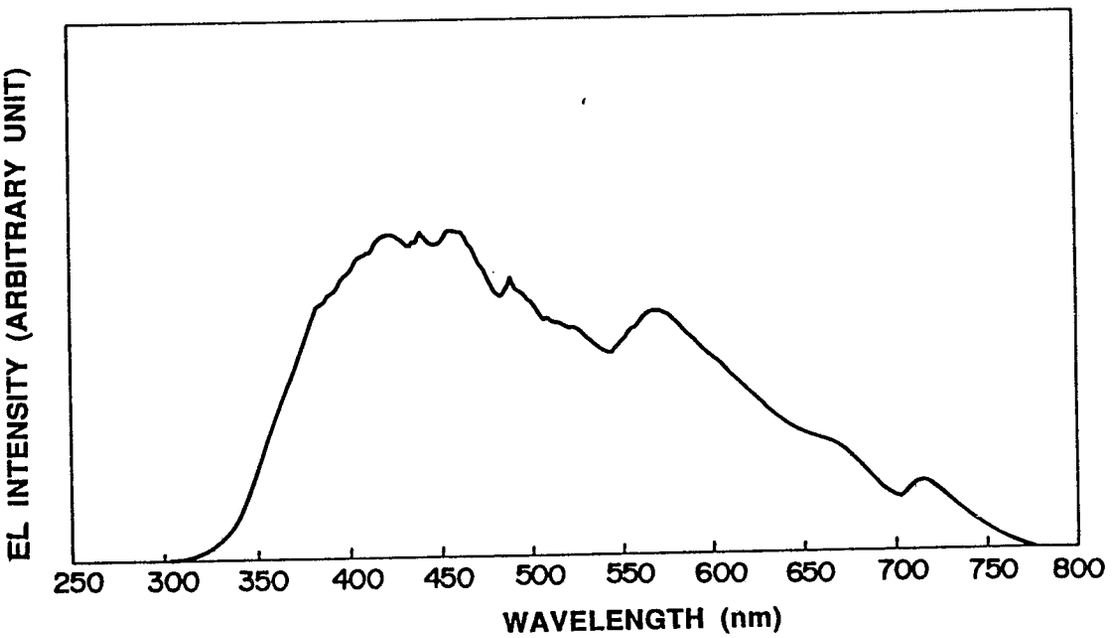
EL INTENSITY (ARBITRARY UNIT)
250
300
350
400
450
500
550
600
650
700
750
800
WAVELENGTH (nm)

FIG.7

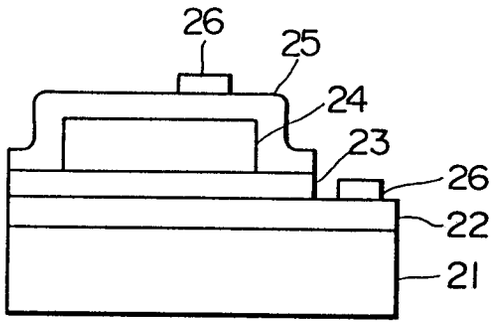
26
25
24
23
26
22
21

FIG. 8

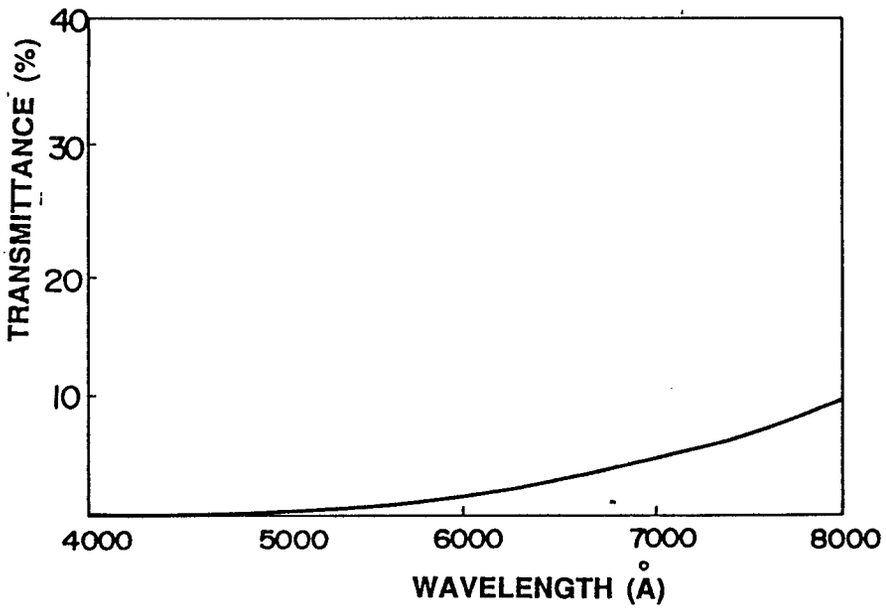
40
30
20
10
TRANSMITTANCE (%)
4000
5000
6000
7000
8000
WAVELENGTH (Å)

FIG. 9

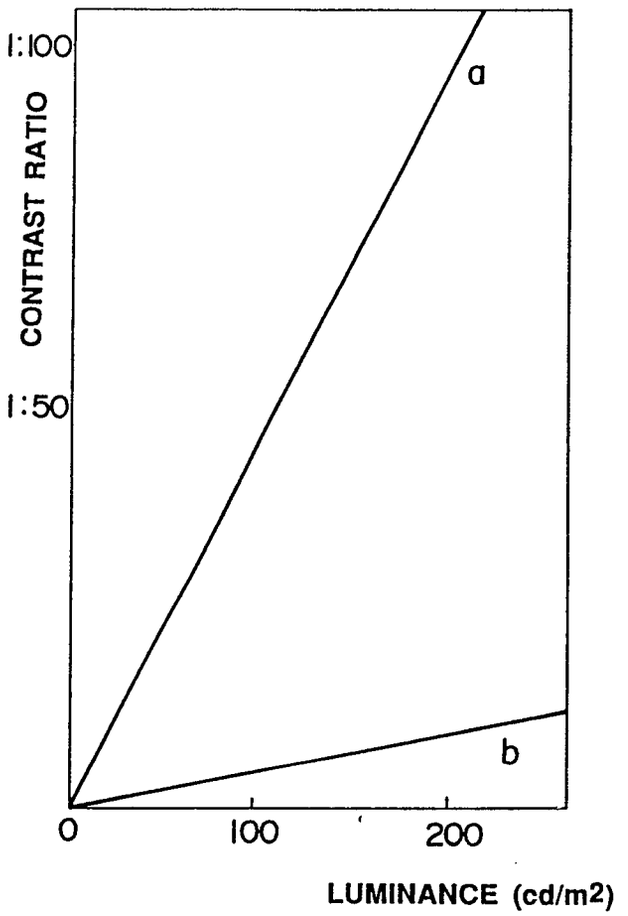
1:100
1:50
CONTRAST RATIO
a
b
0
100
200
LUMINANCE (cd/m2)

FIG.10

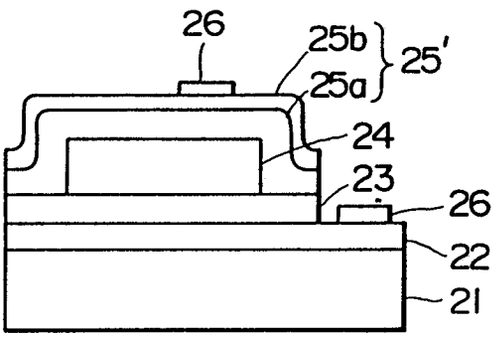
26
25b
25a
25'
24
23
26
22
21

FIG.11

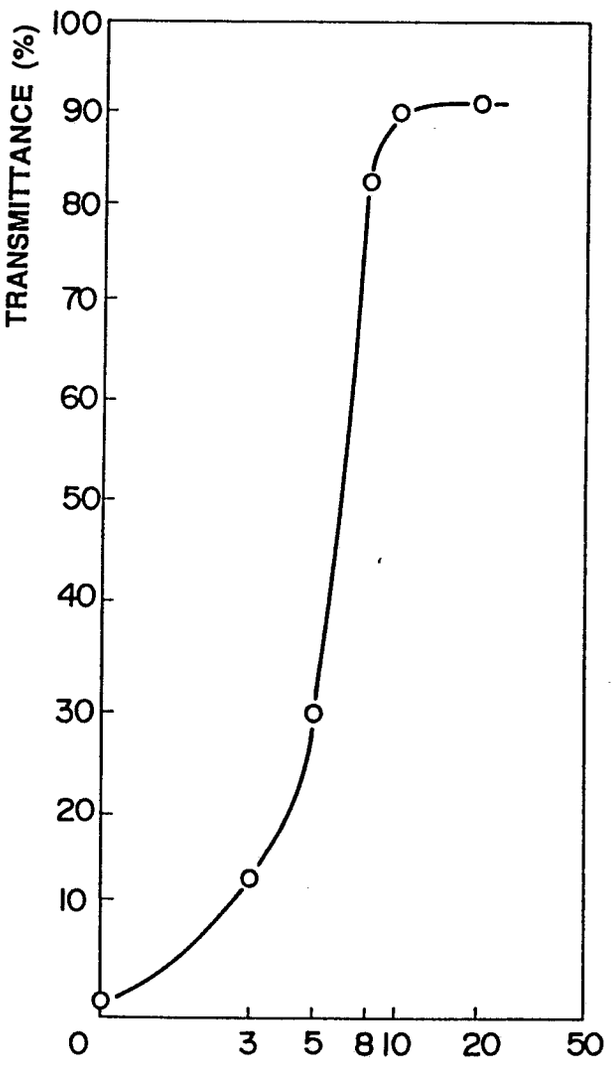

FIG.12

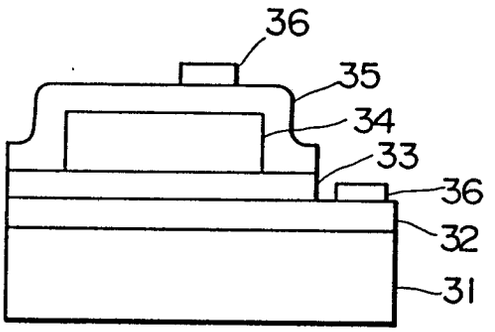

FIG.13

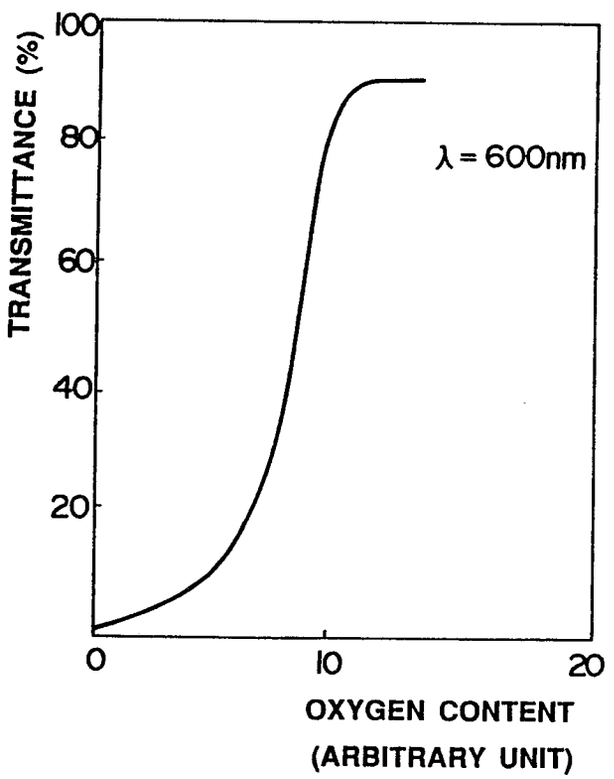

FIG.14 (a)

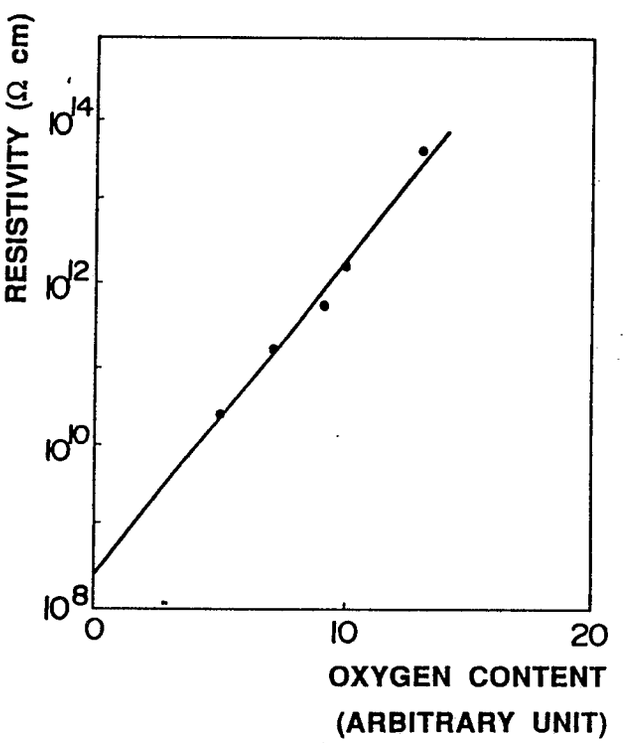

FIG.14 (b)

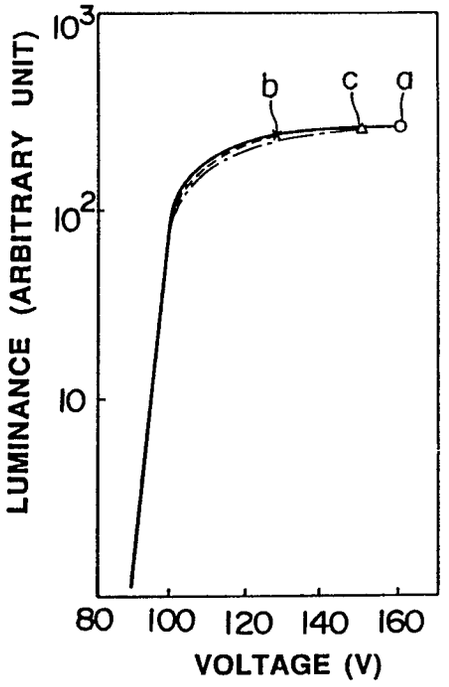

FIG.15

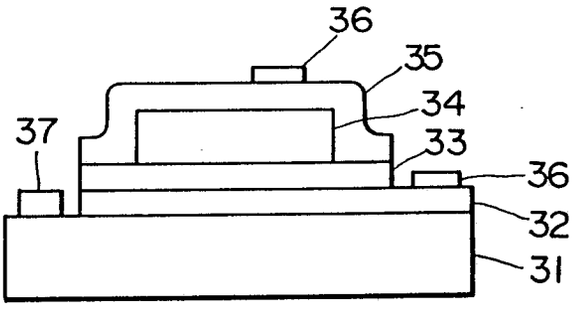

FIG.16

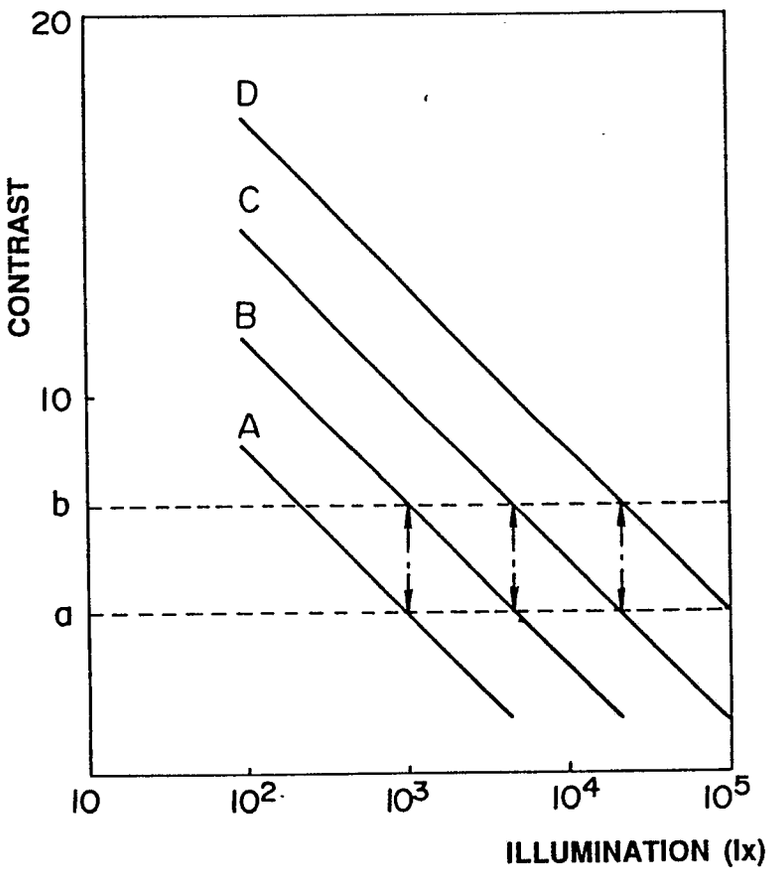

FIG.17

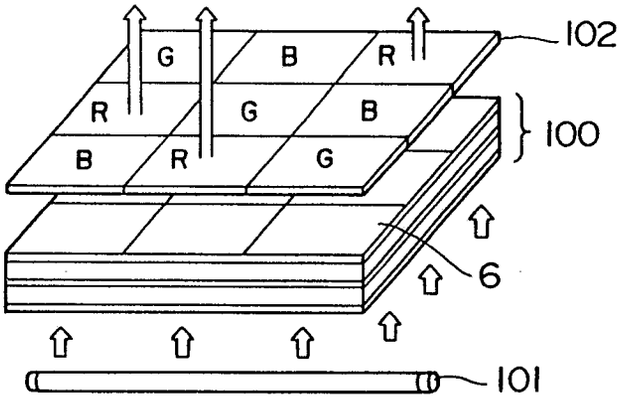
G
B
R
R
G
B
B
R
G
102
100
6
101

FIG.18

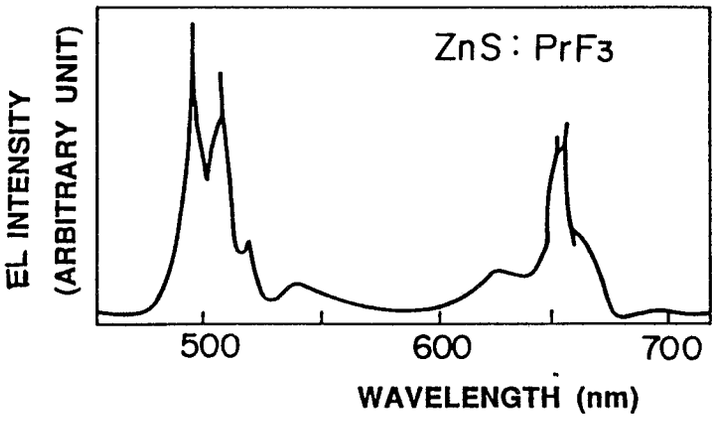
ZnS : PrF3
EL INTENSITY
(ARBITRARY UNIT)
500
600
700
WAVELENGTH (nm)

FIG.19

INTERNATIONAL SEARCH REPORT

International Application No PCT/JP87/00469

I. CLASSIFICATION OF SUBJECT MATTER (if several classification symbols apply, indicate all) [3]

According to International Patent Classification (IPC) or to both National Classification and IPC

Int.Cl[4] G09F9/30, H05B33/22

II. FIELDS SEARCHED

Minimum Documentation Searched [4]

Classification System [5]	Classification Symbols
IPC	G09F9/30, H05B33/22

Documentation Searched other than Minimum Documentation to the Extent that such Documents are Included in the Fields Searched [6]

Jitsuyo Shinan Koho	1926 - 1987
Kokai Jitsuyo Shinan Koho	1971 - 1987

III. DOCUMENTS CONSIDERED TO BE RELEVANT [14]

Category *	Citation of Document, [16] with indication, where appropriate, of the relevant passages [17]	Relevant to Claim No. [18]
X	JP, U, 61-57497 (Nissan Motor Co., Ltd.) 17 April 1986 (17. 04. 86) (Family: none)	1-11
Y	JP, A, 59-56391 (Toshiba Corp.) 31 March 1984 (31. 03. 84) (Family: none)	2-4
A	JP, A, 60-232697 (Hoya Corporation) 19 November 1985 (19. 11. 85) (Family: none)	12
E	JP, A, 61-220292 (Hoya Corporation) 30 September 1986 (30. 09. 86) (Family: none)	12
X	JP, A, 60-134277 (Oki Electric Industry Co., Ltd.) 17 July 1985 (17. 07. 85) (Family: none)	14

* Special categories of cited documents: [15]

"A" document defining the general state of the art which is not considered to be of particular relevance

"E" earlier document but published on or after the international filing date

"L" document which may throw doubts on priority claim(s) or which is cited to establish the publication date of another citation or other special reason (as specified)

"O" document referring to an oral disclosure, use, exhibition or other means

"P" document published prior to the international filing date but later than the priority date claimed

"T" later document published after the international filing date or priority date and not in conflict with the application but cited to understand the principle or theory underlying the invention

"X" document of particular relevance; the claimed invention cannot be considered novel or cannot be considered to involve an inventive step

"Y" document of particular relevance; the claimed invention cannot be considered to involve an inventive step when the document is combined with one or more other such documents, such combination being obvious to a person skilled in the art

"&" document member of the same patent family

IV. CERTIFICATION

Date of the Actual Completion of the International Search [2]	Date of Mailing of this International Search Report [2]
September 30, 1987 (30.09.87)	October 19, 1987 (19.10.87)

International Searching Authority [1]	Signature of Authorized Officer [20]
Japanese Patent Office	

FURTHER INFORMATION CONTINUED FROM THE SECOND SHEET

X	JP, A, 60-74384 (Matsushita Electric Ind. Co., Ltd.) 26 April 1985 (26. 04. 85) & EP, A, 143528	15-19

V. ☐ OBSERVATIONS WHERE CERTAIN CLAIMS WERE FOUND UNSEARCHABLE [10]

This international search report has not been established in respect of certain claims under Article 17(2) (a) for the following reasons:

1. ☐ Claim numbers..... because they relate to subject matter [12] not required to be searched by this Authority, namely:

2. ☐ Claim numbers....., because they relate to parts of the international application that do not comply with the prescribed requirements to such an extent that no meaningful international search can be carried out [13], specifically:

VI. ☐ OBSERVATIONS WHERE UNITY OF INVENTION IS LACKING [11]

This International Searching Authority found multiple inventions in this international application as follows:

1. ☐ As all required additional search fees were timely paid by the applicant, this international search report covers all searchable claims of the international application.
2. ☐ As only some of the required additional search fees were timely paid by the applicant, this international search report covers only those claims of the international application for which fees were paid, specifically claims:
3. ☐ No required additional search fees were timely paid by the applicant. Consequently, this international search report is restricted to the invention first mentioned in the claims; it is covered by claim numbers:
4. ☐ As all searchable claims could be searched without effort justifying an additional fee, the International Searching Authority did not invite payment of any additional fee.

Remark on Protest

☐ The additional search fees were accompanied by applicant's protest.

☐ No protest accompanied the payment of additional search fees.