Oct. 10, 1967 J. A. RAKOWICZ ETAL 3,345,943

INKING DEVICES FOR PRINTERS

Filed Aug. 17, 1965 2 Sheets-Sheet 1

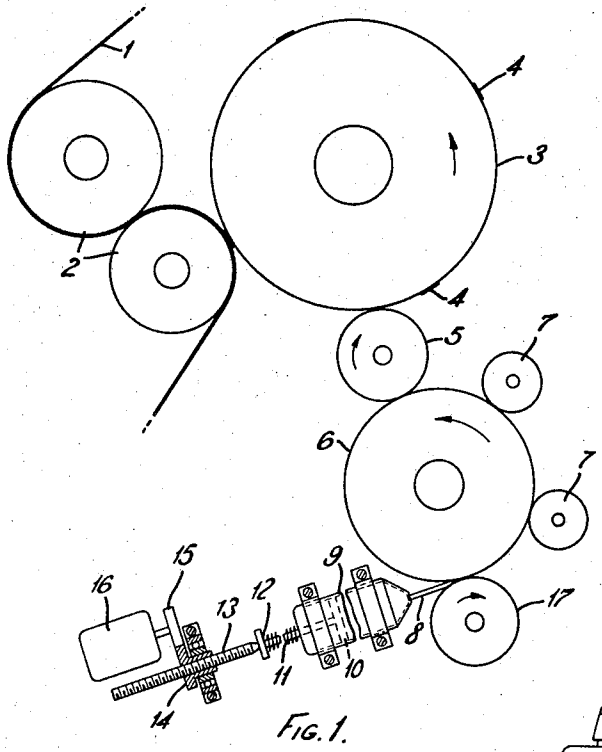

FIG. 1.

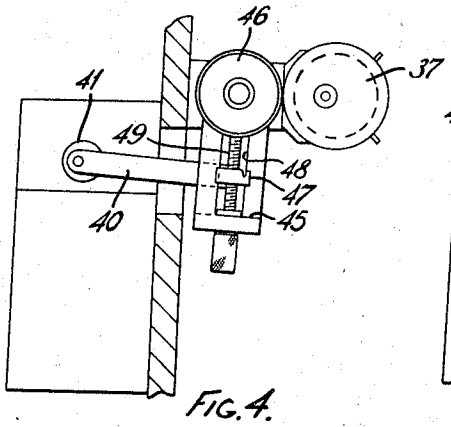

FIG. 4.

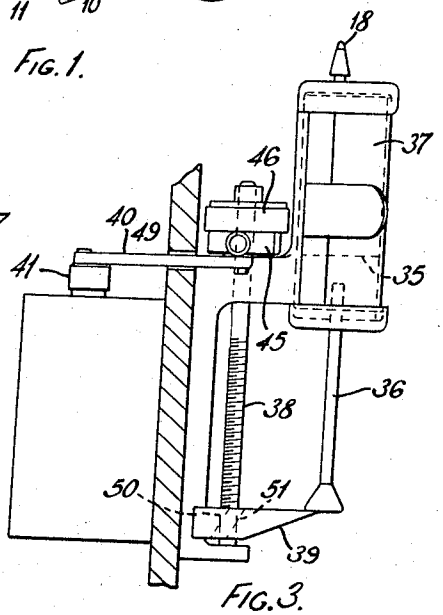

FIG. 3.

Inventors:
Jan Antoni Rakowicz
Geoffrey Arnold Wark

Watson, Cole, Grindle & Watson
Attorneys.

Oct. 10, 1967 J. A. RAKOWICZ ETAL 3,345,943

INKING DEVICES FOR PRINTERS

Filed Aug. 17, 1965 2 Sheets-Sheet 2

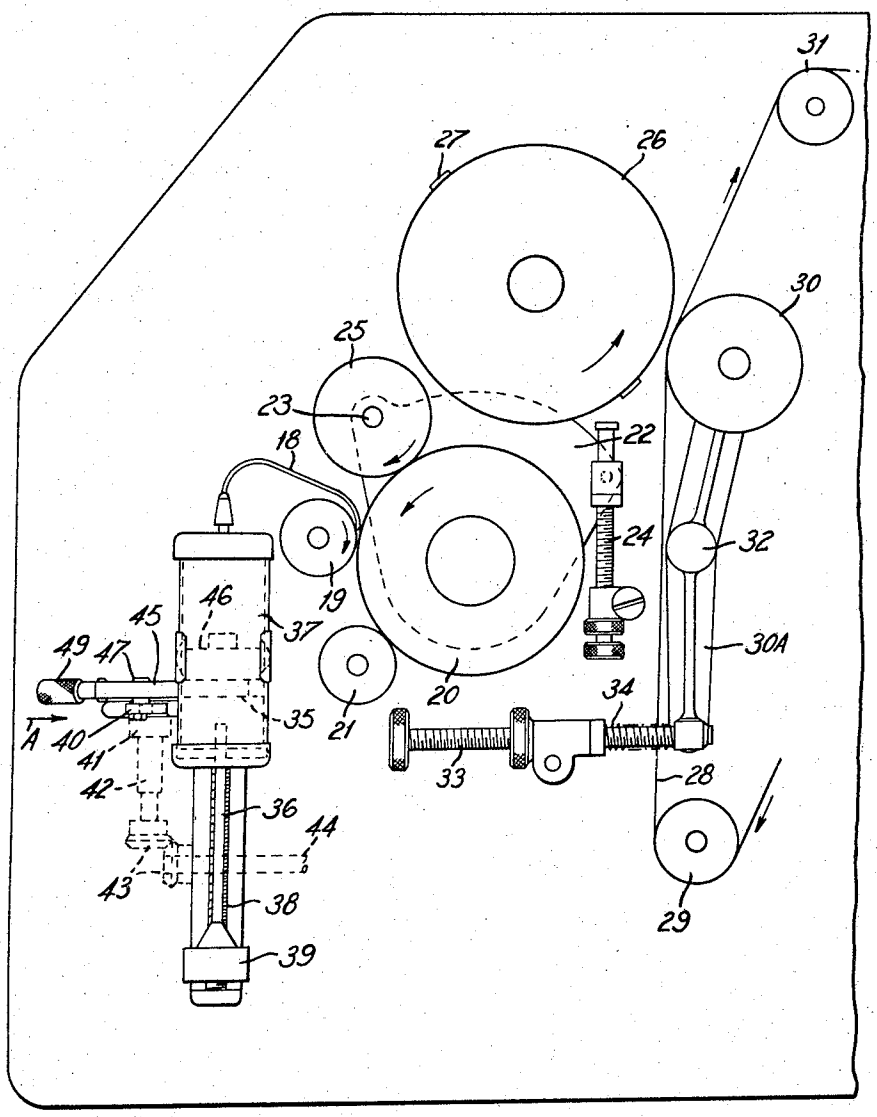

FIG. 2.

Inventors:
Jan Antoni Rakowicz
Geoffrey Arnold Wark

Watson, Cole, Grindle + Watson
Attorneys

United States Patent Office

3,345,943

Patented Oct. 10, 1967

1

3,345,943

INKING DEVICES FOR PRINTERS

Jan Antoni Rakowicz and Geoffrey Arnold Wark, London, England, assignors to The Molins Organisation Limited, London, England, a corporation of Great Britain

Filed Aug. 17, 1965, Ser. No. 480,302
Claims priority, application Great Britain, Sept. 1, 1964, 35,783/64
3 Claims. (Cl. 101—366)

ABSTRACT OF THE DISCLOSURE

This invention relates to a device for feeding ink at a metered rate to a pair of inking rollers in a letterpress printer. The device comprises a piston-cylinder arrangement with a nozzle for directing ink to the nip between the rollers, the piston being driven by the intermittent rotation of a screw member which itself is driven by a sprag clutch and lever arrangement, the lever being driven by the letterpress printer. Means is provided for adjusting the effective length of the lever to regulate the amount of rotation of the sprag clutch with each stroke. Also means is provided for conveniently resetting the means for driving the piston when the supply of ink has been exhausted from the cylinder and is being refilled.

This invention concerns improvements in inking devices for printers and has among its objects to provide a device which can operate at a high speed without the risk of ink splashing and arranged to meter the ink, so that very fine printing can be achieved with uniform colour and density.

According to the invention an inking device for a letterpress printer comprises a pair of inking rollers running in contact and a fine nozzle arranged to fit in the nip of the two rollers so that a tiny wedge of ink is contained between the rollers and the nozzle, with means for feeding ink through the nozzle at a metered rate, depending upon the desired rate of consumption.

The nozzle may form part of a syringe, with means for feeding the piston of the syringe at the desired rate and the body of the syringe may be insulated so as to preserve the viscosity of the ink at the desired value, in spite of any changes in ambient temperature.

The nozzle referred to above may be the kind of nozzle used in hypodermic syringes and the syringe itself may be a hypodermic, with a capacity suitable for providing ink for any desired period of time. The piston may be pushed through the cylinder of the syringe by power driven means such as gearing driven by a variable speed electric motor, or by mechanism coupled to some other part of the printing machine.

The piston movement may be continuous or intermittent and examples of both arrangements are given later.

The invention will be more fully described with reference to the accompanying drawings, in which:

FIGURE 1 is an elevation, partly in section, of a portion of a printing machine embodying the invention;

FIGURE 2 is an elevation of part of a printing machine in which the ink-feeding arrangements differ somewhat from those shown in FIGURE 1;

FIGURE 3 is a view of a fragment of FIGURE 2 looking in the direction of the arrow A, part of the frame of the machine being in section; and

FIGURE 4 is an end elevation of FIGURE 3.

Referring first to FIGURE 1, **1** is a web which is to be printed and it is guided by a pair of rollers **2**, one of which runs near a letterpress die **3** which, as shown, has four printing surfaces **4** on it. The printing surfaces receive ink from a small roller **5** and this in turn receives ink from a large distributing roller **6**, which reciprocates on its shaft with distributors **7** operating on parts of its circumference. Beneath the roller **6** is another roller **17** and these two run in close contact and in the nip of the rollers there is arranged a nozzle **8**, which may be the nozzle of a hypodermic syringe, or some small nozzle suitable to enter between the nip of the rollers, and arranged vertually in contact with them. In fact there is a small clearance to avoid wear on the syringe nozzle and to clear the ink layer. The nozzle forms part of a syringe **9** which has a piston **10** having a piston rod **11** with a spring **12** tending to withdraw the piston from the neighbourhood of the nozzle. The syringe body is clamped in position as shown.

The piston rod **11** is engaged by a finely threaded screw **13** which works in an axially fixed nut consisting of a gear wheel **14** and this is rotated to feed the screw and drive the piston forward by means of a gear wheel **15** driven by a variable speed motor **16**. The screw is prevented from rotating by a spline or the like "not shown."

In operation the speed of the motor is adjusted so that the quantity of ink fed through the nozzle is exactly that required to provide adequate ink to the four printing surfaces of the roller **3** and the location of the nozzle is such that between the rollers **6** and **17** there is a tiny wedge of ink which cannot escape, since it is in a virtually closed compartment and thus there is no risk of ink splashing. The ink fed through the nozzle to the roller **6** is distributed over the roller **6** by the distributors **7** and a thin film of ink is provided to the transfer roller **5** and applied to the printing surfaces of the roller **3**. If desired the rollers **7** may be reciprocated axially to distribute the ink on roller **6** which then has no axial movement.

As shown, the syringe is large enough to contain a quantity of ink suitable for a run of a desired time, say several days, and the body may be surrounded by suitable lagging so as to keep the temperature within the interior of the syringe at a uniform level and retain the viscosity of the ink at a desired value.

It will be seen that in this example the piston **10** is moved continuously.

Referring now to FIGURE 2, the ink is fed as before through a nozzle **18**, into the nip of a roller **19** and a larger roller **20**. A distributor roller **21** which reciprocates axially spreads the ink on the roller **20**.

Ink on roller **20** is transferred to a further roller **25** which applies the ink to the letterpress die roller **26** which has printing surfaces **27** on it. The roller **25** is supported on a quadrant-shaped plate **22**, pivoted on the shaft of roller **20** and adjustable on the pivot by a screw **24**. In this way the roller **25** can be moved to adjust its pressure against the printing surfaces **27**.

The paper web **28** passes around rollers **29**, **30** and **31**, the roller **30** being carried on a lever **30A**, pivoted at **32** and adjustable on the pivot by a screw **33** and spring **34**. In this way the web can be brought into the desired contact with the printing surfaces **27**.

Ink is fed through the nozzle **18** by a piston **35**, fixed to a piston rod **36**, and movable in the body of a syringe **37**, the movement being effected by a screw **38** which has a nut **39** on it arranged to press on the end of the piston rod. The screw is rotated intermittently by a connecting rod **40** driven by a crank disc **41** which is rotated from the machine driving mechanism by a shaft **42** driven through bevel gear wheels **43** one of which is fixed to a shaft **44**, driven by said mechanism. The end of the connecting rod **40** remote from the crank disc is adjustably connected to a lever **45** which drives a sprag clutch **46**, to the driven member of which the screw **38** is fixed. The lever **45** has a nut **47** slidable in a slot **48**

of the lever and the position of the nut can be altered by a screw **49**, thus altering the throw of the sprag clutch and the amount of rotation of the screw for each revolution of the crank disc **41**.

In order to avoid the necessity of winding the nut **39** back along the screw **38** when it reaches the end of the thread, the nut has two holes in it which intersect. One hole **50** is tapped to suit the thread of the screw **38** and the other **51** is a clearance hole. By rocking the nut the clearance hole may be aligned with the screw and the nut can then be slid back to the starting position.

This arrangement therefore provides an adjustable intermittent feed of the ink.

If desired a temperature controller of any known kind may be provided for controlling the viscosity of the ink in the syringe and in either construction the mechanism for moving this piston may be controlled by a device which scans the printed web and regulates the ink flow as necessary to keep the print to a desired density.

It will be seen that the ink supply is dust proof and the arrangements shown are suitable for use with a variety of inks with differing viscosities.

Because the ink supply is virtually closed against evaporation there is no change in the colour of the ink, which can occur when a solvent evaporates from an open ink vessel.

While the invention has been described as applied to the feeding of ink for printing it can be used for feeding adhesives where the accurate application of desired quantities of adhesive is necessary.

Alternatively any other suitable means may be provided for feeding ink to the nozzle, for example a pump such as is used for feeding fuel to some I.C. engines.

The above description has dealt mainly with a small nozzle such as is used in a hypodermic syringe and this is adequate for such work as printing cigarette webs where a line of small type is all that is required but for wider work a series of such nozzles may be used, side by side, or a nozzle of the width required to go into the nip of the inking rollers and extending lengthwise of the rollers for the distance required may be used.

What we claim as our invention and desire to secure by Letters Patent is:

1. An inking device for a letterpress printer comprising a pair of inking rollers mounted for running in contact with each other, a piston-cylinder arrangement for containing and feeding an ink supply, a fine nozzle arranged to fit in the nip of the two rollers, conduit means connecting said cylinder with said nozzle, and power driven means operatively connected to said piston to move said piston through said cylinder for feeding ink at a metered rate from said cylinder through said nozzle to maintain a small wedge of ink in said nip, said power driven means comprising a crank device operatively connected to and driven by said letterpress printer, a rod secured to said piston, an axially fixed screw having a nut thereon which presses against said rod whereby rotation of said screw causes said nut, rod and piston to move, a sprag clutch secured to said screw, a lever for driving said clutch and a connecting rod secured to said lever and operatively connected to said letterpress printer whereby said screw is intermittently rotatable.

2. An inking device as claimed in claim **1** further comprising means for altering the throw of said sprag clutch, said means comprising a slot in said lever, a second nut in said slot and secured to said connecting rod, a manually rotatable screw operatively connected to said second nut, whereby adjustment of said screw and resultant adjustment of said second nut regulates the effective length of said lever and its angular movement with each stroke of the connecting rod.

3. An inking device as claimed in claim **1** in which the nut on the axially fixed screw has a threaded hole to engage the screw and a plain hole intersecting the threaded hole whereby the nut may be rocked on the screw to move the threaded hole out of engagement with the screw and align the plain hole therewith so that the nut may be slid back along the screw when it reaches the end of its advancing movement on the screw.

References Cited

UNITED STATES PATENTS

2,312,140	6/1943	Grupe	101—219
2,676,563	4/1954	Montgomery et al.	118—249 X
3,199,451	8/1965	Nitchie	101—366

ROBERT E. PULFREY, *Primary Examiner.*

F. A. WINANS, *Assistant Examiner.*