June 7, 1927. 1,631,530

A. F. HOFFMAN

BOTTLING MACHINE

Filed April 16, 1926 5 Sheets-Sheet 1

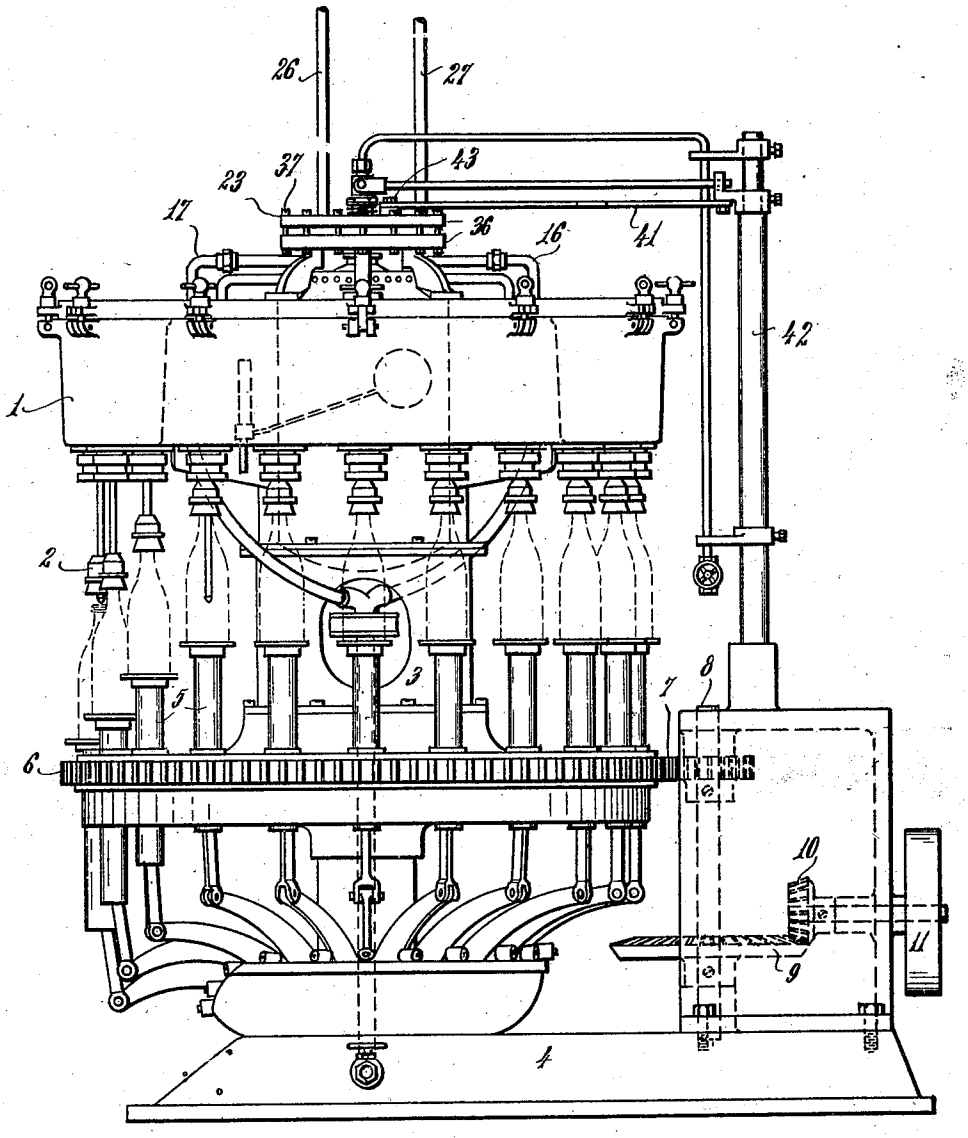

Fig. 1.

INVENTOR
Albert F. Hoffman
BY
A. F. Baume
ATTORNEY

June 7, 1927. 1,631,530

A. F. HOFFMAN

BOTTLING MACHINE

Filed April 16, 1926 5 Sheets-Sheet 2

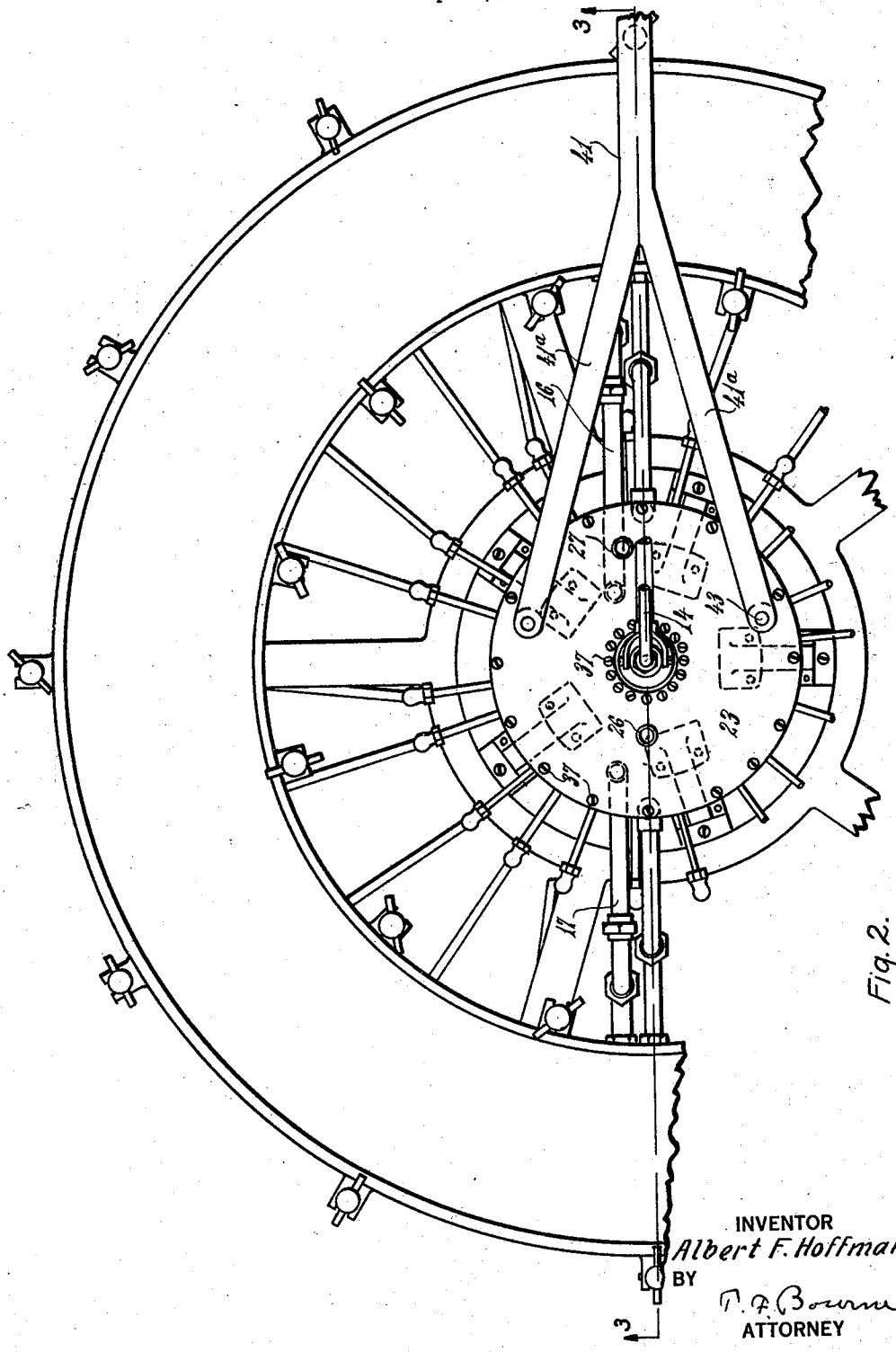

Fig. 2.

INVENTOR
Albert F. Hoffman
BY
T. F. Bourne
ATTORNEY

June 7, 1927.

1,631,530

A. F. HOFFMAN

BOTTLING MACHINE

Filed April 16, 1926

5 Sheets-Sheet 3

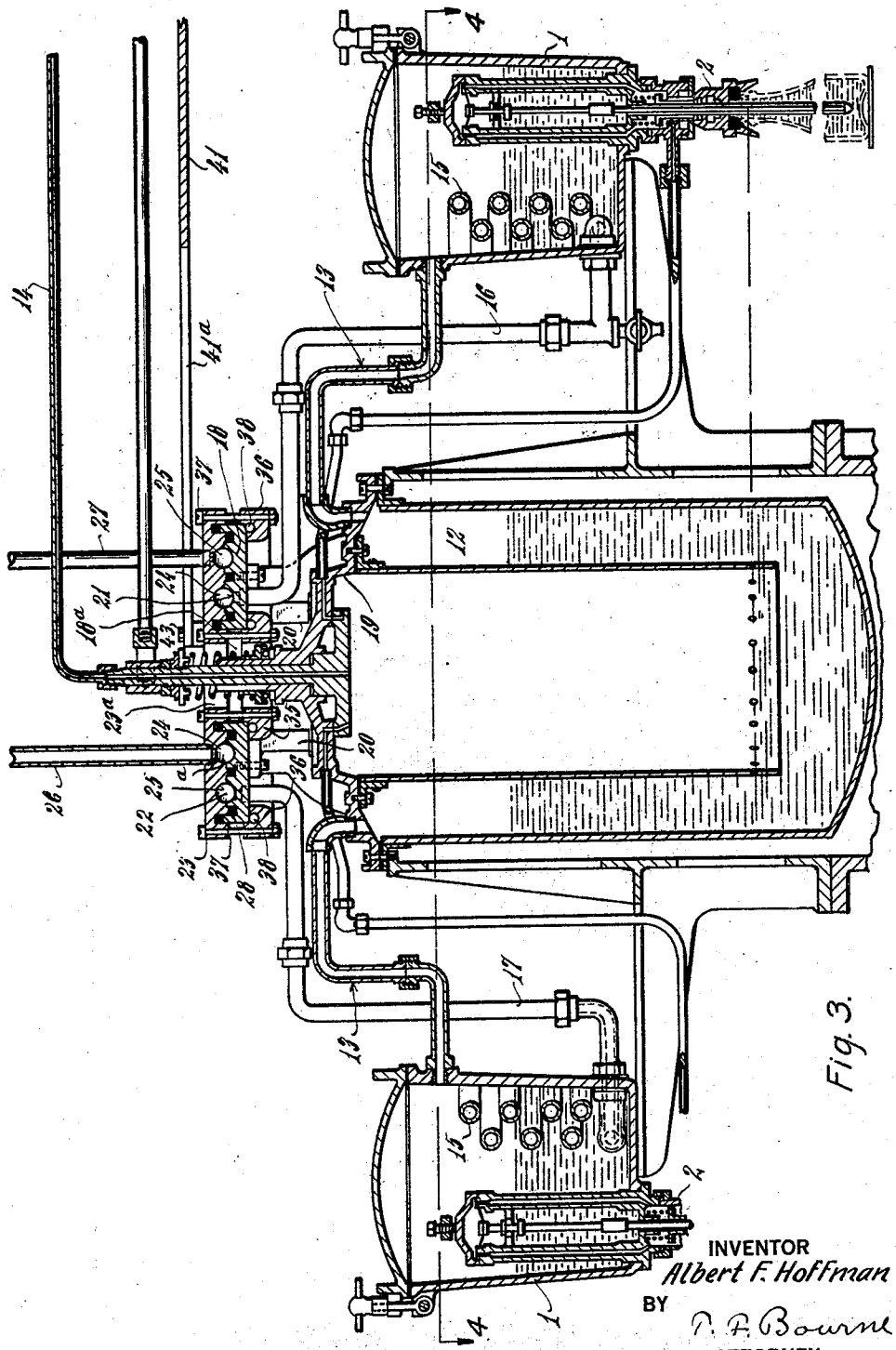

Fig. 3.

INVENTOR
Albert F. Hoffman
BY
T. F. Bourne
ATTORNEY

June 7, 1927. 1,631,530

A. F. HOFFMAN

BOTTLING MACHINE

Filed April 16. 1926 5 Sheets-Sheet 4

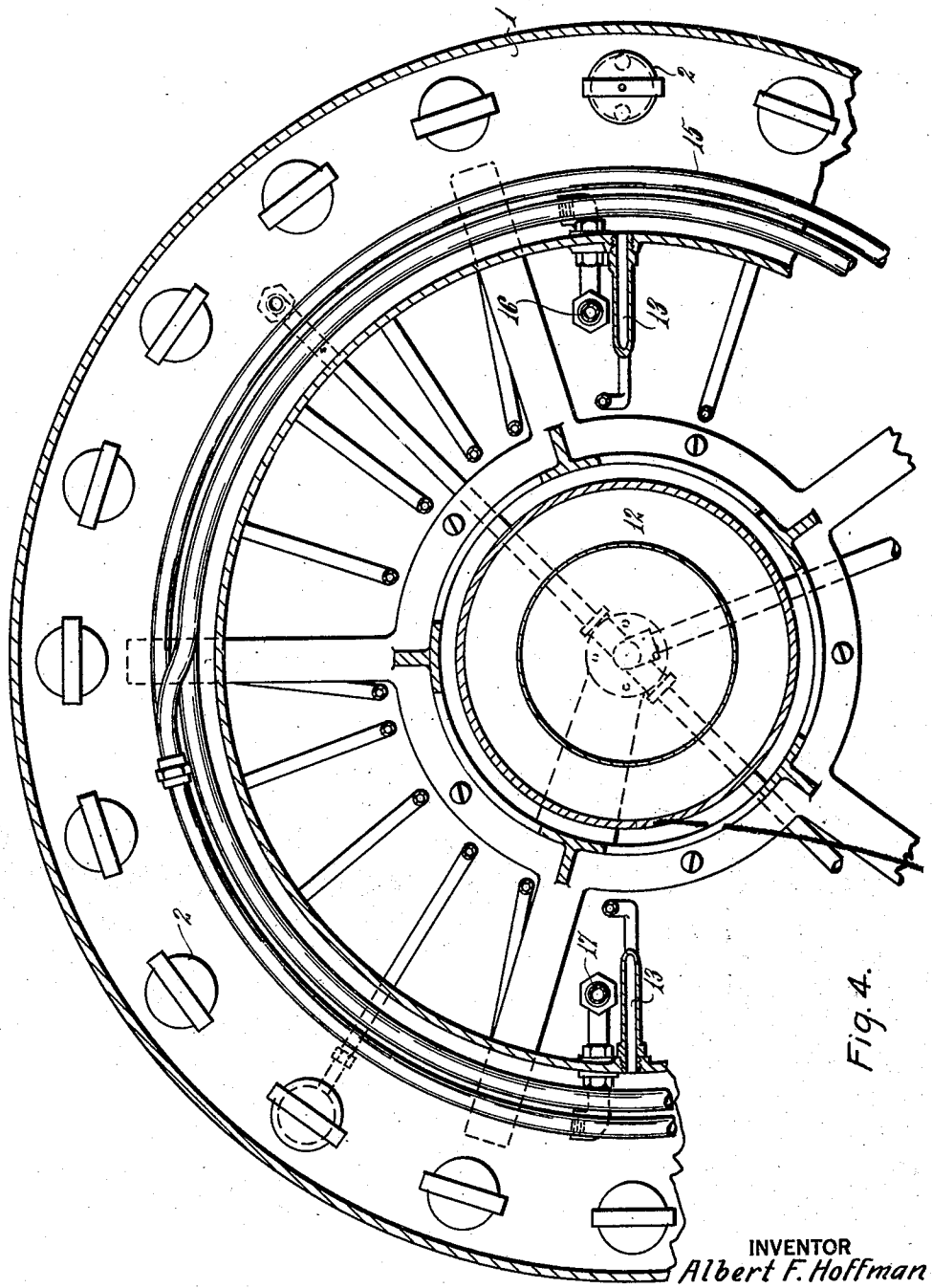

Fig. 4.

INVENTOR
Albert F. Hoffman
BY
T. F. Bacon
ATTORNEY

June 7, 1927. 1,631,530

A. F. HOFFMAN

BOTTLING MACHINE

Filed April 16. 1926 5 Sheets-Sheet 5

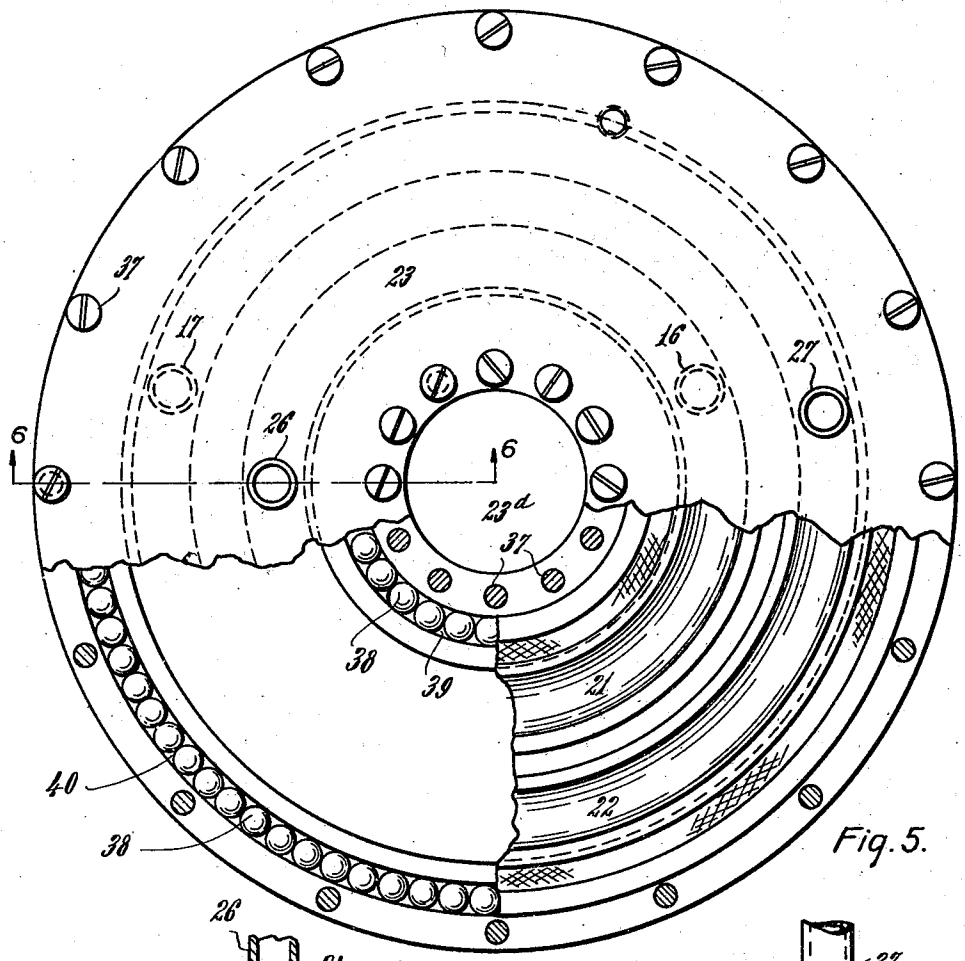

Fig. 5.

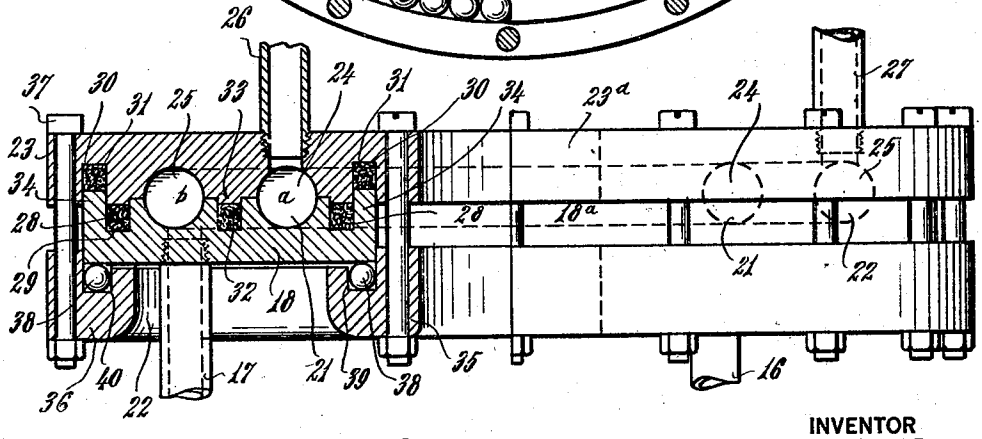

Fig. 6.

INVENTOR
Albert F. Hoffman
BY
C. A. Bourne
ATTORNEY

Patented June 7, 1927. 1,631,530

UNITED STATES PATENT OFFICE.

ALBERT F. HOFFMAN, OF NEWARK, NEW JERSEY.

BOTTLING MACHINE.

Application filed April 16, 1926. Serial No. 102,383.

My invention relates to improvements in the class of bottling machines in which the beverage to be bottled is maintained within a rotative annular chamber provided with nozzles through which the bottles are charged in a successive manner.

The object of my invention is to maintain the fluid to be bottled within the chamber at a desired cool temperature during bottling, and to retain the fluid cool in case the bottling operation ceases for a period of time, my invention being particularly applicable in the bottling of carbonated beverages to retain carbonated fluid at a substantially constant cool temperature to prevent the fluid from losing its carbonation and sparkling or effervescent qualities before bottling.

In carrying out my invention I provide a pipe or coil associated with or within the rotative fluid supply chamber of the bottling machine through which pipe or coil cooling fluid, such as brine, may be continuously circulated to maintain the fluid to be bottled at a desired cool temperature, and means which will permit the circulation of the brine through such pipe or coil during rotation of the said chamber, and also in case the same is stopped during the bottling operation.

My invention comprises novel details of improvement that will be more fully hereinafter set forth and then pointed out in the claims.

Reference is to be had to the accompanying drawings forming a part hereof, wherein

Fig. 1 is a side elevation of a bottling machine embodying my invention;

Fig. 2 is a partly broken plan view of Fig. 1;

Fig. 3 is a section on line 3, 3, in Fig. 2;

Fig. 4 is a sectional plan view on line 4, 4, in Fig. 3;

Fig. 5 is a partly broken plan view of my improved cooling fluid control means; and

Fig. 6 is an edge view of Fig. 5, partly in section on line 6, 6, in Fig. 5.

Similar numerals of reference indicate corresponding parts in the several views.

The bottling machine I have illustrated is of a well known character comprising a rotative liquid or beverage dispensing chamber 1 provided with bottle filling valved nozzles 2, the chamber being supported on a column 3 journaled to rotate upon a base 4, as usual. The bottle operating supports are indicated at 5, and at 6 is a gear connected with the column and in mesh with a pinion 7 for rotating the parts described. The pinion 7 may be driven in any suitable way, as by means of a shaft 8 carrying the pinion and provided with gear 9 in mesh with a drive pinion 10, which may be operated by a belt or pulley 11, or by an electric motor, in a well known way. The tank 12, pipes 13 connecting said tank with the chamber 1 and the air inlet pipe 14 with its fittings are indicated as usual. The other main parts of the machine illustrated are of the ordinary well known construction in this type of bottle filling machine.

At 15 is a pipe or coil associated with and shown located within the beverage chamber 1, being shown connected at one end with an inlet pipe 16 and with an outlet pipe 17 for cooling fluid, such as brine. The pipe 15 is shown in the form of a double tier of coils so that the inlet and outlet pipes 16 and 17, respectively, are connected with lower portions of the coil. Said pipes 16 and 17 at their opposite ends are connected with means to maintain communication with a supply of cooling fluid during rotation of said coil and pipes with the beverage chamber. For such purpose I provide a ring-like member 18 that is connected with the casing of head portion 19 of the apparatus by means of interposed supports 20 secured to said parts, whereby the member 18 will rotate with the casing and the chamber 1. The upper surface of ring-like member 18 is provided with groove 21 with which the pipe 16 communicates, by being suitably screwed to the member, and said surface of the member is also provided with a groove 22 to which the pipe 17 is connected, as by being screwed to the member, (Figs. 3 and 6). Upon the member 18 and closely fitted thereto by smooth parallel cooperating surfaces is a second ring-like member 23 which is provided with an annular groove in its under surface at 24 that opposes the groove 21, forming a complete annular channel *a* between said members, and the ring 23 is also provided with an annular groove 25 in its under surface that opposes the groove 22, providing a second complete annular channel *b* between the members, which channels are independent of one another. A pipe 26 is secured to member 23, as by screwing it thereto, to supply cooling fluid to the inner channel *a* for supplying the coil 15, and a

pipe 27 is secured to said member 23, as by screwing it thereto, and communicates with the channel *b* to exhaust the cooling fluid from the coil 15. The circulation of the cooling fluid or brine may be maintained by means of a pump, or in any other desired way. Suitable packing is provided between the members 18 and 23 to prevent leakage of the cooling fluid from the channels *a* and *b* at the peripheries of member 18 and from channel to channel. I have shown the member 18 provided with annular channels 28 containing suitable packing 29 to bear against member 23, and the member 23 provided with annular channels 30 containing packing 31 to bear against the member 18, during rotation of said member, (Fig. 6). The members 18 and 23 are also shown provided with the complemental packing 32 and projection 33 to keep the fluid from flowing between channels *a* and *b*, and marginal ribs 34 on member 18 enter the grooves 30 in member 23 and bear against the packing 31, serving to keep the members centered. The member 18 is rotatively guided along suitably spaced concentric rings 35 and 36, which are carried by the member 23 by means of bolts 37 extending from the member 23, whereby the members 18 and 23 are maintained in close rotative contact. By preference anti-friction balls 38 are located in annular grooves 39 and 40 in the rings 35 and 36, respectively, against which the member 18 bears for reducing friction between the parts when the member 18 rotates relatively to the member 23. Member 23 with the attached rings 35 and 36 is maintained from rotation, for which purpose I have illustrated arm 41 extending from a post 42 over the member 23, to which the forked end portions 41^a of the arm is attached by means of screws or the like 43. The central bores 18^a and 23^a in members 18 and 23 and the bore of ring 35 are in register so that the usual central air supply fittings of the bottling machine pass through and are rotative in said bores, as indicated in Fig. 3, so that my improvements do not in any manner interfere with the construction and operation of the ordinary bottling machine illustrated.

In accordance with my improvements the bottling machine operates in an ordinary way to charge the bottles with the beverage, carbonated water or the like, successively during rotation of the supply chamber 1 and the associate parts of the machine. The member 23, pipes 26 and 27, and the rings 35 and 36 remain stationary while the member 18, the coil 15 and its pipes 16 and 17 rotate with chamber 1, whereby cooling fluid may be caused to flow through said coil, such fluid from pipe 26 entering channel *a*, flowing therefrom through pipe 16, coil 15 and pipe 17 to channel *b*, whence the fluid flows outwardly through exhaust pipe 27. The cooling fluid in coil 15 will maintain the beverage, carbonated water or the like, in chamber 1 at the desired temperature during bottling, and also at such times as the rotation of chamber 1 may be stopped, whereby the carbonic acid gas in the water or beverage is thermally prevented from escaping therefrom. Such escape would occur were the water or beverage allowed to increase in temperature above about a desired degree in chamber 1, as always occurs in bottling machines in which the temperature of the carbonated water is not maintained at about a desired degree. By the means described carbonic acid gas is conserved since otherwise it would be liable to pass from chamber 1 with air that is usually maintained within said chamber through tank 12 and pipes 13 and 14.

While I have illustrated and described a particular construction for carrying out my invention, whereby the pipe or coil 15 may be continuously supplied with cooling fluid during operation of rotative parts of the machine, it will be understood that changes may be made in the details of construction and arrangement of parts set forth, within the scope of the appended claims, without departing from the spirit of my invention.

Having now described my invention what I claim is:—

1. A bottling machine comprising a rotative chamber for beverages and the like, a cooling pipe associated with the chamber to rotate therewith, cooperative members having means in communication with said pipe and with supply and exhaust pipes to maintain circulation of cooling fluid through said pipe during rotation of the chamber, one of said members being rotative with the chamber, means retaining the other member from rotation, and spaced rings carried by the last named member and supporting the rotative member.

2. A bottling machine comprising a rotative chamber for beverages and the like, a cooling pipe carried by the chamber to rotate therewith, cooperative members to supply cooling fluid to said pipe, said members having spaced opposing grooves providing independent channels therebetween, a pipe connecting one of said channels with one end of the first named pipe, a pipe connecting the other of said channels to the opposite end of the first named pipe, a supply pipe communicating with one of said channels, an exhaust pipe communicating with the other of said channels, means connecting one of said members with the machine for rotation with the chamber, and means retaining the other of said members from rotation.

3. A bottling machine as set forth in claim 2, provided with spaced rings cooperative with the rotative member to maintain it

in operative relation to the other member, and means connecting the last named member with said rings.

4. A bottling machine comprising a rotative chamber for beverages and the like, a cooling coil associated with the chamber, a pair of cooperative opposing members having channels therebetween, one of said members being connected with the machine to rotate with the chamber, means for retaining the other member stationary, a pipe connecting one of the channels with one end of the cooling pipe, a pipe connecting the other channel with the other end of the cooling pipe, a supply pipe connected with one of the channels, an exhaust pipe connected with the other channel, and means connected with the stationary member for maintaining the rotative member in cooperative relation thereto, said members being adapted to accommodate fittings for the supply of air to the chamber located within bores of said members.

5. A bottling machine comprising a rotative chamber for beverages and the like, a cooling pipe associated with the chamber, cooperative members having means in communication with the cooling pipe for supplying cooling fluid therethrough during rotation of the chamber and the cooling pipe, said means comprising a pair of members having registering bores adapted to accommodate supply fittings located within said bores and in communication with the chamber.

ALBERT F. HOFFMAN.