May 8, 1962 F. BUDRECK ET AL 3,034,025

PERMANENT MAGNET ASSEMBLIES AND QUICK RELEASE MECHANISMS THEREFOR

Filed June 10, 1959 3 Sheets-Sheet 1

Fig. 1

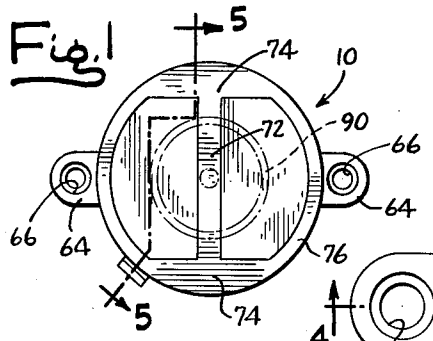

Fig. 2

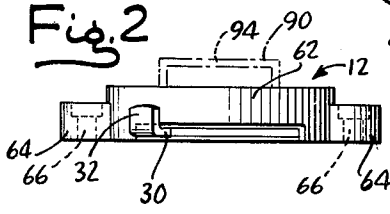

Fig. 3

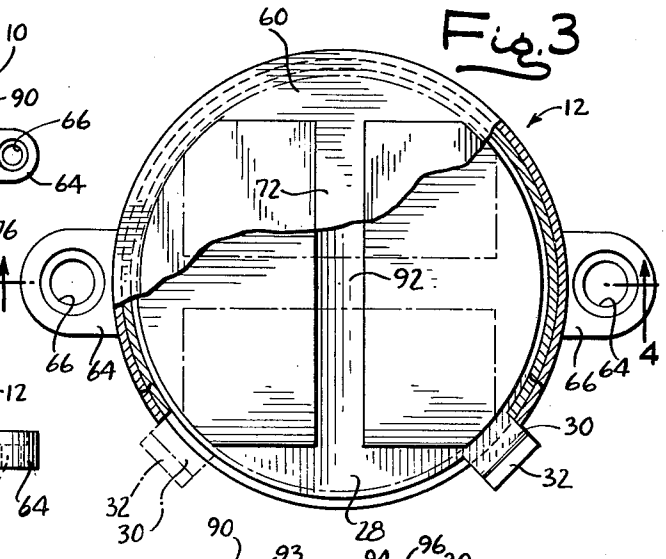

Fig. 4

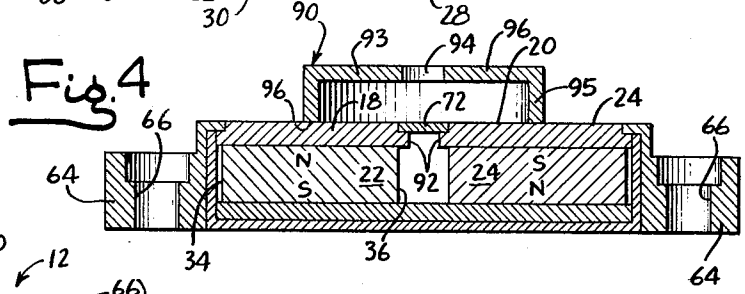

Fig. 6

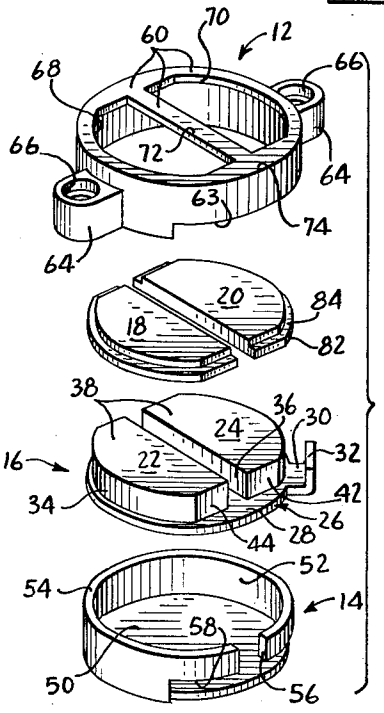

Fig. 5

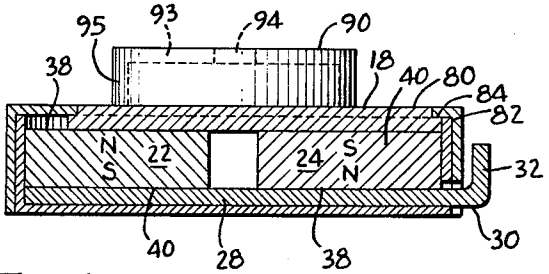

INVENTORS
FRANCES BUDRECK
AHMET K. BEY

BY

ATTY.

May 8, 1962 F. BUDRECK ET AL 3,034,025

PERMANENT MAGNET ASSEMBLIES AND QUICK RELEASE MECHANISMS THEREFOR

Filed June 10, 1959 3 Sheets-Sheet 2

Fig. 7

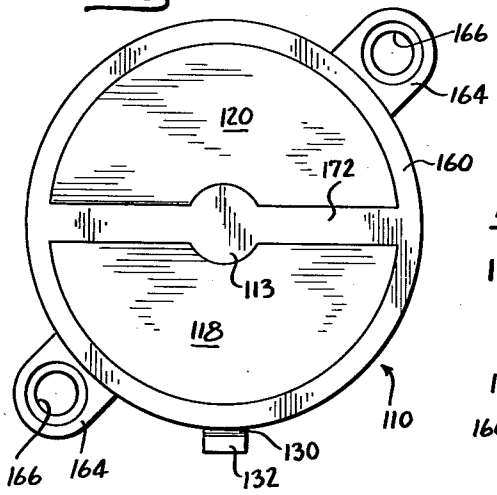

Fig. 9

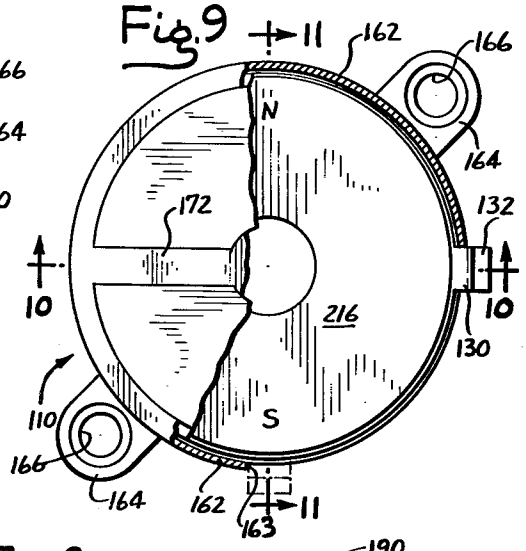

Fig. 8

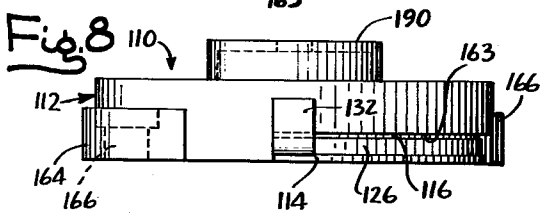

Fig. 10

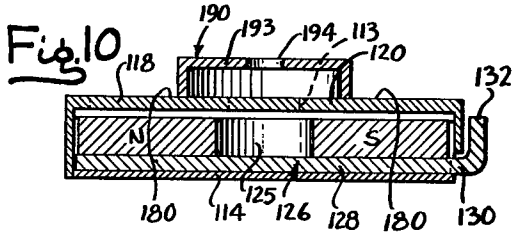

Fig. 12

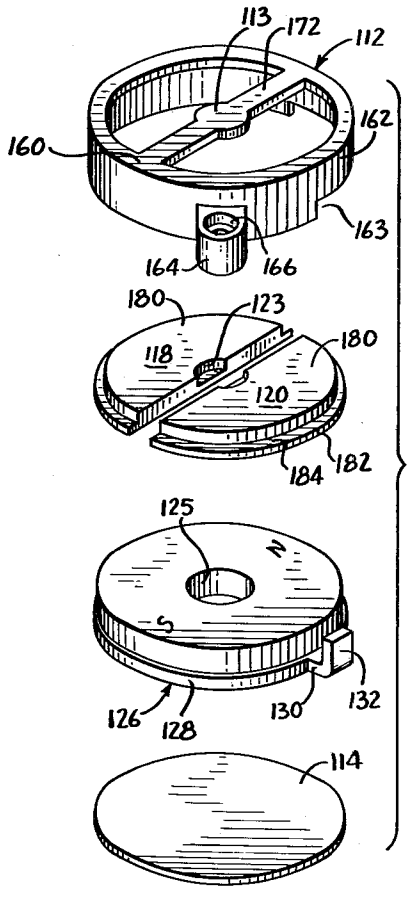

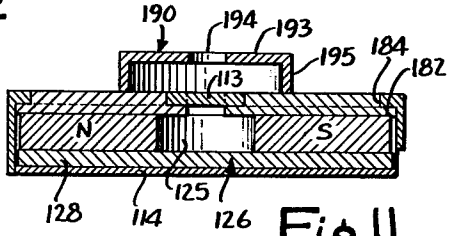

Fig. 11

INVENTORS
FRANCES BUDRECK
BY AHMET K. BEY
Norman Gerlach
ATTY.

May 8, 1962 F. BUDRECK ET AL 3,034,025

PERMANENT MAGNET ASSEMBLIES AND QUICK RELEASE MECHANISMS THEREFOR

Filed June 10, 1959 3 Sheets-Sheet 3

Fig. 13

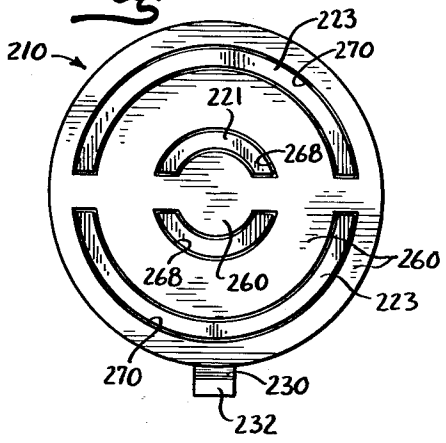

Fig. 15

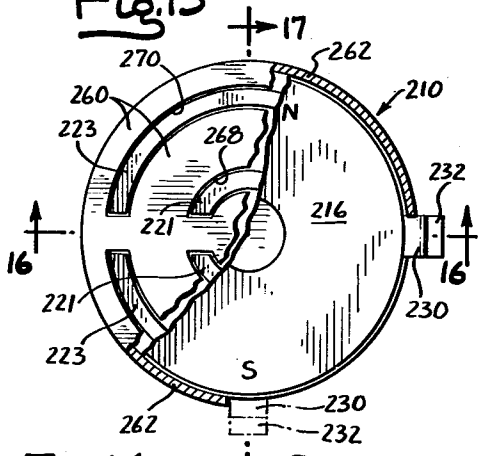

Fig. 14

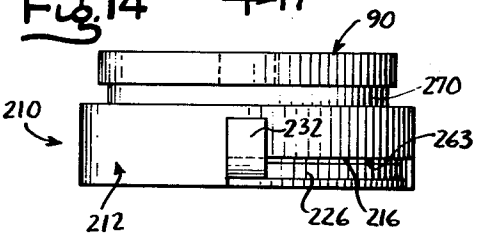

Fig. 18

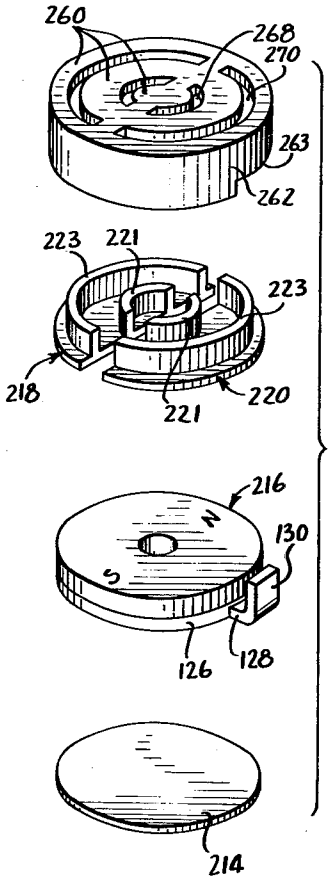

Fig. 16

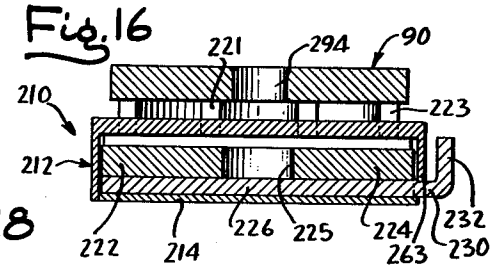

Fig. 17

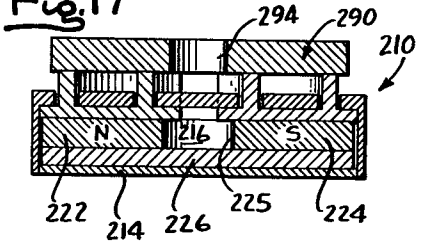

INVENTORS
FRANCES BUDRECK
BY AHMET K. BEY
ATTY.

United States Patent Office

3,034,025

Patented May 8, 1962

3,034,025

PERMANENT MAGNET ASSEMBLIES AND QUICK RELEASE MECHANISMS THEREFOR

Frances Budreck and Ahmet K. Bey, Chicago, Ill., assignors to Monarch Tool & Machinery Co., Chicago, Ill., a corporation of Illinois

Filed June 10, 1959, Ser. No. 819,507

2 Claims. (Cl. 317—159)

The present invention relates to improvements in permanent magnet holding assemblies and has particular reference to a so-called quick release magnetic holding assembly of the type wherein the attractive power of a permanent magnet may be varied by changing the reluctance of the magnetic circuit associated with the magnet.

It is a well known principle of magnetism that whenever a magnetic circuit made of iron or other magnetic material is broken by an air gap, the ends of the iron core on opposite sides of the gap will have opposite magnetic polarity due to the flux which flows in the iron magnetic circuit. In other words, flux magnetizes any magnetic material through which it may pass. Since the core ends which are on opposite sides of an air gap have opposite polarity, they tend to attract each other in accordance with the law of magnetism. Whenever a movable magnetic object is in or near a magnetic circuit, the object will tend to move to the position which gives maximum flux in the circuit. Thus, an iron object pivoted in an air gap will take a position wherein its longest dimension extends parallel to the lines of force in the air gap so that the greatest possible portion of the circuit is through iron. If such dimension is great enough to completely span the gap, the object will completely bridge the gap and create a condition of maximum flux wherein the air gap is eliminated and the magnetic circuit is entirely through iron or some other low reluctance material. The flux is thus concentrated and flows substantially in a closed iron or other low reluctance circuit and the attractive force of the poles with respect to magnetic material exclusive of the bridging object is reduced to practically nothing.

The above outlined phenomena according to the present invention, have been taken advantage of in a novel manner to produce a number of extremely effective releasing holding devices which depend for their effectiveness upon a reduction in the attractive power of the permanent magnets associated therewith and, consequently, upon a reduction in the holding power of the magnets.

Releasable holding devices constructed in accordance with the principles of the present invention will be found to have many applications, as for example in refrigerator or other cabinet door latches; lifting devices of the so-called quick pickup and release type where small objects of magnetic material, for example nails, pins and similar small hardware may be picked up in bulk at one location, transferred manually to another location and released at the second location; the releasable positioning of work in a magnetic chuck; the creation of a variable magnetic field for controlling the direction of electron beams, as for example in connection with certain electronic equipment such as television receivers, cathode ray oscilloscope devices and the like; the separation of magnetic materials from non-magnetic materials; the establishing of an artificial magnetic field in the vicinity of the movable magnetized armature of a compass to effect localized adjustment of the instrument; and for a

wide variety of other applications too numerous to mention. Irrespective however of the particular use to which the present invention may be put, the essential features thereof are at all times preserved.

A comparatively recent development in the field of permanent magnet construction and design is the so-called ceramic magnet of the mixed ferrite type, such magnets possessing greatly improved magnetic properties over permanent magnets which are constructed of metallic alloys. One such magnetic material of the mixed ferrous type or ceramic type is known as "Indox," a development of the Indiana Steel Products Company of Valparaiso, Indiana. This barium ferrite material is characterized by the fact that it is electrically non-conductive. The material is extremely resistant to demagnetizing influences and evidences very low eddy current losses. Indox is a magnetic material which exhibits extremely high coercive force, a low remanence and high permeability. Because of these characteristics of this permanent magnet material the magnetic length thereof need be but a fraction of that required for the ferrous alloys in attaining the same magnetic pull for a given magnet size. Where barium-ferrite ceramic materials are concerned, magnetic stability is pronounced and permanent magnets of this character maintain their magnetic strength despite weakening influences such as contact with extraneous magnetic fields and frequent removal and replacement of the magnetic armatures. Additionally, Indox and like ceramic materials are relatively light as compared to the magnetic alloys.

As a magnetic material for releasable holding purposes, the shape characteristics and small sizes which Indox and similar materials may assume for any given attractive power leave little to be desired. For example, such magnetic materials satisfy the requirements of releasable holding devices for refrigerator doors and the like where space is at a premium, where high holding power is required, and where frequent armature attraction and release is encountered. Physically, however, while such materials have satisfactory tensile strength, they lack the hardness and resistance to abrasion and compressional forces demanded in an otherwise excellent magnetic material. Furthermore, such materials are not altogether immune from corrosion in the presence of moisture.

Having available such a magnetic material with unique physical properties, especially short magnetic length, and other desirable physical properties except resistance to abrasion and compressional forces, the present invention contemplates the provision of a number of small, compact lightweight releasable holding devices including permanent magnets of the ceramic type, together with novel manually operable means whereby the reluctance of the magnetic circuit associated therewith may be varied at will as between a condition of maximum flux in the circuit and a condition of low flux concentration, such means consuming but very little space and increasing the overall size of the device but slightly so that the space consumed by the holding unit, considered as a whole, is not appreciably greater than the space consumed by the permanent magnet alone.

The provision of a releasable holding device which may thus be confined within a space considerably smaller than that occupied by conventional holding devices designed for the same purpose being among the principal objects of the invention, a further and important object is to provide a device wherein extremely small manual

effort is required to shift the device between its condition of maximum holding power or pull and its condition of release.

A further object of the invention, in a compact releasable holding device of the character briefly outlined above, is to provide a novel assembly of a permanent magnet, with other magnetizable and non-magnetizable parts wherein, when the device is conditioned for maximum holding power, the flux in the magnetic circuit is concentrated in a small contact area, thus making possible a high flux density and attaining increased magnet holding power.

Still another object of the invention is to provide such an assembly wherein the permanent magnetic material employed as the basis for magnetic attraction of the work is at all times effectively physically shielded from actual physical contact with the work, as well as from exposure to the ambient atmosphere in the vicinity of the device, thus reducing the danger of magnet fracture or corrosion.

With these and other objects in view which will become more readily apparent as the following description ensues, the invention consists in the novel construction, combination and arrangement of parts shown in the accompanying three sheets of drawings forming a part of this specification.

In these drawings:

FIG. 1 is a plan or front elevational view of one form of a releasable magnet holding assembly constructed in accordance with the principles of the present invention.

FIG. 2 is a side elevational view of the structure shown in FIG. 1.

FIG. 3 is an enlarged front elevational view, similar to FIG. 1, with certain parts of the assembly being shown in section to more clearly reveal the nature of the invention.

FIG. 4 is a sectional view taken substantially along the line 4—4 of FIG. 1.

FIG. 5 is an enlarged sectional view taken substantially along the line 5—5 of FIG. 1.

FIG. 6 is an exploded perspective view showing the principal parts or composite assemblies associated with the device in their relative positions of orientation in the structure.

FIG. 7 is a plan view, similar to FIG. 1, showing a modified form of releasable magnet holding assembly.

FIG. 8 is a side elevational view of the structure shown in FIG. 7.

FIG. 9 is a front elevational view, similar to FIG. 7, with certain parts of the assembly being shown in section to more clearly reveal the nature of the modified form of the invention.

FIG. 10 is a sectional view taken substantially along the line 10—10 of FIG. 9.

FIG. 11 is a sectional view taken substantially along the line 11—11 of FIG. 9.

FIG. 12 is an exploded perspective view showing the principal parts or assemblies associated with the device of FIG. 7 in their relative positions of orientation in the structure.

FIG. 13 is a plan view, similar to FIGS. 1 and 7, showing a further modified form of releasable holding magnet assembly.

FIG. 14 is a side elevational view of the structure shown in FIG. 13.

FIG. 15 is a plan view, similar to FIG. 13 with certain parts being shown in section to more clearly reveal the nature of the structure.

FIG. 16 is a sectional view taken substantially along the line 16—16 of FIG. 15.

FIG. 17 is a sectional view taken substantially along the line 17—17 of FIG. 15, and

FIG. 18 is an exploded view showing the principal parts or assemblies associated with the device of FIG. 13 in their relative positions or orientation in the structure.

Referring now to the drawings in detail and in particular to FIGS. 1 to 6 inclusive, wherein one form of the invention has been illustrated, the releasable holding magnet assembly has been designated in its entirety at 10 and involves in its general organization four principal parts or composite sub-assemblies including an outer shell or casing 12 (see particularly FIG. 6), an inner retainer or cage 14, an oscillatable magnet assembly 16, and a pair of pole pieces 18 and 20. The parts 12 and 14 are formed of a suitable non-magnetic material such as aluminum for example, while the pole pieces 18 and 20 are formed of magnetic material such as soft steel.

The magnet assembly is comprised of a pair of magnets proper 22 and 24, mounted on a magnet base 26 in the form of a thin circular plate or disk 28 which is provided with a radially extending manipulating arm or lever 30 on the periphery thereof and which has an upturned distal end 32. The function of the plate 28 and its manipulating lever will be set forth in detail presently. The two magnets 22 and 24 are identical in construction, each consisting of a body of generally semi-cylindrical design and of relatively short width or height. The magnets 22 and 24 are formed with cylindrical side surfaces 34, planar vertically disposed side faces 36, horizontal pole faces 38 and 40 respectively, and planar end faces 42 and 44 which extend in parallelism and which constitute truncations of the magnet ends. The two magnets 22 and 24 are of the mixed ferrite ceramic type, which is to say the same may be formed of Indox or similar magnetic material, the high coercive force, low permeability and other physical properties of which have been set forth in considerable detail above.

The two identical magnets 22 and 24 are fixedly secured in spaced relationship to the magnet base 28 with the planar side faces 36 thereof being spaced apart and extending in parallelism, and with one of the magnets being inverted relative to the other magnet, which is to say that in the assembly 26 the face 38 of the magnet 22 constitutes the top face thereof while the face 40 constitutes the top face of the magnet 24. The magnet 22 is secured to the upper face of the circular plate 28 by bonding with a suitable adhesive as for example, an air drying glue such as Pliobond, a product of the Goodyear Tire and Rubber Company, EC–1428, a product of Minnesota Mining & Manufacturing Company, or any one of numerous cements such as a Versamid, a product of General Mills Corporation, or Epon 828, a product of Shell Chemical Corporation.

The orientation of the two permanent magnets 22 and 24 on the backing plate or base 26 is such that the free or distal faces 38 and 40 respectively present north and south magnet poles as indicated by the legending in FIGS. 4, 5 and 6. The base 26 is formed of a magnetic material such as mild steel and this base materially increases the efficiency of the magnet by reducing the magnetic circuit reluctance.

The magnet assembly 16 is mounted for sliding oscillatory movement in opposite directions within the inner retainer or cage 14. Accordingly, the cage 14 is of cup-shape design and includes a circular bottom wall 50, from which there projects upwardly a cylindrical marginal side wall or flange 52, presenting an upper rim 54. The wall 52 is formed with a T-slot including a vertical leg 56 and a horizontal leg 58 intersecting the vertical leg. The cylindrical disk-like portion 28 of the magnet base 26 is disposed within the confines of the cylindrical wall 52 and has its underneath face loosely positioned on the upper face of the bottom wall 50 of the cage 14 in coextensive face-to-face sliding contact therewith and with the arm 30 projecting outwardly through the horizontal leg 58 of the T-slot as best seen in FIG. 5 for purposes that will be made clear presently.

The outer casing or shell 12 which is formed of a non-magnetic material such as aluminum is of inverted cup-shape design and includes a top wall 60 and a depending

cylindrical side wall 62 in the marginal regions of the top wall 60. The side wall 62 is slotted as at 63 for registry with the slot 58 when the parts 12 and 14 are operatively assembled upon each other. Attachment ears or lugs 64 are formed at diametrically opposed regions on the side wall 62 exteriorly of the shell and these ears are formed with countersunk holes 66 for reception therethrough of suitable fastening screws (not shown) by means of which the entire assembly 10 may be secured in position on the jamb portion of a refrigerator door, for example, or in any other operative position where the same may cooperate with a movable armature for releasably holding the same. The top wall 60 is formed with two generally semi-cylindrical openings 68 and 70 therethrough, the openings being of a configuration which is substantially conformable to the configuration of the horizontal cross sectional shape of the permanent magnets 22 and 24, these openings defining therebetween a transverse diametrically extending strut or separator strip 72. Webs 74 connect the ends of the strip 72 to the wall 62 and, in combination with the strip 72, constitute portions of the top wall 60.

The cage 14 is telescopically received with a snug fit within the inverted cup-shape shell 12 as best seen in FIGS. 4 and 5, and the rim 54 of the cylindrical wall 52 abuts against the underneath surface of the top wall 60 of the shell 12. The pole pieces 18 and 20, which are formed of magnetic material such as mild steel, fit within the openings 68 and 70 respectively and have their upper planar faces 80 substantially flush with the upper face of the top wall 60, thus affording a degree of physical protection to the magnet bodies against any shock which might otherwise be transmitted thereto through the pole pieces upon slamming of the magnet armature. A marginal flange 82 on each pole piece 18 and 20, underlies the rim region of the respective opening within which the pole piece is disposed and affords an upwardly facing shoulder 84 which bears against the underneath face of the top wall 60 and maintains the pole pieces within the openings against outward displacement therefrom.

By virtue of the loose fit of the circular disk 28 within the confines of the cylindrical side wall 52 of the magnet cage 14, the magnet base 26 is, in effect, rotatably journalled within the cage for oscillatory movement between one extreme position wherein the manipulating arm or lever 30 assumes the full line position shown in FIG. 4 with this arm bearing against the extreme right hand end of the horizontal leg 58 of the T-slot, and another extreme position wherein the manipulating arm 32 assumes the dotted line position of FIG. 3 with the arm bearing against the extreme left hand end of the leg 58 of the T-slot. In the former full line position, of the base plate or disk 28, the two magnets 22 and 24 substantially coextensively underlie the two pole pieces 22 and 24 respectively and lie within the vertical confines of the same as clearly shown in FIG. 4. Since both the magnet assembly 16 and the pole pieces 18 and 20 are retained within the assembly with a loose fit, the pole pieces will be drawn toward the faces or poles 38 and 40 and these parts will move freely to align themselves. With the pole pieces in contact with the poles 38 and 40, improved holding power is attained by the pole pieces upon contact with an armature such as the armature shown at 90 in FIGS. 4 and 5.

In the absence of the armature 90, and, due to the presence of the high reluctance non-magnetic gap at 92 the path of the magnetic flux in the magnetic circuit of the magnet assembly 16 is through the magnetic base 26, the magnet bodies 22 and 24 and across the non-magnetic gap 92, at which gap a high reluctance exists. The attractive power of the assembly 16 is thus at a maximum and any magnetic object encountering the magnet field will be attracted to the poles 38 and 40 so that a condition of maximum flux will obtain in the magnetic circuit wherein the greatest possible portion of the circuit is through magnetic material. If the assembly 10 is employed for releasably holding a refrigerator door or the like, it is preferable that an armature such as the armature 90 be fixedly secured to a distal region on the swinging door for horizontal registry with the assembly 10 when the door is in its closed position.

The armature 90 illustrated herein is of circular cup-shape design and includes a circular disk-like body portion 93 having a central screw-receiving opening 94 therein and a marginal wall or apron 95 presenting a narrow annular rim 96 designed for direct contact with the outer faces of the pole pieces 22 and 24. The narrow rim 96 serves to concentrate the flux in a small contact area to attain high flux density and consequent increased holding power.

In the dotted line position of the armature base 26 wherein the arm 30 engages the left hand end of the horizontal leg 58 of the T-slot as viewed in FIG. 6, the two magnets 22 and 24 assume positions wherein they traverse or bridge the non-magnetic gap 92 and destroy this gap so as to complete a ferrous or other low reluctance path for the magnetic flux in the magnetic circuit. In this position of the magnets 22 and 24, little or no attractive power remains above the pole pieces 18 and 20 for holding purposes and thus the assembly 10 as a whole is possessed of little or no holding power.

In actual practice it has been found that with the design of the magnets 22 and 24 and pole pieces 18 and 20 illustrated in FIGS. 1 to 6 inclusive, a slight magnetic pull may be exerted on the armature 90 when the latter is in contact with the pole pieces 22 and 24 when the magnet assembly 16 assumes its full line position as shown in FIG. 3. This phenomenon may exist due to the fact that the two magnets 22 and 24 are not completely bridged by the pole pieces 18 and 20 inasmuch as the non-magnetic strip 72 extends across the central regions of these poles. Additionally, a small amount of the flux may lie outside the confines of the pole pieces due to a condition of magnetic saturation. In the case of a refrigerator door or other similar installation, this small amount of residual attraction maintained by the magnetic holding device when the latter is in its condition of release may be overcome by biasing the door away from its fully closed position by the use of a suitable biasing spring or the like. The strength of the spring employed for this purpose will be insufficient to move the door away from its fully closed position when the holding device is in its holding position or in any intermediate position other than its condition of release.

In the form of the invention shown in FIGS. 7 to 12 inclusive, the principles of operation remain substantially the same as in the form of the invention shown in FIGS. 1 to 6 inclusive and the structure involved is likewise similar. Thus, to avoid needless repetition of description, similar reference numerals but of a higher order have been applied to the various parts in the latter group of views which correspond to similar parts in the former group of views.

As best seen in FIG. 12, the releasable holding magnet assembly 110 includes an outer shell or casing 112 similar to the casing 12 and differing therefrom only by the provision of a central hub or enlargement 113 on the diametrically disposed strip or strut 172 and by the omission of the webs 74 on the casing or shell 12. The pole pieces 118 and 120 likewise remain substantially the same as the pole pieces 18 and 20 but have shallow recesses 123 formed in their upper faces along the juncture between these faces and the straight planar vertical sides thereof. The recesses 123 are adapted to receive therein the enlargement 113 when the pole pieces are inserted within their respective openings 168 and 170 in the top wall 160 of the shell 112. The provision of the recesses 123 permit a substantial coplanar extent of the top wall 160 and the upper faces 180 of the pole pieces, as shown in FIGS. 8, 10 and 12. The magnet cage of the form of the invention shown in FIGS. 1 to 6 inclusive has been omitted and in its place there has been substituted a bottom closure 114 for the shell 112, this closure being tele-

scopically received within the lower rim of the shell and being cemented or otherwise secured in position within the rim.

The magnet assembly 116 includes a magnet backing or base plate 126 similar to the base plate 26 and mounted on the base plate by means of a suitable adhesive is a single magnet proper 122 in the form of a ring of barium-ferrite ceramic type magnetic material which has been magnetized as indicated by the legending in FIGS. 9, 11 and 12 inclusive so as to have north and south magnetic poles at diametrically opposed regions thereon. The magnet 122 is formed with a central hole or opening 125 therethrough which underlies the hub 113 provided on the strip 172 when the various parts of the assembly are in their operative positions.

In the form of the invention just described, the magnet assembly 116 is capable of being rotated between the dotted and full line positions shown in FIG. 9. In the full line position of the magnet assembly, the pole pieces are polarized in conformity to the respective magnet poles which they overlie and full attractive power with respect to the armature 190 is effective to attract the latter. When the magnet assembly 116 is in its dotted line position, the poles of the magnet are bridged and the soft steel pole pieces lose their polarity and the attractive force thereof is reduced to substantially ineffective proportions.

Referring now to FIGS. 13 to 17 inclusive wherein another modified form of the invention has been shown, again the principles of operation remain substantially the same as in the previously described forms of the invention so that needless repetition of description may be avoided by the use of reference numerals which are similar in the case of corresponding parts but which are of a still higher order than those displayed in connection with FIGS. 7 to 12 inclusive.

In this latter form of the invention the outer shell or casing 212 is similar to the casing 12 but the generally semi-circular openings 68 and 70 have been omitted and, instead, the top wall 260 of the shell is formed with an inner pair of arcuate slots 268 and an outer pair of arcuate slots 270, all of the slots being concentric. The pole pieces 218 and 220 are each in the form of flat, generally semi-circular plates formed of mild steel or other magnetic material and having formed on the upper face thereof an inner pair of arcuate raised ribs 221 and an outer pair of arcuate raised ribs 223, all of the ribs being concentric and being conformable in size and curvature to the arcuate slots 268 and 270 respectively. The magnet assembly 216 remains identical with the assembly 116 while the bottom closure 214 remains identical with the closure 114.

In the assembly of the various parts shown in FIG. 18, the ribs 221 and 223 project completely through the corresponding slots 268 and 270 as clearly shown in FIGS. 17 and project upwardly above the plane of the top wall 260 of the shell 212. The position of maximum attraction of the releasable holding magnet assembly 210 is shown in full lines in FIG. 15 while the position of release is shown in dotted lines in this view.

The assembly 210 is designed for use in connection with an armature 290 which presents a flat face such as the face 292 directly to the projecting ribs 221 and 223 of the pole pieces 218 and 220. The ribs 221 and 223 are formed with relatively narrow forward or distal edges 294, which serve to concentrate the flux in a small contact area and thus attain maximum flux density and increased attractive power.

While three specific embodiments of a releasable magnet holding assembly constructed in accordance with the principles of the present invention have been shown and described herein for illustrative purposes, it will be understood that these illustrated forms do not by any means indicate all of the different forms of apparatus suitable for the functions intended. The illustrated forms are merely those which have been developed for commercial application of the invention and various other forms thereof are contemplated.

Having thus described the invention, what we claim and desire to secure by Letters Patent is:

1. In a releasable permanent magnet assembly for releasably attracting an armature, a generally cylindrical cup-shaped shell of non-magnetic material having spaced parallel top and bottom walls and a marginal interconnecting cylindrical side wall, a circular magnet-supporting disk formed of magnetic material slidably supported on said bottom wall within the confines of said wall and freely rotatable about the axis of the shell in opposite directions, said top wall being formed with two pairs of circumferentially spaced diametrically opposed arcuate slots therethrough, the slots of each pair being concentric about the axis of the shell and being disposed at a different radial distance from the slots of the other pair, one slot of each pair of slots being disposed wholly on one side of a common plane which bisects the cylindrical shell and is coincident with the longitudinal axis of the latter, two spaced apart flat pole pieces formed of magnetic material underlying said top wall, each pole piece being formed with raised arcuate ribs which project upwardly through and substantially fill one arcuate slot of each pair and extend upwardly beyond said top wall, a substantially flat, thin, disk-like permanent magnet having a smaller axial dimension than its radial dimension and presenting oppositely facing flat faces, said magnet being magetized to provide magnetic pole surfaces of opposite polarity on opposite sides of a diametrically extending axis, said magnet being supported on and movable bodily with said disk and arranged for sliding contact with the underneath faces of said pole pieces, said magnet-supporting disk and magnet being movable bodily as a unit between one extreme position wherein said pole pieces overlie and are wholly within the vertical confines of respective surfaces of the magnet pieces and another extreme position wherein said pole surfaces are bridged by said pole pieces, and an actuating member connected to said disk and accessible exteriorly of the shell for shifting the disk and magnet between their extreme positions.

2. A permanent holding magnet assembly for attracting an armature, said assembly comprising a generally cylindrical cup-shaped shell of non-magnetic material having spaced circular top and bottom walls and a marginal interconnecting cylindrical side wall, said top wall being formed with a pair of diametrically opposed narrow arcuate slots therein arranged on opposite sides of a diametrical axis of the top wall, each of said slots being slightly less than 180° in arcuate extent and the two slots being disposed circumferentially about a common center coinciding with the center of the circular top wall, a pair of generally flat thin generally semi-circular pole pieces disposed within said shell and closely underlying said top wall in diametrically opposed relationship, each pole piece having a raised arcuate rib projecting through and substantially filling each of said slots and extending above the level of the top wall to thus define a narrow flux-concentrating edge, said pole pieces being spaced apart on opposite sides of said diametrical axis of the top wall, a substantially flat, thin, disk-like permanent magnet of the barium ferrite type having a smaller axial dimension than its radial dimension and presenting oppositely facing flat faces, one face of said magnet being magnetized to provide magnetic pole surfaces of opposite polarity on opposite sides of a diametrically extending axis, said magnet being movably disposed within said shell and bridging the distance between said bottom wall of the shell and said pole pieces, said one face of the magnet being disposed in direct opposition to said pole pieces, said magnet being movable between one extreme position wherein said pole pieces overlie and are disposed wholly within

the vertical confines of respective pole surfaces of the magnet and another extreme position wherein said pole surfaces are effectively bridged by said pole pieces, the side wall of said shell being formed with an arcuate slot therein, and an actuating arm connected at its inner end to said magnet and projecting radially outwardly through said slot in the shell side wall.

References Cited in the file of this patent

UNITED STATES PATENTS

2,104,472	St. Clair et al.	Jan. 4, 1938
2,287,286	Bing et al.	June 23, 1942
2,866,889	Dempsey	Dec. 30, 1958
2,888,617	Baumet	May 26, 1959